Dec. 22, 1964 T. C. TOMPERS 3,162,188

FIREPLACE FRONT OR FIXTURE

Filed June 6, 1962 2 Sheets-Sheet 1

Fig. 1

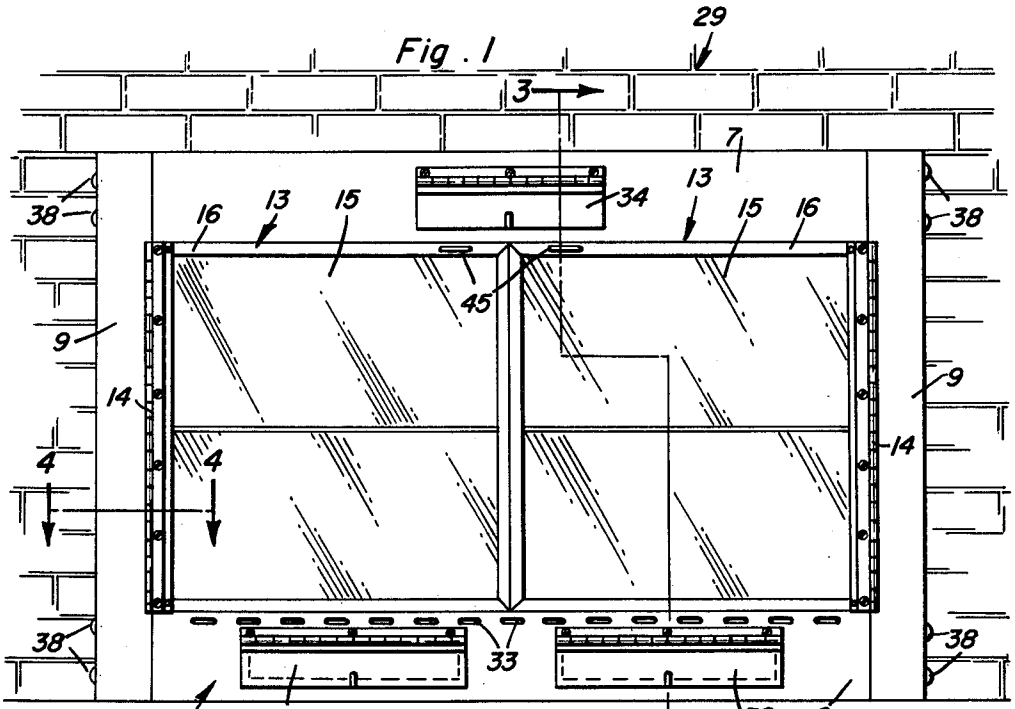

Fig. 2

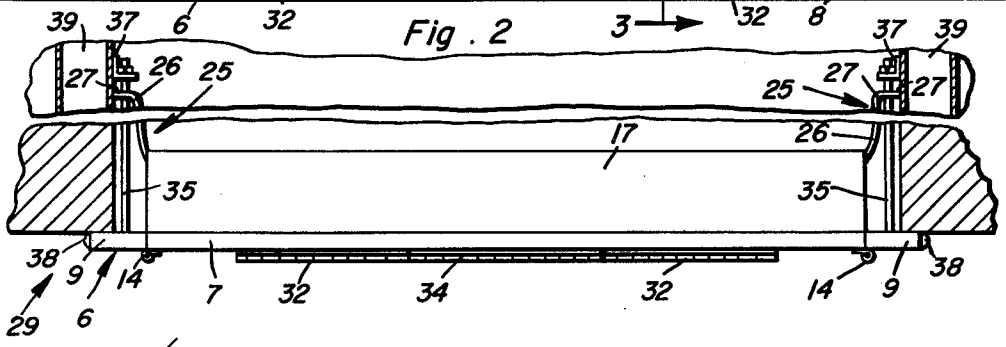

Fig. 6

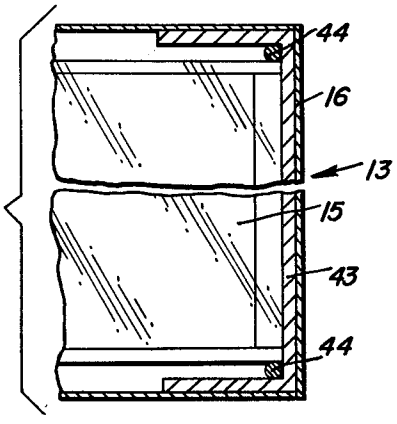

Theodore C. Tompers
INVENTOR.

BY Thomas A. O'Brien and Harvey B. Jackson
Attorneys

Dec. 22, 1964 T. C. TOMPERS 3,162,188

FIREPLACE FRONT OR FIXTURE

Filed June 6, 1962 2 Sheets-Sheet 2

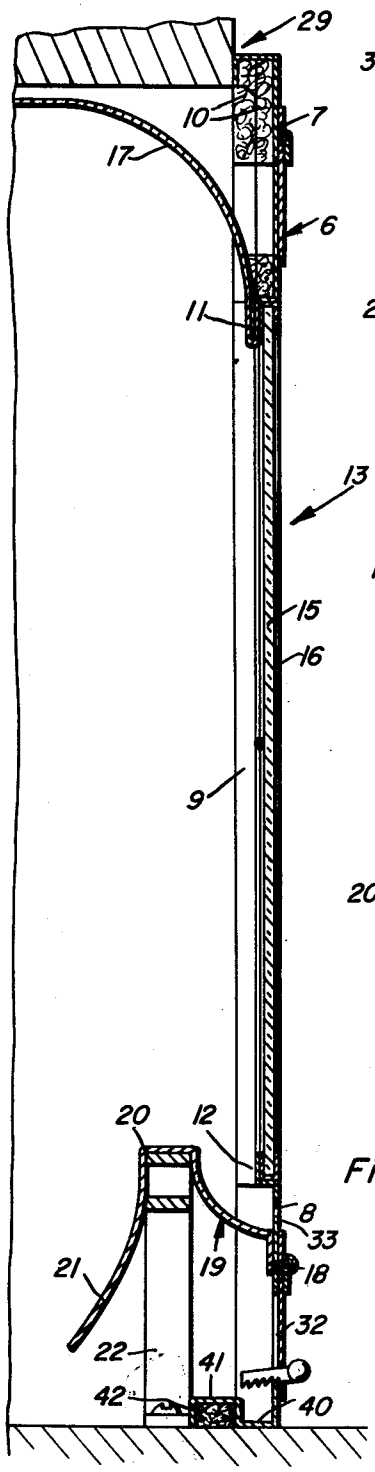

Fig. 3

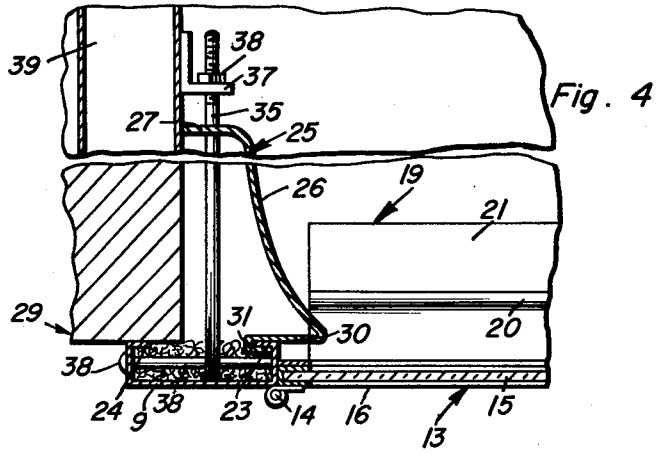

Fig. 4

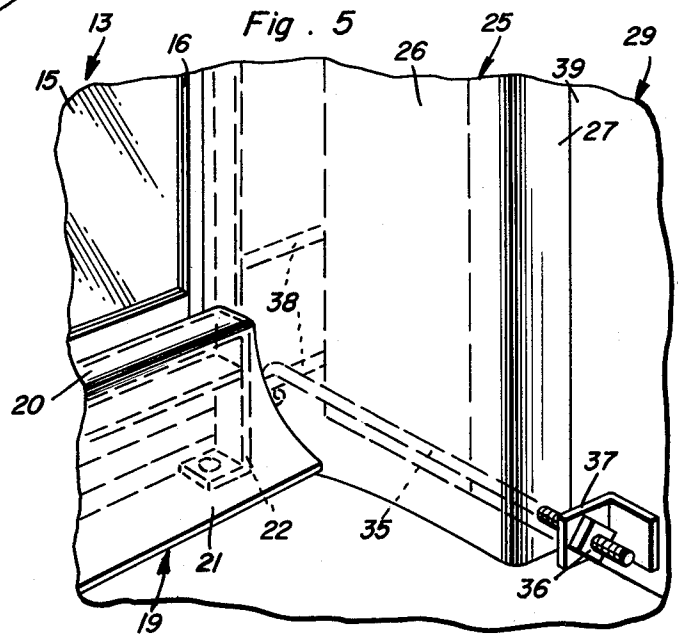

Fig. 5

Theodore C. Tompers
INVENTOR.

BY Thomas A. O'Brien and Harvey B. Jacobson
Attorneys

United States Patent Office 3,162,188 Patented Dec. 22, 1964

3,162,188

FIREPLACE FRONT OR FIXTURE

Theodore C. Tompers, 185 N. Fairfield Ave., Susanville, Calif.

Filed June 6, 1962, Ser. No. 200,386
4 Claims. (Cl. 126—140)

This invention relates to new and useful improvements in fireplace fronts or fixtures of the type revealed by U.S. Patent No. 2,707,946, issued May 10, 1955, and has for its primary object to provide, in a manner as hereinafter set forth, novel means for shielding the doors and frame from soot thus greatly decreasing the frequency of cleaning the unit thereby saving considerable time and labor.

Another important object of the present invention is to provide a fireplace front of the aforementioned character wherein the soot and heat shield may be installed on units which are already in use or incorporated therein at the factory.

Still another important object of the invention is to provide a fireplace front or fixture of the character set forth comprising a novel combination and arrangement of dampers or drafts for controlling the fire.

Other objects of the invention are to provide an improved fireplace front which is simple in construction, strong, durable, compact, of light weight, attractive in appearance and which may be manufactured and installed at low cost.

These together with other objects and advantages which will become subsequently apparent reside in the details of construction and operation as more fully hereinafter described and claimed, reference being had to the accompanying drawings forming a part hereof, wherein like numerals refer to like parts throughout, and in which:

FIGURE 1 is a front elevational view, showing an improved fireplace front constructed in accordance with the present invention installed;

FIGURE 2 is a top plan view of the invention, showing portions of the side walls of a fireplace in horizontal section;

FIGURE 3 is a vertical sectional view on an enlarged scale, taken substantially on the line 3—3 of FIGURE 1;

FIGURE 4 is a fragmentary view in horizontal section on an enlarged scale, taken substantially on the line 4—4 of FIGURE 1;

FIGURE 5 is a rear perspective view of a lower corner portion of the device; and

FIGURE 6 is a fragmentary view in vertical section through a portion of one of the doors.

Referring now to the drawing in detail, it will be seen that the embodiment of the invention which has been illustrated comprises a rectangular frame of suitable metal and which is designated generally by reference numeral 6. The frame 6 comprises top, bottom and side rails 7, 8 and 9, respectively, which, in the assembly shown, are secured together by suitable elongated bolts or other fasteners 38. The frame rails or members 7, 8 and 9 are substantially channel-shaped and may have mounted therein a suitable heat insulating and fireproofing material 10. The top rail 7 of the frame 6 includes a flange 11 on its lower edge which depends into the opening defined by said frame. A substantially similar upstanding flange 12 is provided on the upper portion of the bottom rail 8. The bottom rail 8 further includes a horizontal base flange 40 comprising an inverted channel portion 41 having therein a fibreglass dust and ash seal 42.

A pair of doors 13 are pivotally mounted for swinging movement in a horizontal plane on the frame 6 through the medium of piano-type hinges 14. The hinges 14 mount the doors 13 on the side rails 9 of the frame

6. The doors 13 include transparent panes 15 mounted in frames 16 of U-shaped cross-section and also of suitable metal. The doors 13 further include generally U-shaped reinforcing bars 43 in the inner or hinged end portions of the frames 16. Corner bolts 44 in the frames 16 retain the reinforcing bars 43 in position. The top portions of the doors 13 are provided with handles 45. A stop flange (not shown) is provided on the free end of one of the doors for preventing the passage of air between the doors when said doors are in closed position.

Affixed to the flange 11 and extending upwardly and rearwardly therefrom is a protective shield in the form of a baffle 17 of arcuate cross-section. It will be noted that the baffle 17 extends from the flange 11 on the lower portion of the top rail 7 of the frame 6 to the top of the fireplace 29.

Secured at 18 on the back of the bottom rail 8 is a rearwardly and upwardly curved baffle 19. The baffle 19 includes a reversely folded, generally inverted U-shaped intermediate portion 20 and terminates in a downwardly and rearwardly curved end portion 21. A standard or the like 22 is engaged in the portion 20 of the baffle 19 for supporting said baffle should a log be dropped thereon.

As shown to advantage in FIGURE 4 of the drawing, the side rails 9 comprise inturned inner and outer longitudinal marginal flanges 23 and 24, respectively. Mounted on the rails 9 are side baffles 25. The side baffles 25 include panels or portions 26 of arcuate cross-section having outwardly bent rear marginal portions 27. The front portions of the side baffles 25 are acutely bent outwardly in a manner to provide flanges 30 which are opposed to the rails 9 and which are reversely bent and interlocked and sealed as at 31 with the flanges 23 for mounting said baffles 25 on said side rails for preventing any side drafts which may enter between the side members 9 of the frame 6 and the fireplace front from reaching the door panes 15.

The bottom rail 8 of the frame 6 is provided with a pair of fire drafts or dampers 32. Above the dampers 32 and the portion 18 of the baffle 19, the bottom rail 8 is further provided with a series of air inlet slots 33.

The frame 6 is secured in position on the front of the fireplace 9 in the manner shown in FIGURE 4. In the installation shown, elongated threaded rods or the like 35 have one end hooked over certain of the fasteners 38. The rods 35 pass through apertures in the flanges 27 and brackets 37 provided therefor on the heatilator 39 of the fireplace 29 and have threaded thereon retaining nuts 36.

It is thought that the operation of the invention will be readily apparent from a consideration of the foregoing. Briefly, as the heated smoke and soot-laden air circulates in the fireplace, said air flows forwardly along the walls thereof and is caused to swirl toward the center and then rearwardly by the arcuate top, bottom and side baffles 17, 19 and 25, respectively. Clean air enters through the slots 33 and is directed upwardly in a broad stream behind the doors 13 by the upwardly and rearwardly curved portion of the baffle 19. The construction, combination and arrangement of parts is such that little or not soot is deposited on the doors and frames, thus necessitating much less frequent cleaning. Also, by protecting the frames in the manner described discoloration from the heat is avoided. The drafts 32 provide air to the fire for promoting combustion in the usual manner. The damper 34 is normally closed. To check or subdue the fire, the drafts 32 are closed and the damper 34 is opened.

The foregoing is considered as illustrative only of the principles of the invention. Further, since numerous modifications and changes will readily occur to those skilled

in the art, it is not desired to limit the invention to the exact construction and operation shown and described, and accordingly all suitable modifications and equilvalents may be resorted to, falling within the scope of the invention as claimed.

What is claimed as new is as follows:

1. A fireplace front comprising a frame defining an opening and including top, bottom and side rails, doors for the opening hingedly mounted on said side rails, a soot shield for the frame and the doors mounted on the back of said frame, said shield including top, bottom and side baffles mounted on the corresponding rails, at least one fire draft damper mounted on the bottom rail, and a damper mounted on the top rail to be opened when the first-named damper is closed for checking combustion in the fireplace, said bottom rail having air inlet openings therein between the bottom baffle and the frame opening, said bottom baffle including a rearwardly and upwardly extending portion for deflecting air from the inlet openings upwardly behind the doors and further including an inverted U-shaped intermediate portion, and an upstanding support for the bottom baffle engaged in said inverted U-shaped intermediate portion thereof.

2. The fireplace front of claim 1 wherein said bottom rail includes means defining a downwardly opening and

longitudinally extending channel portion having seal means disposed therein adapted to form a dust and ash seal between said bottom rail and the floor of a hearth upon which said fireplace front is supported.

3. The fireplace front of claim 2 wherein said top and side rails include rearwardly opening and longitudinally extending channel portions having seal means disposed therein adapted to form a dust and ash seal between said frame and the outer surfaces of the portions of a fireplace wall defining a fireplace opening therein.

4. The fireplace front of claim 1 wherein the portions of said frame defining said frame opening include coplanar flange portions projecting into and extending about said opening which overlap the rear surfaces of the corresponding portions of said doors when said doors are in their closed positions.

References Cited by the Examiner

UNITED STATES PATENTS

2,350,293	5/44	Stanchfield	126—21 X
2,398,240	4/46	Merryweather et al.	126—140
2,707,946	5/55	Merryweather et al.	126—140
2,743,720	5/56	Dollinger	126—140 X

JAMES W. WESTHAVER, *Primary Examiner.*