(No Model.)

T. KUNDTZ.

TABLE OR CABINET FOR SEWING MACHINES.

No. 590,417. Patented Sept. 21, 1897.

-FIG. I-

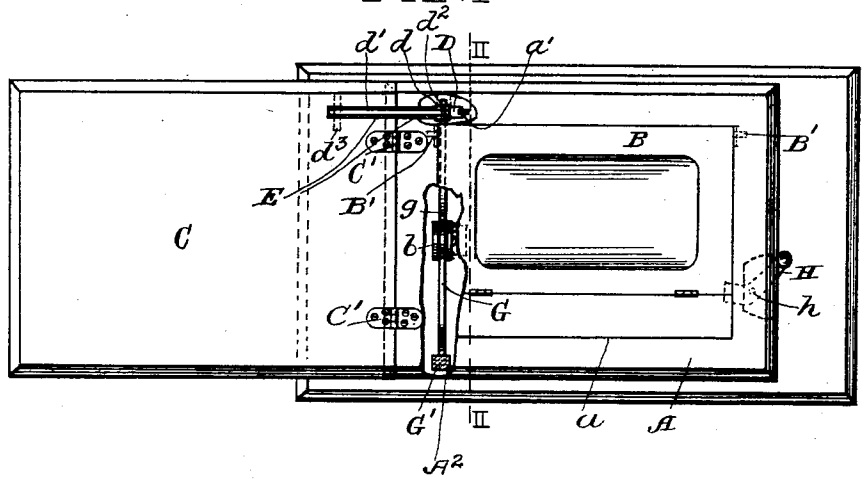

-FIG. II-

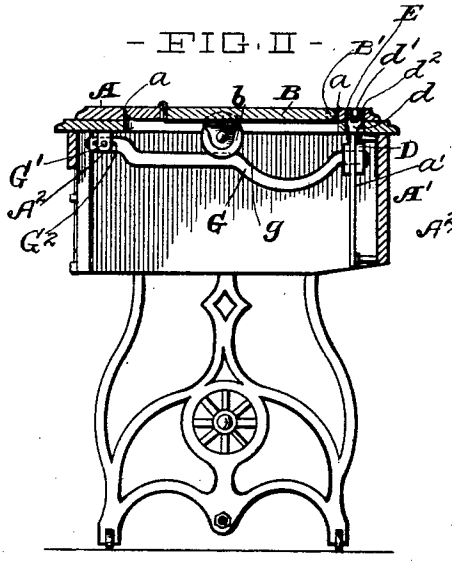

-FIG. III-

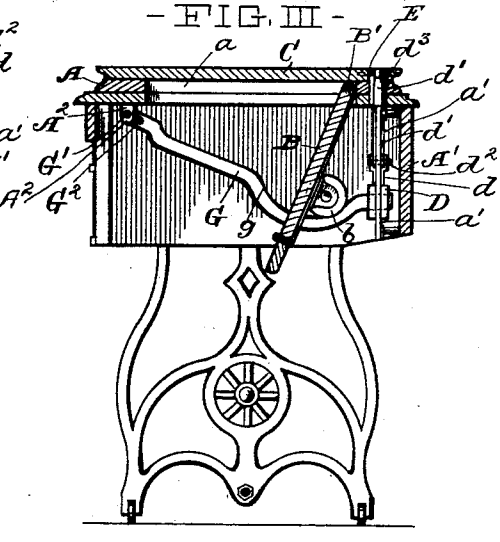

WITNESSES:
Ella E. Tilden
L. Ward Stover.

INVENTOR
Theodor Kundtz
BY
Lynch, Dorer & Donnelly
his ATTORNEYS

THE NORRIS PETERS CO., PHOTO-LITHO., WASHINGTON, D. C.

UNITED STATES PATENT OFFICE.

THEODOR KUNDTZ, OF CLEVELAND, OHIO.

TABLE OR CABINET FOR SEWING-MACHINES.

SPECIFICATION forming part of Letters Patent No. 590,417, dated September 21, 1897.

Application filed June 1, 1897. Serial No. 638,956. (No model.)

To all whom it may concern:

Be it known that I, THEODOR KUNDTZ, of Cleveland, Cuyahoga county, Ohio, have invented certain new and useful Improvements in Tables or Cabinets for Sewing-Machines, &c.; and I do hereby declare the following to be a full, clear, and exact description of the invention, such as will enable others skilled in the art to which it pertains to make and use the same.

My invention relates to improvements in tables or cabinets for sewing-machines, &c.

The primary object of my invention is to provide novel and desirable mechanism for actuating the tilting leaf that bears the sewing-machine head or other machine; and the invention consists in certain features of construction and combinations of parts hereinafter described, and pointed out in the claims.

In the accompanying drawings, Figure I is a top plan of a table or cabinet embodying my invention. Portions are broken away and in section in this figure to more clearly show the construction. The load-bearing tilting leaf in this figure is shown in its horizontal or elevated position. Fig. II is an end elevation, partly in vertical section, on line II II, Fig. I. Fig. III is an end elevation, partly in vertical section, and shows the said tilting leaf in its downwardly-tilted or lowered position.

Referring to the drawings, A designates the top of the table or cabinet. Top A is provided centrally with a rectangular opening *a*, that extends through the top. A vertically-tilting leaf B is arranged to enter and occupy said opening and is horizontally hinged or pivoted at its rear end at B′ to and longitudinally of top A at the rear end of opening *a*. Member B is known as the "load-bearing leaf" and carries the sewing-machine head or other machine (not shown) of the table or cabinet.

When the machine is not in use, leaf B is tilted downwardly below top A and is again tilted upwardly or elevated into opening *a* when the machine is required for use. Said leaf B is operatively connected with the lifting-leaf C, that is horizontally hinged at one end, as at C′, to and transversely of the left-hand end of top A. The arrangement of parts is such that when said leaf C is in a horizontal position and forms a leftward extension of top A leaf B is in its elevated position, and when leaf C closes opening *a* and rests upon top A the load-bearing leaf B is in its downwardly-tilted position and the last-mentioned leaf is elevated or lowered according as the lifting-leaf C is tilted to the left or right.

The novel and meritorious mechanism employed in establishing operative connection between the load-bearing leaf B and the lifting-leaf C comprises, preferably, the following: The rear side or back A′ of the cabinet or table, at its left-hand end, is provided with a vertical or upright slideway *a′*. A slide D engages and is adapted to reciprocate endwise of said slideway. Slide D has an upwardly-projecting arm *d*, that is connected, by means of a stiff metallic link *d′*, with the rear portion of the hinged end of the lifting-leaf C—that is, one end of said link is pivoted horizontally at d^2 to arm *d* of the slide, and the link's opposite end is pivoted horizontally at d^3 to the lifting-leaf. Top A and the lifting-leaf C are suitably slotted or mortised, as at E, to accommodate the location and operation of said link and slide. A lifting-lever G, that is arranged below the left-hand end and transversely of top A, has its rear and power end operatively attached to slide D and at its forward end is fulcrumed at G′ horizontally and longitudinally of top A to a bracket or member A^2, depending from and rigid with the forward portion of said top. A roller or wheel *b* is supported from and below the left-hand end of the load-bearing leaf B and rests upon said lever, and consequently said leaf is elevated or lowered according as the lever is tilted upwardly or downwardly, and the lever is tilted downwardly or upwardly according as slide D is lowered or elevated, and said slide is elevated or lowered according as the lifting-leaf C is tilted to the left or to the right. The trend of the lifting-lever G is preferably such that its greatest lifting power is acquired after the lifting-leaf in actuating it from its closing position into its other extreme position shall have been tilted through about one-third or more of the arc in which it is moved in tilting it from its closing position into its extreme opposite position. It will therefore be observed that said lever at or near its central portion is provided with

a forwardly and upwardly extending incline *g*, that connects the rear portion with the forward portion of the lifting-surface of said lever, and of course the lever exerts its greatest power when said incline is engaged by the roller or leaf B during the elevation of said leaf.

H designates a plate that is vertically pivoted at *h* to the under side of the right-hand end of top A, as shown in dotted lines, Fig. I, and is arranged to render it capable of being actuated in under the load-bearing leaf B, so as to support the latter when said leaf is in its upwardly-tilted position.

Of course the lifting-lever should have some play endwise, and this play is readily provided for by having the lever's free end extending loosely through a hole in the slide or by having the lever's fulcrumed end provided with a longitudinally-arranged slot G^2, through which the axial pin or bearing extends.

What I claim is—

1. In a table or cabinet of the character indicated, the combination with the top A having an opening therethrough, the vertically-tilting load-carrying leaf B horizontally hinged or pivoted to said top and arranged to occupy the opening in the top in its upwardly-tilted position, and the lifting-leaf C hinged horizontally and transversely of the cabinet at the left-hand end of the top; of a slide movable up and down below the top, a slideway for said slide, operative connection between said slide and the lifting-leaf, a lifting-lever having its free end operatively engaging the slide and having its opposite end fulcrumed to a member of the table or cabinet, and a roller resting upon said lever and supported from the load-carrying leaf, substantially as and for the purpose set forth.

2. In a table or cabinet of the character indicated, the combination with the top A provided with the opening *a*, the vertically-tilting load-carrying leaf B horizontally hinged or pivoted to the top, and the lifting-leaf C hinged horizontally to and transversely of the left-hand portion of said cabinet or table; of a slide D movable up and down below the rear portion of the aforesaid top, a slideway for said slide, operative connection between said slide and the lifting-leaf, a lever G arranged below and transversely of the left-hand end of the load-carrying leaf, and having its rear end operatively engaging the slide and suitably fulcrumed at its forward end to a member of the table or cabinet, and a roller or wheel resting upon said lever and supported from the aforesaid load-carrying leaf, substantially as and for the purpose set forth.

3. In a table or cabinet of the character indicated, the combination with the top A provided with the opening *a*, the vertically-tilting load-carrying leaf B horizontally hinged or pivoted to the top, and the lifting-leaf C hinged horizontally to and transversely of the left-hand portion of said cabinet or table; of a slide D movable up and down below the rear portion of the aforesaid top, a slideway for said slide, operative connection between said slide and the lifting-leaf, a lever G arranged below and transversely of the left-hand end of the load-carrying leaf, and having its rear end operatively engaging the slide and suitably fulcrumed at its forward end to a member of the table or cabinet, a roller or wheel resting upon said lever and supported from the aforesaid load-carrying leaf, and the bearing-surface of said lever having the trend required to form the rearwardly and downwardly extending incline *g* at or near the central portion of the lever, substantially as and for the purpose set forth.

4. In a table or cabinet of the character indicated, the combination with the top A having the opening *a*, the load-carrying leaf movable downwardly below and upwardly into said opening, and the lifting-leaf C hinged at C′ to the left-hand end of the top; of the slide D having an upwardly-extending arm *d*; the vertically-arranged slideway *a*′ for said slide; the link *d*′ horizontally pivoted at one end to the aforesaid arm, and horizontally pivoted, at its opposite end, to the lifting-leaf; a suitably-supported lever suitably arranged below and extending transversely of the left-hand end of the load-carrying leaf and operatively engaging the slide, and the roller *b* arranged to rest and move upon said lever and supported from the load-carrying leaf, substantially as shown, for the purpose specified.

In testimony whereof I sign this specification, in the presence of two witnesses, this 21st day of May, 1897.

THEODOR KUNDTZ.

Witnesses:
C. H. DORER,
ELLA E. TILDEN.