Dec. 17, 1957 M. PAGE 2,816,395

TOY COOKING STOVE

Filed June 29, 1954

Fig. 1

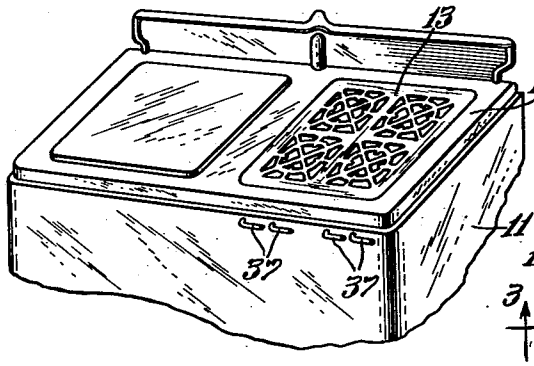

Fig. 2

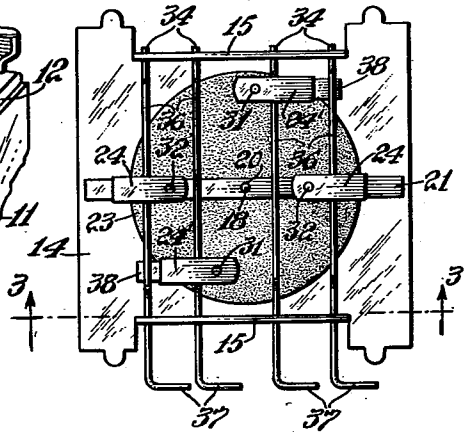

Fig. 3

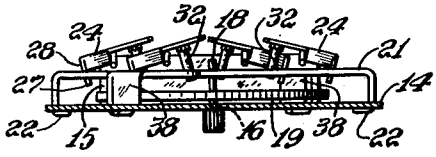

Fig. 5

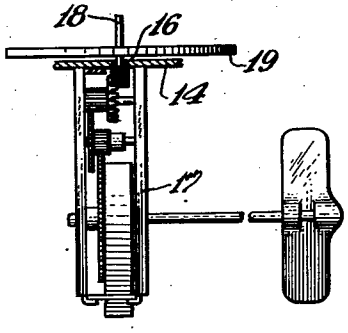

Fig. 4

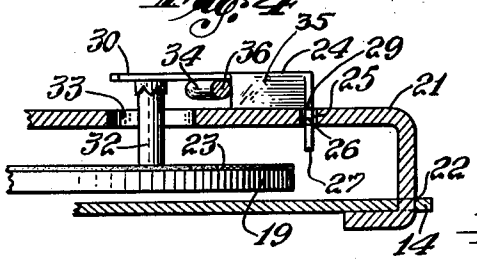

Fig. 6

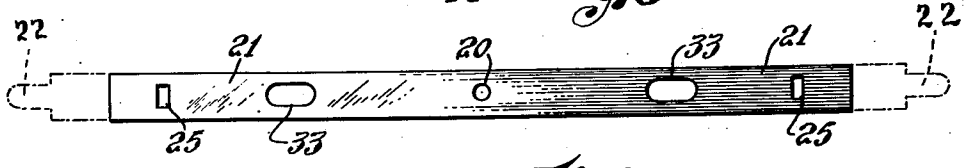

Fig. 7

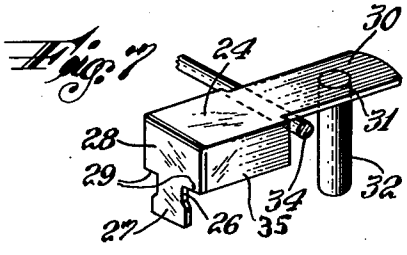

Fig. 8

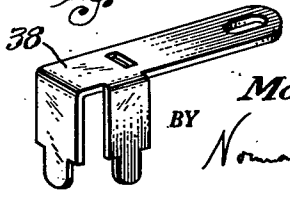

INVENTOR.
Mark Page
BY
Norman N. Popper
ATTORNEY

United States Patent Office 2,816,395 Patented Dec. 17, 1957

2,816,395

TOY COOKING STOVE

Mark Page, Great Neck, N. Y.

Application June 29, 1954, Serial No. 440,005

7 Claims. (Cl. 46—10)

My invention relates generally to toy cooking stoves and specifically to toy cooking stoves in which a simulation of combustion is visually presented.

It is among the objects of my invention to provide a toy cooking stoves in which the visual effect of combustion is presented to the eye.

A further object of my invention is to provide a visual effect of combustion which is harmless.

Yet another object of my invention is to provide a toy cooking stove which generates a stream of sparks.

Still another object of my invention is to provide a toy cooking stove in which the effect of individual burners separately controlled may be simulated.

Yet another object of my invention is to provide a toy cooking stove which is simple in form, easy to construct, relatively inexpensive, durable and provides a maximum simulation of the full scale object which it represents as a toy.

These objects and advantages as well as other objects and advantages are achieved by the device illustrated in the appended drawings, in which:

Figure 1 is a partial view in perspective of the top of my toy cooking stove;

Figure 2 is a top view of the toy cooking stove with the top plate removed;

Figure 3 is a side view of Figure 2 taken on the lines 3—3 looking in the direction of the arrows;

Figure 4 is a detailed view of a portion of the bridge support and spark producing element;

Figure 5 is a side view of the spring motor used for rotating the turntable;

Figure 6 is a top developed view of the bridge;

Figure 7 is a view of the support in perspective; and

Figure 8 is a view of the demi-bridge.

Referring now to the drawings in detail, my toy cooking stove provides a housing or casing **11** formed to represent the body of a cooking stove. The top of the casing is enclosed by a top **12** which is fastened to the casing **11**. At one side of the top **12**, there is provided a grill **13** having openings formed to simulate the cooking vessel supports existing in the conventional gas cooking stove. Beneath the top **12**, a table **14** is provided which acts as a support for the spark producing mechanism and is attached to the casing in any suitable manner. At opposite ends of the table upstanding flanges **15** are formed. In the center of the table a hole **16** is provided. Mounted immediately on and below the table **14** is the motor **17**. A driven shaft **18** extending from this motor extends through the hole **16** in the table **14**. Attached to this shaft **18** is the friction disc **19**. The top of the shaft **18** is inserted in a center hole **20** in a bridge **21**. The ends **22** of the bridge are bent downward and inwardly, inserted through holes in the table **14**, so that the bridge is secured to the table **14**. An abrasive dress **23** is applied to the disc **19**. The bridge **21** also serves to mount two supports **24**. Each end of the bridge **21** is provided with a rectangular opening **25**. The end of the supports **24** has a constricted portion **26** and an end portion **27** which

is wider than the rectangular opening **25**. The end **27** may be slightly deformed and inserted diagonally in the opening **25**; then the support **24** is straightened and turned and the spark producing stick **32** is dropped through the opening **33**.

The end **28** of the support **24** is a bent-over portion and is provided with shoulders **29** which rest on the bridge **21**. The opposite end **30** of the support **24** has an opening **31** centrally located thereon. A stick of spark producing material **32**, such as cerium, is frictionally engaged with and positioned in this opening and extends downwardly therefrom. The opening **31** is so positioned on the end **30** that the stick of spark producing material **32** will extend through a somewhat oval opening **33** formed in the bridge **21**. The support is also provided with a flange **35** or downwardly extending side portion upon which the support rests in engagement with the bridge **21** so that the normal position of the support **24** will be approximately horizontal. It is to be noted, however, that the engagement of the end **27** with the opening **25** permits of a loose up-and-down motion of the support which is almost hinge-like in character, yet does not permit the support **24** to pivot sidewise or horizontally around the bridge. The end of the stick **32** of spark producing material rests gravitationally upon the abrasive dress **23** of the disc **19** as will appear in Figure 4. When the motor **17** is wound so that the shaft **18** revolves and causes the disc **19** to rotate, the abrasive dress **23** in contact with the stick of spark producing material **32**, causes a shower of sparks to be thrown off therefrom.

Means is provided for interrupting the gravitational contact of the stick **32** with the disc **19**. This means is a plurality of rods **34**, each of which pass underneath the center of each of the corresponding supports **24**. At the point where the rods **34** pass under the support **24** there is an eccentric bent or off-set portion **36**, so that when the rod **34** is rotated, this off-set portion **36** will raise the support slightly and take the stick **32** of spark producing material out of contact with the disc **19**, thereby cutting off the spark. The manipulation of the rod **34** is affected by the handles **37** on the end of the rod. The rods **34** are supported at each end by the flanges **15** in the table **14**. There are holes in these flanges through which the rods **34** pass.

The bridge **21** supports two of the supports **24**. The remaining two supports **24'**, **24'** are supported on the demi-bridges **38** which also pass through openings in the table and are attached thereto, in the same manner that the major bridge **21** is attached.

The operation of my toy stove is as follows: With all the handles **37** disposed in the position shown in Figure 1, the eccentric portions **36** of the rods **34** have raised the supports **24** so that the spark producing sticks **32** no longer engage the friction disc **19**. This is shown in Figure 3. The motor **17** is wound whereupon the disc **19** commences to rotate. When any of the handles **37** is rotated to a downward position, the corresponding support **24** is lowered and the stick of spark producing material is allowed to come in contact with the abrasive dress **23** of the disc **19**. This position is indicated in Figure 4. The rotating contact of the abrasive dress **23** with the stick **32** causes a shower of sparks to be thrown off. These sparks when observed through the grill work **13** produces a visual effect of the combustion of household gas for cooking purposes.

The foregoing description is merely intended to illustrate an embodiment of the invention. The component parts have been shown and described. They each may have substitutes which may perform a substantially similar function; such substitutes may be known as proper substitutes for the said components and may have actually been known or invented before the present invention; these substitutes are contemplated as being within the scope of

the appended claims, although they are not specifically catalogued herein.

I claim:

1. A toy cooking stove comprising a housing, a grill on top of the housing, a table beneath the grill, a driven shaft extending through the table, a disc mounted on the shaft, a bridge attached to the table and engaging the end of the shaft, an abrasive dress on the disc, a support hingedly secured to the bridge, a stick of spark producing material frictionally engaged with the support and gravitationally bearing on the disc.

2. A toy cooking stove in accordance with claim 1 comprising corresponding flanges at opposite sides of the table, a rod rotatably mounted on the flanges, an eccentric portion on the rod engaged with the support whereby the rotation of the rod raises the support and disengages the stick from the disc.

3. A toy cooking stove comprising a housing, a table at the top of the housing, a shaft extending through the table, a means for driving the shaft, a disc mounted on the shaft above the table, an abrasive dress on the disc, a bridge attached to the table and engaging the end of the shaft, a support hingedly secured to the bridge, a stick of spark producing material frictionally engaged with the support and gravitationally bearing on the disc, flanges at opposite sides of the table, a rod rotatably supported by the flanges, an eccentric portion on the rod engaged with the support whereby the rotation of the rod raises the support and disengages the stick from the disc.

4. A toy cooking stove comprising a housing, a grill on the top of the housing, a table positioned in the housing beneath the grill, a shaft extending through the center of the table, a driving means attached to the bottom of the table and operably connected to the shaft, a disc mounted on the shaft above the table, an abrasive dress on the top of the disc, a bridge attached to the table and extending across the disc and engaging the end of the shaft, a support hingedly secured to the bridge, a stick of spark producing material frictionally engaged with the support and extending through an opening in the bridge into engagement with the abrasive dress, flanges at opposite sides of the table, a rod rotatably supported by the flanges extending outside the housing, a bent-over portion on the rod outside the housing, an eccentric portion on the rod under the support, whereby the rotation of the rod raises the support and disengages the stick from the abrasive dress.

5. A toy cooking stove comprising a housing, a grill on top of the housing, a table beneath the grill, a driven shaft extending through the table, a disc mounted on the shaft above the table, an abrasive dress on the disc, a flat strip defining a bridge disposed diametrically over the disc and engaging the top of the shaft, downturned ends of the strip engaged with the table, an L-shaped strip hingedly secured to the bridge, a stick of spark-producing material frictionally engaged with the strip and gravitationally bearing on the disc.

6. A toy cooking stove in accordance with claim 5, a flange depending from the top of the L-shaped strip, and a constricted portion adjacent to the end of said strip seated in a slot in the bridge.

7. A toy cooking stove comprising a housing, a table on top of the housing, a driven shaft extending through the table, a disc mounted on the shaft above the table, a bridge attached to the table and overlying the disc, said bridge engaging the end of the shaft, a support hingedly secured to the bridge, a stick of spark producing material frictionally engaged with the support and gravitationally bearing on the disc.

References Cited in the file of this patent

UNITED STATES PATENTS

1,619,723	Hartman	Mar. 1, 1927
2,085,566	Aronson	June 29, 1937
2,198,177	Pohlhaus	Apr. 23, 1940

FOREIGN PATENTS

66,951	Great Britain	Feb. 20, 1952