US00D347645S

United States Patent [19]

Miller

[11] Patent Number: Des. 347,645

[45] Date of Patent: ** Jun. 7, 1994

[54] MIXING APPARATUS

[75] Inventor: **William A. Miller**, Buffalo Grove, Ill.

[73] Assignee: **Fluid Management Limited Partnership**, Wheeling, Ill.

[**] Term: **14 Years**

[21] Appl. No.: **2,508**

[22] Filed: **Dec. 11, 1992**

[52] **U.S. Cl.** **D15/147**

[58] **Field of Search** 366/217, 241-251, 366/605; D15/147

[56] **References Cited**

U.S. PATENT DOCUMENTS

D. 210,320	2/1968	Collins, Jr.	D15/147
4,842,415	6/1989	Cane et al.	366/605 X

OTHER PUBLICATIONS

"Harbil Paint Mixers-Floor Model: GQF; Counter Top; GQB", 1 page, 2-sided Brochure, Harbil Manufacturing ®, A Division of Fluid Management Limited Partnership, Wheeling, IL, Printed in USA/(1991).

Primary Examiner—Alan P. Douglas
Assistant Examiner—Antoine D. Davis
Attorney, Agent, or Firm—Fitch, Even, Tabin & Flannery

[57] **CLAIM**

The ornamental design for a mixing apparatus, as shown and described.

DESCRIPTION

FIG. **1** is a perspective view illustrating an embodiment of a mixing apparatus according to our new design;
FIG. **2** is a top plan view thereof;
FIG. **3** is a front elevational view thereof;
FIG. **4** is a side elevational view from the right thereof;
FIG. **5** is a side elevational view from the left thereof;
FIG. **6** is a back view thereof; and,
FIG. **7** is a bottom plan view thereof.

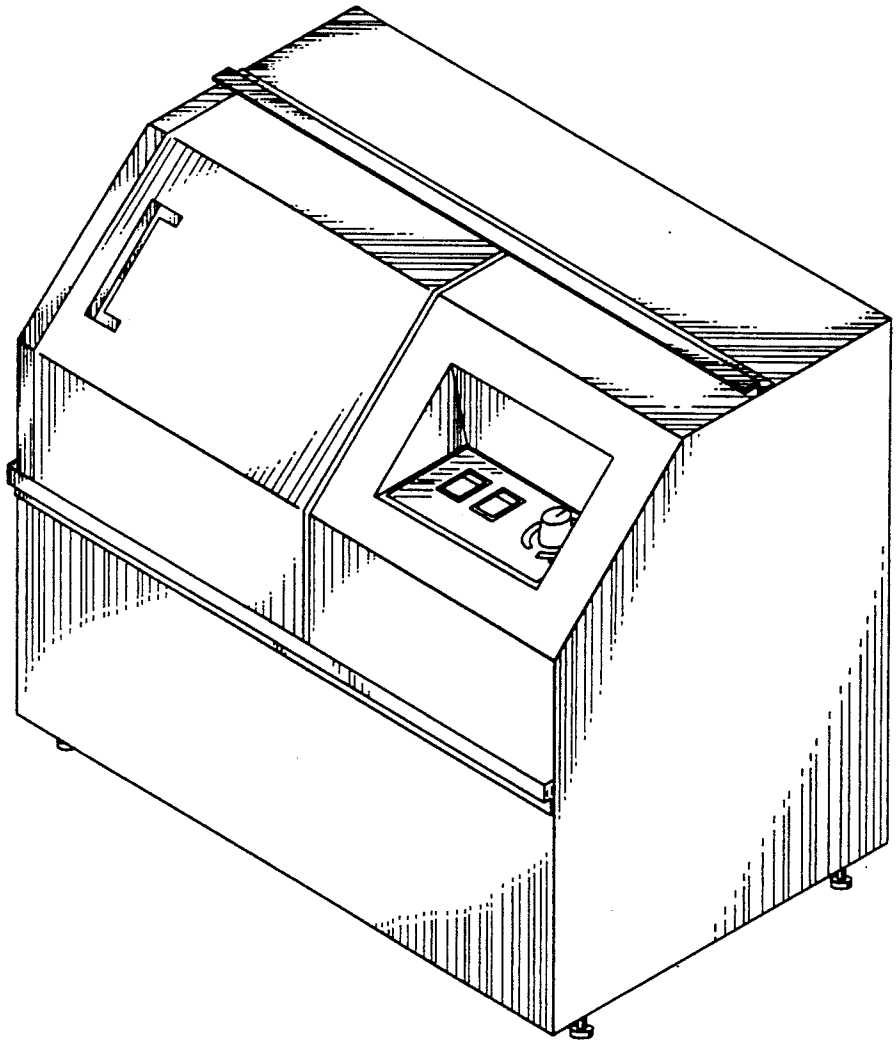

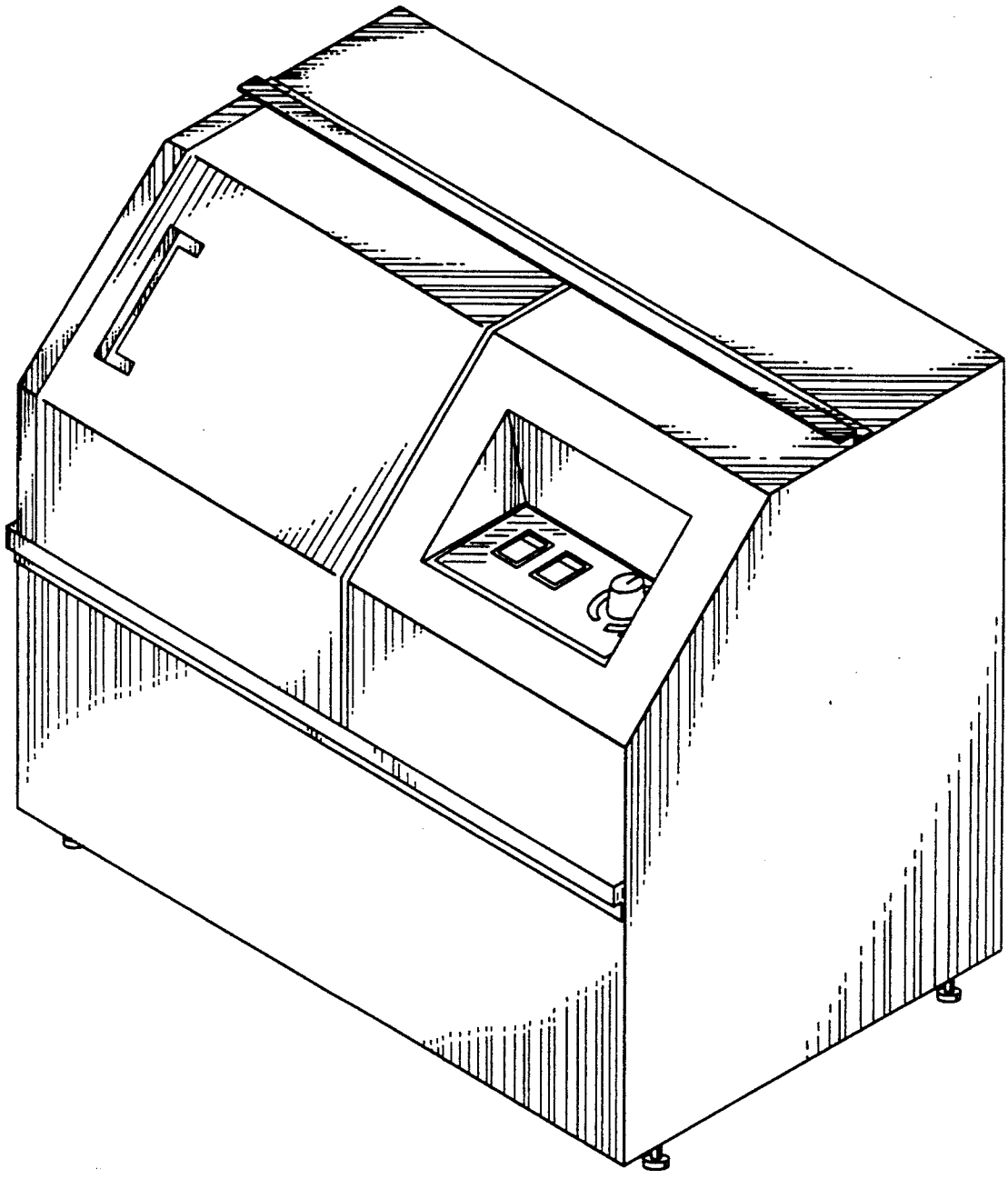

Fig. 1

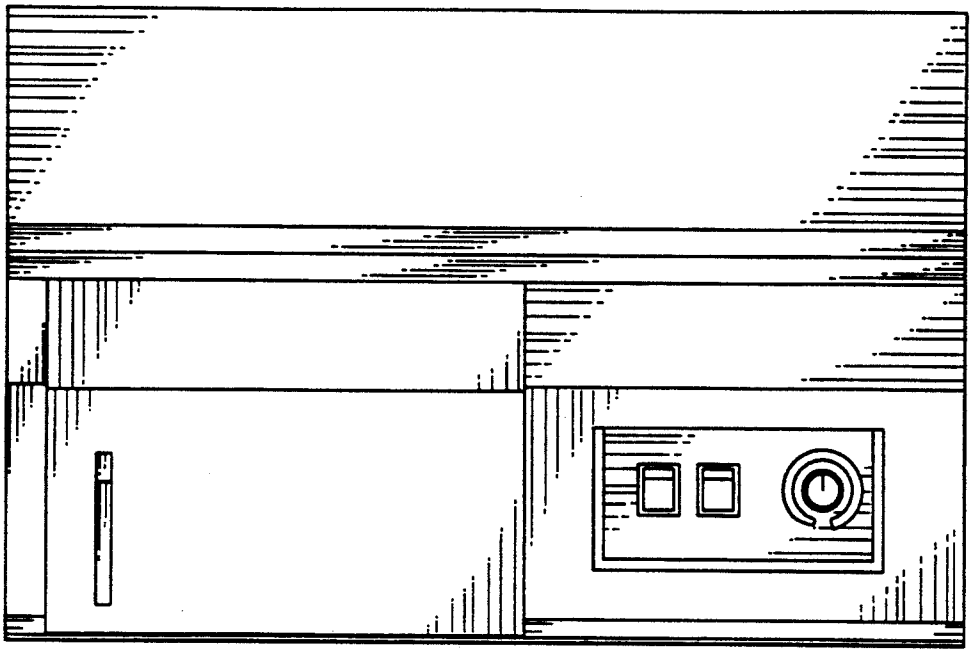

Fig. 2

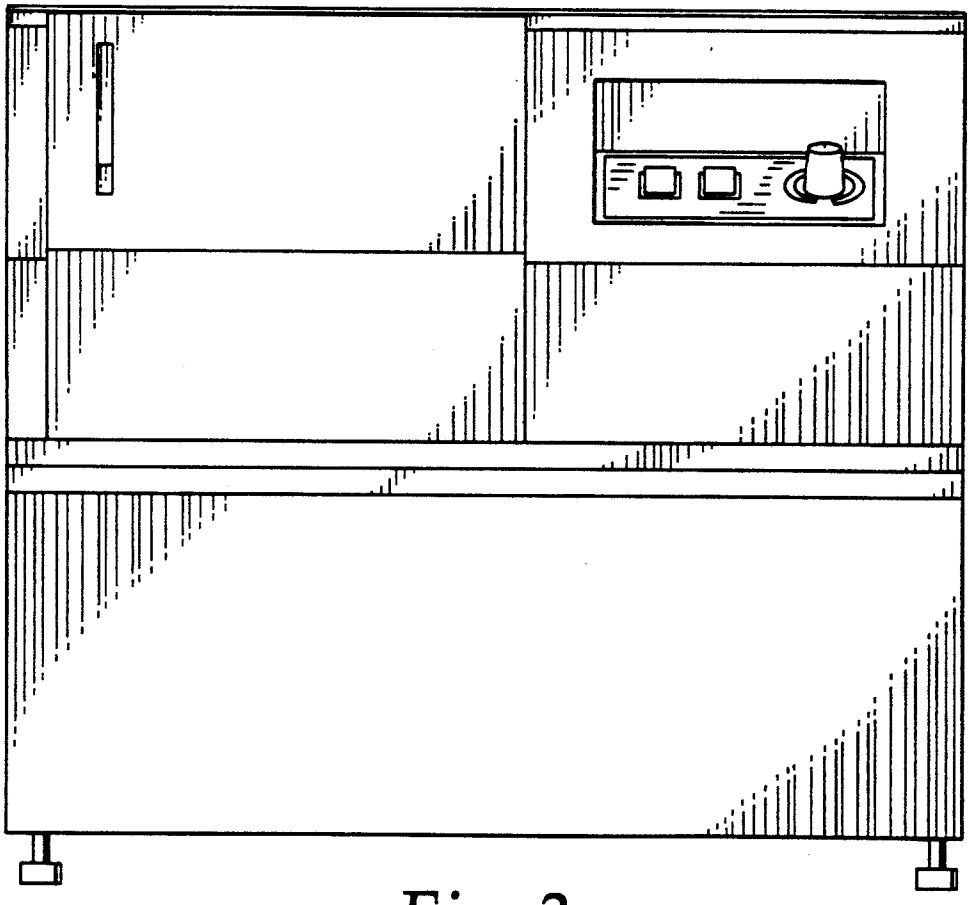

Fig. 3

Fig. 4

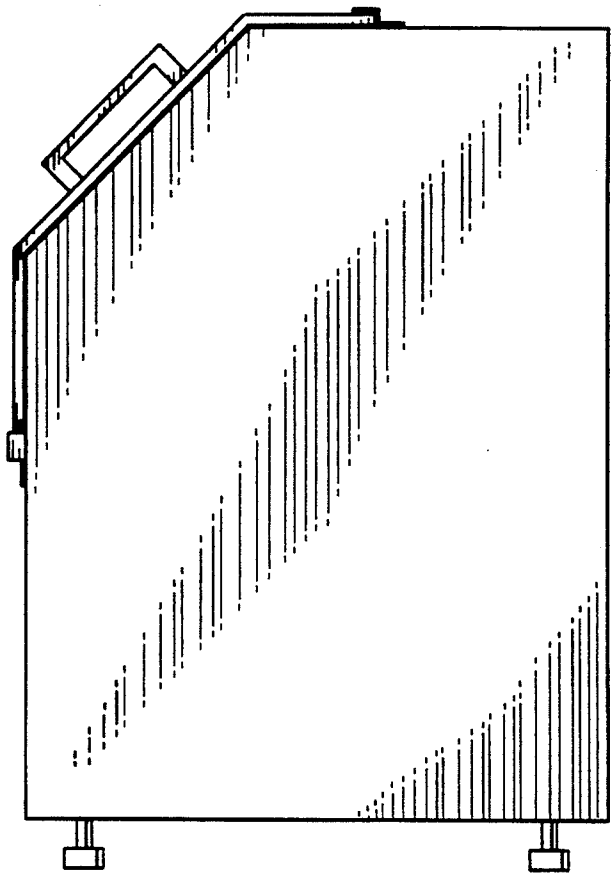

Fig. 5

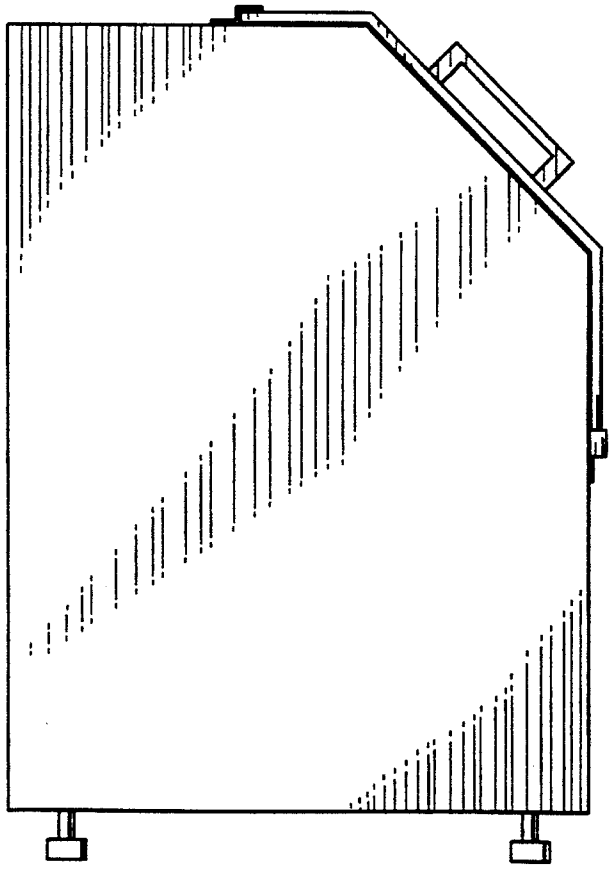

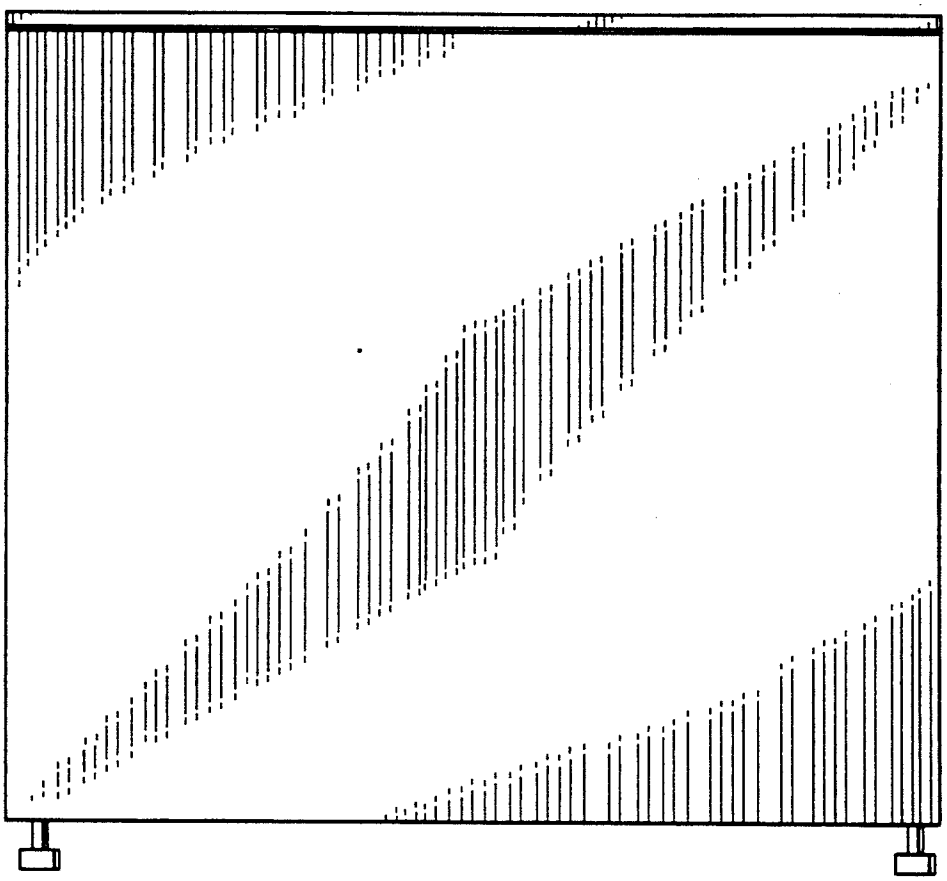

Fig. 6

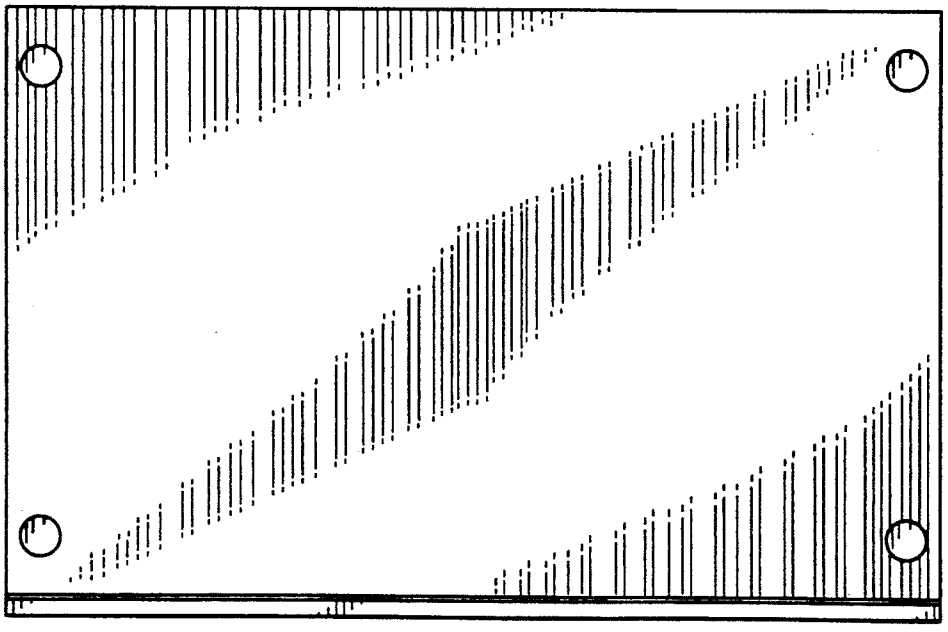

Fig. 7