Office de la Propriété Intellectuelle du Canada
Un organisme d'Industrie Canada

Canadian Intellectual Property Office
An agency of Industry Canada

CA 2416970 C 2010/08/03

(11)(21) **2 416 970**

(12) **BREVET CANADIEN**
CANADIAN PATENT

(13) **C**

(22) **Date de dépôt/Filing Date:** 2003/01/22

(41) **Mise à la disp. pub./Open to Public Insp.:** 2003/09/22

(45) **Date de délivrance/Issue Date:** 2010/08/03

(30) **Priorités/Priorities:** 2002/03/22 (US60/366,914); 2002/07/31 (US10/209,126)

(51) **Cl.Int./Int.Cl.** *F28F 9/013* (2006.01)

(72) **Inventeurs/Inventors:**
CALANOG, MARCIANO M., US;
WANNI, AMAR S., US

(73) **Propriétaire/Owner:**
EXXONMOBIL RESEARCH AND ENGINEERING COMPANY, US

(74) **Agent:** BORDEN LADNER GERVAIS LLP

(54) **Titre :** SUPPORTS DE TUBE D'ECHANGEUR DE CHALEUR A CIRCULATION DIRECTE
(54) **Title:** HEAT EXCHANGER FLOW THROUGH TUBE SUPPORTS

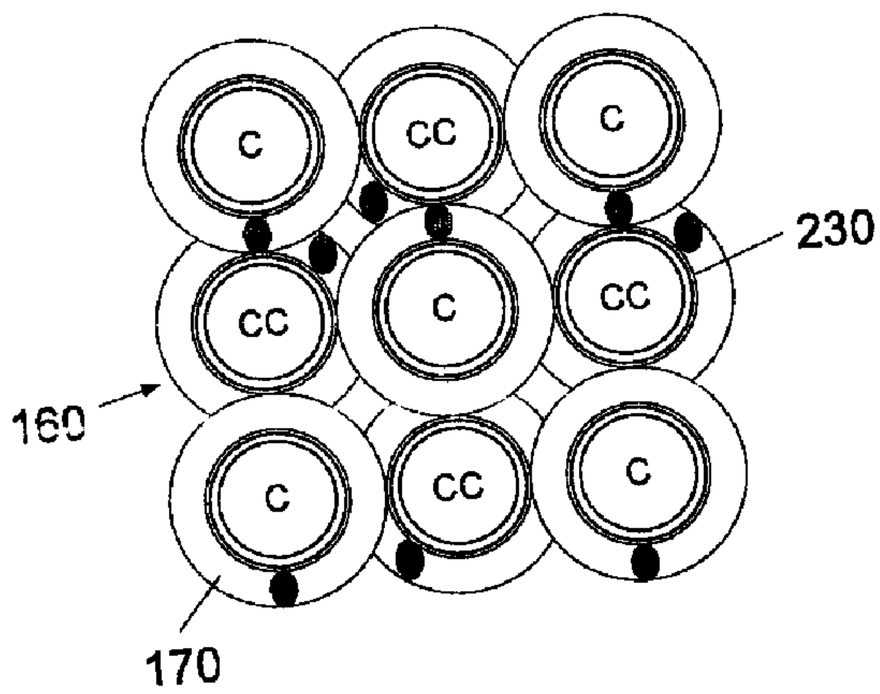

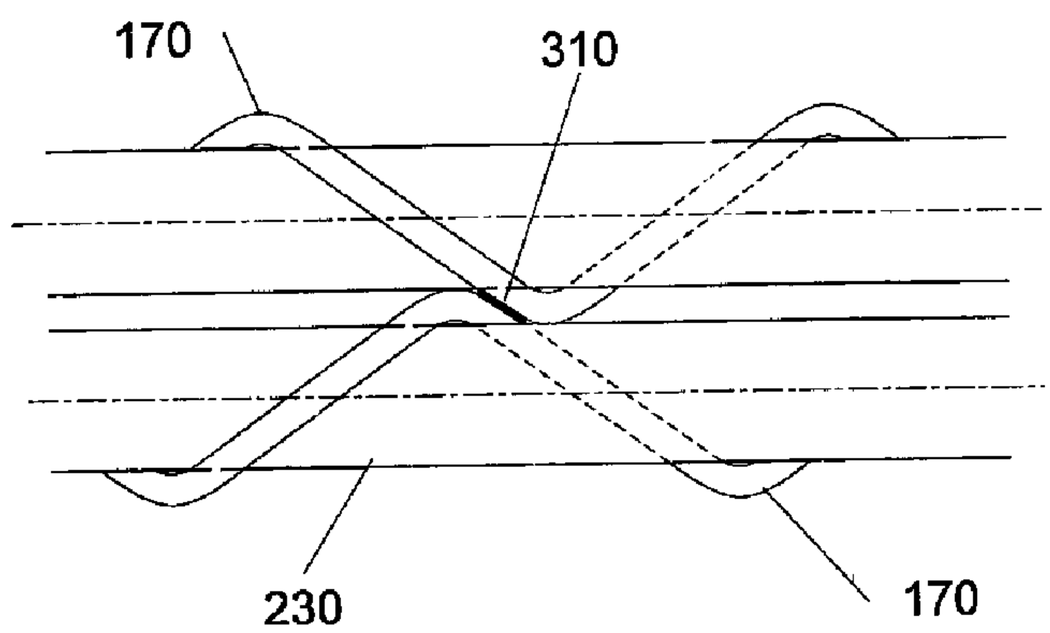

(57) **Abrégé/Abstract:**
A tube support system for a heat exchanger that serves to replace the baffles present in typical shell-and-tube heat exchangers. A shell-and-tube heat exchanger employs helically coiled wires to form a support structure for the tubes contained within the heat

(57) Abrégé(suite)/Abstract(continued):
exchanger shell. The elimination of baffles and the use of the coil support structure according to the present invention permits axial fluid flow for the shell side fluid and significantly minimizes fouling problems and tube damage resulting from flow-induced tube vibration.

ABSTRACT OF THE DISCLOSURE

A tube support system for a heat exchanger that serves to replace the baffles present in typical shell-and-tube heat exchangers. A shell-and-tube heat exchanger employs helically coiled wires to form a support structure for the tubes contained within the heat exchanger shell. The elimination of baffles and the use of the coil support structure according to the present invention permits axial fluid flow for the shell side fluid and significantly minimizes fouling problems and tube damage resulting from flow-induced tube vibration.

HEAT EXCHANGER FLOW THROUGH TUBE SUPPORTS

FIELD OF THE INVENTION

[0001] The present invention relates generally to heat exchangers and more particularly to support structures for heat exchanger tubes within heat exchanger devices.

BACKGROUND OF THE INVENTION

[0002] Heat exchangers were developed many decades ago and they continue to be extremely useful in many applications requiring heat transfer. While many improvements to the basic design have been made, there still exist tradeoffs and design problems associated with the inclusion of heat exchangers within commercial processes.

[0003] One of the problems associated with the use of heat exchangers is the tendency toward fouling. Fouling refers to the formation of various deposits and coatings on the surfaces of heat exchangers as a result of process fluid flow and heat transfer. There are various types of fouling including corrosion, mineral deposits, polymerization, crystallization, coking, sedimentation and biological. In the case of corrosion, the surfaces of the heat exchanger can become corroded as a result of the interaction between the process fluids and the materials used in the construction of the heat exchanger. The situation is made even worse due to the fact that various fouling types can interact with each other to cause even more fouling. Fouling can and does result in additional resistance with respect to the heat transfer and thus decreased performance with respect to heat transfer. Fouling also causes an increased pressure drop in connection with the fluid flowing on the inside of the exchanger.

[0004] Many heat exchangers in use today contain baffles. Baffles are interposed in the fluid path in order to ensure that the fluid flowing on the outside the tubes flows across the tubes. Unfortunately, however, baffles serve to increase the fouling problem because they create dead zones on the shell side of the exchanger.

[0005] One type of heat exchanger which is commonly used in commercial equipment is the shell-and-tube exchanger in which one fluid flows on the inside of the tubes, while the other fluid is forced through the shell and over the outside of the tubes. Typically, baffles are placed to support the tubes and to force the fluid across the tube bundle in a serpentine fashion.

[0006] Fouling can be decreased through the use of higher fluid velocities. In fact, one study has shown that a reduction in fouling in excess of 50% can result from a doubling of fluid velocity. While the use of higher fluid velocities can substantially decrease or even eliminate the fouling problem, higher fluid velocities are unfortunately, generally unattainable on the shell side of conventional shell-and-tube heat exchangers because of excessive pressure drops which are created within the system by the baffles.

[0007] Another problem that often arises in connection with the use of heat exchangers is tube vibration damage. Tube vibration is most intense and damage is most likely to occur in cross flow implementations where fluids flow is perpendicular to the tubes, although tube vibration damage can also occur in non-crossflow (i.e. axial) implementations in the case of very high fluid velocities.

[0008] Existing shell-and-tube heat exchangers suffer from the fact that they must typically use baffles to maintain the required heat transfer. This, however, results in "dead zones" within the heat exchanger where flow is minimal or even non-existent. These dead zones generally lead to excessive fouling. Other types of heat exchangers may or may not employ baffles. If they do, the same increased fouling problem exists. Further, in heat exchangers fitted with baffles, for example, the cross flow implementation results in the additional problem of potential damage to tubes as a result of flow-induced vibration. In the case of such damage, processes must often be interrupted or shut down in order to perform costly and time-consuming repairs to the device.

SUMMARY OF THE INVENTION

[0009] According to the present invention a heat exchanger includes a tube support system that serves to replace the baffles present in typical shell-and-tube type exchangers. The shell-and-tube heat exchanger of the present invention employs helically coiled wires to form a support structure for the tubes contained within the heat exchanger shell. The wire coil may have a diameter substantially equal to the space between the heat exchanger tubes or, in another embodiment, a diameter equal to one-half of the space between the tubes.

[0010] In a preferred embodiment, the coils in the support structure alternate between a clockwise and a counterclockwise rotation within the support structure. The coils forming the support structure may overlap with one another while in an alternative embodiment, the coils make point contact with another.

[0011] High velocity axial flow is used in order to eliminate dead zones and related fouling problems. Other advantages including a significant reduction of flow-induced tube vibration that can lead to tube damage, thermal expansion problems and dead zones that promote rapid fouling may be attained. Axial flow may be provided on the shell side to eliminate the dead zones which cause fouling and which are characteristic of known types of heat exchanger.

[0012] The present heat exchanger design permits operation at high fluid velocities on the shell side of the exchanger to reduce fouling substantially. Velocities are essentially only limited by erosion limits and pump size. The use of the present tube support system of the present invention also makes it easier to predict the performance of the heat exchanger as the flow geometry is simple and has no bypass or leakage streams. As a result, simpler calculations may be used in order to design exchangers. In addition, baffles are not required to obtain the necessary heat transfer characteristics.

BRIEF DESCRIPTION OF THE DRAWINGS

[0013] Figure 1 is a side elevation view of a single-pass heat exchanger according to the invention;

[0014] Figure 2 is a cross-sectional view of a heat exchanger in which the coil wire thickness is substantially equal to the inter-tube spacing and the tubes are placed in an in-line pitch;

[0015] Figure 3 is a close up view of tubes and the coil structure in Figure 2.

[0016] Figure 4 is a cross-sectional view of the heat exchanger in which the coil wire thickness is substantially equal to one-half of the inter-tube spacing;

[0017] Figure 5 is a cross-sectional view of the weld between two coils within the support structure framework in which the coil wire thickness is equal to an amount greater than one-half the inter-tube spacing and up to a full inter-tube spacing with the coils overlapping one another; and

[0018] Figure 6 is a cross-sectional view of the heat exchanger in which coil wire thickness is equal to the inter-tube spacing and the tubes are placed in a triangular pitch.

DETAILED DESCRIPTION

[0019] In Figure 1 the shell portion of a preferred form of the heat exchanger is broken away to illustrate more clearly the tube bundle construction. While Figure 1 shows a shell-and-tube exchanger in the form of a single-pass embodiment, the invention is equally applicable to many other forms of shell-and-tube exchangers such as, for example, two or more tube passes, U-shaped tubes, removable

tube bundle designs, and exchangers known as multi-tube double pipes. The heat exchanger 100 of Figure 1 includes a shell 150 and a tube bundle 160 in the shell.

[0020] Tube bundle 160 includes a pair of tubesheets 180 and 190 located respectively at each end of the tube bundle 160. The tubes contained in tube bundle 160 are fastened to apertures contained within tubesheets 180 and 190 by means known in the art such as by welding and/or by expanding the tubes into tubesheets 180 and 190. Tube side inlet 140 and corresponding tube side outlet 130 provide a means for introducing a first fluid into the tubes in tube bundle 160, and for expelling the first fluid from exchanger 100, respectively. Shell side inlet 110 and shell side outlet 120 provide a means for a second fluid to enter and exit the shell side of heat exchanger 100, respectively, and thus pass over the outside of the tubes in tube bundle 160.

[0021] The coils 170 of the present invention are shown in Figure 1. These coils 170 contain tubes within their internal periphery and also serve to provide a support structure to allow tubes to be inserted between the outside peripheries of the coils 170. Coils 170 may extend fully from tubesheet 180 all the way to tubesheet 190, or alternatively, one or more coil structures may be intermittently spaced along the tubes. For example, a coil structure may begin about 30 cm (12 in.) from tubesheet 180 and then extend approximately 20 cm (8 in.). This could be followed by a gap of approximately 60 cm (24 in.) followed by another length of coil structure and so on. However, it is possible for the coil structure to extend the full length of the tubes without gaps. The support structures of the present invention may be preferably welded to tie rods or, in the alternative or in addition, to several tubes at the outer periphery of tube bundle 160 in order to prevent the support structure from moving.

[0022] An axial flow configuration is preferably used for the shell side fluid. In addition it is also preferable that a countercurrent flow arrangement be employed as between the two different fluids although a non-countercurrent (i.e. cocurrent) flow or a combination of cocurrent and countercurrent flow may also be implemented.

[0023] Figure 2 shows the support structure employed to support the tubes in tube bundle 160. In a first embodiment as illustrated in Figure 2, coiled wires which have a diameter that is substantially equal to the space between the tubes comprising tube bundle 160 are used. The wire material is preferably comprised of erosion-resistant material such as stainless steel, titanium or other materials with similar metallurgical characteristics. The term "wire" encompasses various wire cross-sections such as circular, square, elliptical, rectangular, or other suitable geometric shapes so that the wire may be a wire, rod, strip or bar, all of which may be implemented in constructing the coiled support structure. Figure 2 is an example of the use of an elliptical cross-section for coils 170. In Figure 2, in the finished product, the wire material is wrapped around the tubes 230 to form coils that overlap with one another with the tubes are aligned with one another in horizontal rows and also in vertical rows thus comprising the known in-line arrangement for tubes. Other tube positioning arrangements are also possible.

[0024] The coil structure is preferably constructed as follows. Coils 170 are pre-fabricated according to the specified diameter, tube pitch and coil pitch requirements. Coil pitch represents the axial distance along the tube length associated with one complete 360° turn around the tube. In a preferred embodiment the coil makes at least two complete turns around the length of the tube. Such prefabricated coils are generally available from coil manufacturers. Individual coils 170 are placed in a jig and adjacent coils are preferably fused together by welding. For example electrical arc welding may be used. In the fabrication process, the coil outer diameter must not exceed the tube pitch plus one intertube space and in addition, the inside diameter of the coils 170 must have sufficient clearance to allow for insertion of tubes 170.

[0025] A series of coils 170 are connected together by welding to form the support structure. As shown in Figure 2, the coil wire thickness is substantially equal to the space that would otherwise exist between the tubes 230. This results in an overlapping arrangement as between the coils forming the framework of the support structure. It is preferable in this embodiment for various portions of the support

structure to alternate as between counterclockwise and clockwise wrappings (illustrated in Figure 2 as "CC" and "C" respectively). For example, in Figure 2, the coil at the top left corner has a clockwise wrap while all coils in contact with that coil have a counterclockwise wrap.

[0026] As can be seen in Figure 2, it is preferred that in the in-line embodiment, all tubes are contained within the interior surface of a coil 170. In other words, no tubes are located between the outer peripheries of two or more coils 170. The outer edge of tube bundle 160 will preferably be fitted with sealing strips, rings or bands which are fastened to tube bundle 160 and extend toward the inner surface of shell 150 in order to avoid flow bypassing.

[0027] Tubes 230 are interposed into the interior of coils 170 but are not physically attached (e.g. by welding) to each other. This provides the advantage that it is easier to fabricate the exchanger as well as service the exchanger by replacing damaged tubes.

[0028] Figure 3 is a close up side view of the tube support structure including the tubes 230 and the coils 170. Coils 170 extend in the inter-tube space and coils 170 themselves overlap with one another when viewed from the axial direction as in Figure 2. However, when viewed from the front as in Figure 3, the coils 170 do not overlap with one another but instead make contact with one another via weld 310. In Figure 3, the top coil 170 is wound in a clockwise fashion when viewed from the right while the bottom coil 170 is wound in a counterclockwise fashion when viewed from the right.

[0029] Figure 4 shows another embodiment: an axial view of the heat exchanger 100 is illustrated. In this embodiment, the thickness of coils 410 is substantially equal to one-half of the inter-tube spacing size. As a result, in this configuration, rather than overlapping with one another, coils make point contact with one another, for example at point 430. It is preferable in this embodiment, as it is in the

first embodiment, for the wrapping of coils to alternate as between clockwise and counterclockwise for adjacent coils.

[0030] The two embodiments provided, namely using coil thicknesses of approximately 100% of the inter-tube spacing and approximately 50% of the inter-tube spacing are not the exclusive possibilities. In fact, any coil thickness which is at least 50% but no more than approximately 100% of the inter-tube spacing amount may normally be used.

[0031] Figure 5 illustrates the trimming or thinning requirements which may be undertaken in any embodiment in which the coil thickness is equal to any amount greater than one-half of the inter-tube spacing amount (i.e. any embodiment other than the above-described second embodiment). In such cases, it is possible to trim the thickness of coil wire 510 so that it may make planar contact with its neighboring coil wire, for example in Figure 5, coil wire 520. By employing trimming, and thus providing planar contact between coil wires 510 and 520, it is possible to create a larger contact area and thus provide a stronger weld. According to the teachings of the present invention, coil wires should be trimmed down to approximately one-half of the inter-tube space. For example, if the coil thickness of coil wires 510 and 520 were 70% of the inter-tube space, each of coil wires 510 and 520 should be trimmed down to approximately 50% of the inter-tube space at the contact point at weld 530.

[0032] Figure 6 is an end view of a third embodiment in which the tubes 610 are arranged in triangular pitch. In this case, some tubes 610 will be contained within the interior of coils 620 and others will not. The tubes 610 that are not contained within the interior of individual coils 620 are nonetheless supported by the exterior of the coils 620 around the adjacently disposed tube 610. Again, in this embodiment, it is preferable that coils which are adjacent to one another be wound in opposite directions (i.e. clockwise adjacent to counterclockwise).

[0033] In Figure 6, the coil thickness is equal to the inter-tube spacing which results in an overlap as between the adjacent coils when viewed from the end as

in the Figure 6 view. Alternatively, but not shown, coil thickness in the triangular pitch case can be anywhere from 50% of inter-tube spacing to 100% of inter-tube spacing. As discussed above, in the case of 50% of inter-tube spacing, the coils will make point contact and not overlap with one another.

[0034] The tubes on the left half of Figure 6 represent the same tubes as is shown on the right half of Figure 6. Thus, for example, the tube 610 at the upper left hand corner of the left side coil structure and tubes is the same tube as is shown in the upper left hand corner of the right side coil structure and tubes illustrated in Figure 6. In a preferred embodiment of this invention, rather than extending from one tubesheet all the way to the other tubesheet, multiple sections of coil structures are interspersed along the length of the tubes 610 with gaps between such coil structures. However, it is possible for the coil structure to extend the full length of the tubes without gaps. In this case, it is preferable that the coil structure be produced such that individual segments with alternating designs are placed end to end to form a coil structure extending the full length of the tubes.

[0035] It is preferable that each successive coil structure along the tube alternate with respect to which tubes are contained within the interior of the coils and which tubes are not. Thus, for example, the tube at the upper left corner illustrated in the left side of Figure 6 is contained within a coil 610 at one point along the length of the tube while further down the tube, at the next successive coil structure segment (as shown on the right side of Figure 6), that same tube is supported by the exterior surfaces of the adjacent coils. It is preferable to form each coil structure so that successive coil structures alternate with respect to which tubes are enclosed internally and which are not as described above.

[0036] A strainer of some form should normally be used at some point in the process line prior to reaching the heat exchanger. This is important in order to avoid any debris becoming trapped within the heat exchanger of the present invention either in a tube or on the shell side of the heat exchanger. If debris of a large enough size or of a large enough amount were to enter the heat exchanger of the present

invention (or, in fact, any currently existing heat exchanger) fluid velocities can be reduced to the point of rendering the heat exchanger ineffective.

CLAIMS:

1. A heat exchanger comprising:

(a) a plurality of tubes having opposite ends and being spaced apart according to a predetermined inter-tube spacing, with each end in contact with a tubesheet;

(b) a tube support structure comprising a plurality of wire support coils, the support coils comprising helically wound material in which at least a portion of the length of each of the tubes is contained within the interior circumference of a support coil,

wherein the diameter of the wire forming each said support coil is essentially equal to the predetermined inter-tube spacing between the tubes, and

wherein each coil is wound in either a clockwise or counterclockwise orientation with coils containing adjacent tubes being wrapped in an orientation that is different from the adjacent coil and adjacent support coils in contact with one another at select locations being welded together.

2. The heat exchanger of claim 1 in which each coil is wound in either a clockwise or counterclockwise orientation and each coil overlaps only with other coils that are wrapped in a different orientation.

3. The heat exchanger of claim 1, wherein each coil is essentially the same longitudinal length as each of the tubes.

4. The heat exchanger of claim 1, wherein the each coil comprises a plurality of partial coils extending along a portion of each of the tubes with the partial coils intermittently positioned along the length of the tube with gaps present between the partial coils.

5. The heat exchanger of claim 1, wherein the helically wound support coils support a first set of the tubes contained within the interior circumferences of the support coils and a second set of the tubes supported by a surface formed by the exterior circumference of the support coils.

6. The heat exchanger of claim 5, wherein each coil is essentially the same longitudinal length as each of the tubes.

7. The heat exchanger of claim 5, wherein the each coil is comprised of a plurality of partial coils extending along a portion of each tube and the partial coils are intermittently positioned along the length of the tube with gaps present between the partial coils.

8. The heat exchanger of claim 7, wherein the winding of each partial coil along each of the tubes is the opposite of the winding of the partial coil positioned along the longitudinal length of each adjacently disposed tube.

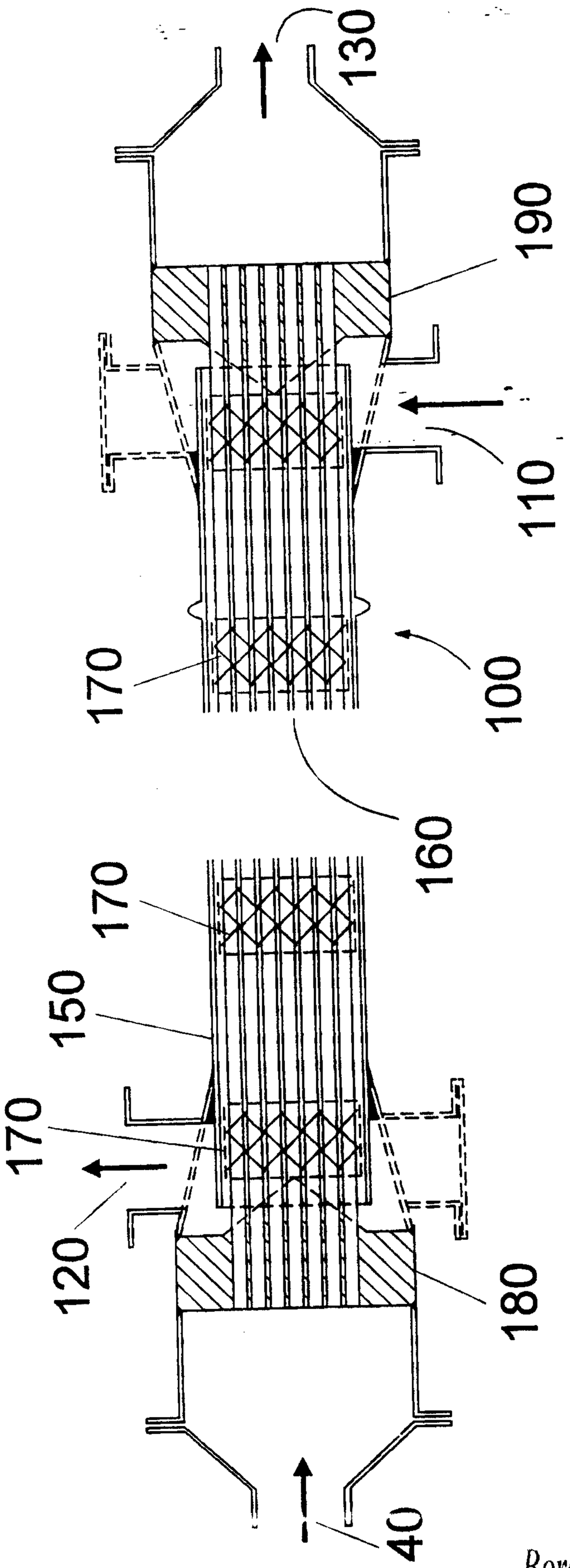

Fig. 1

Borden Ladner Gervais LLP / s.r.l.

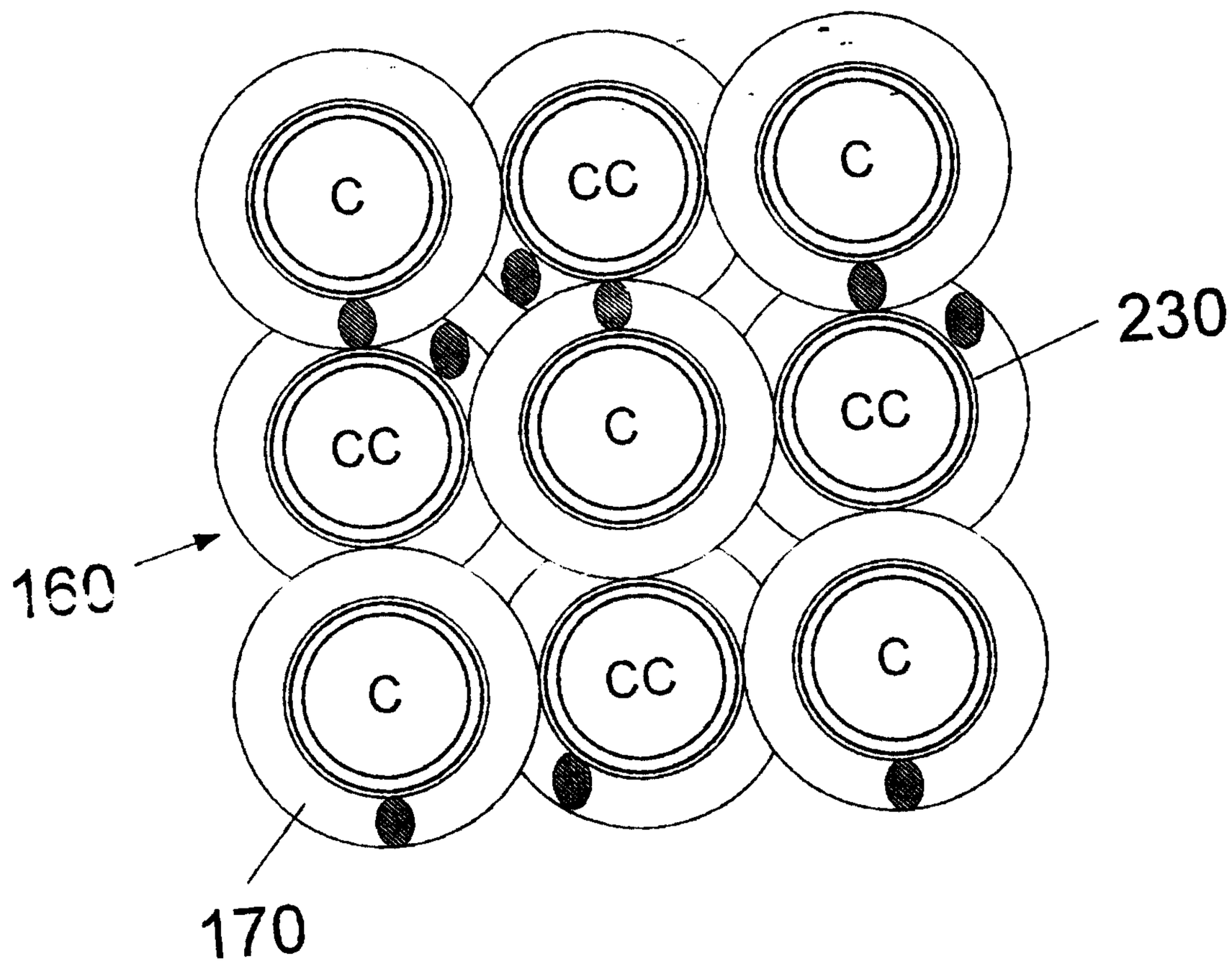

Fig. 2

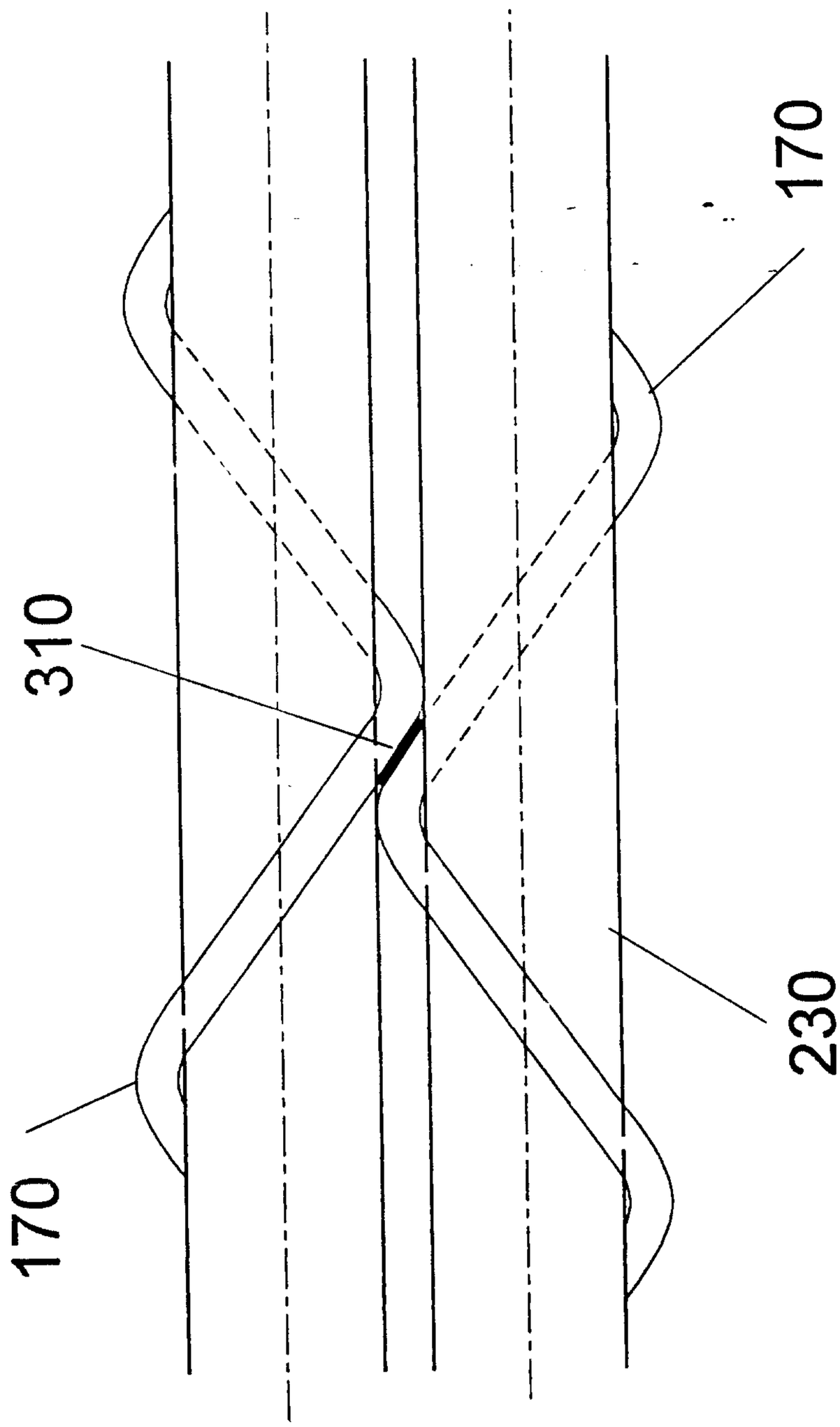

Fig. 3

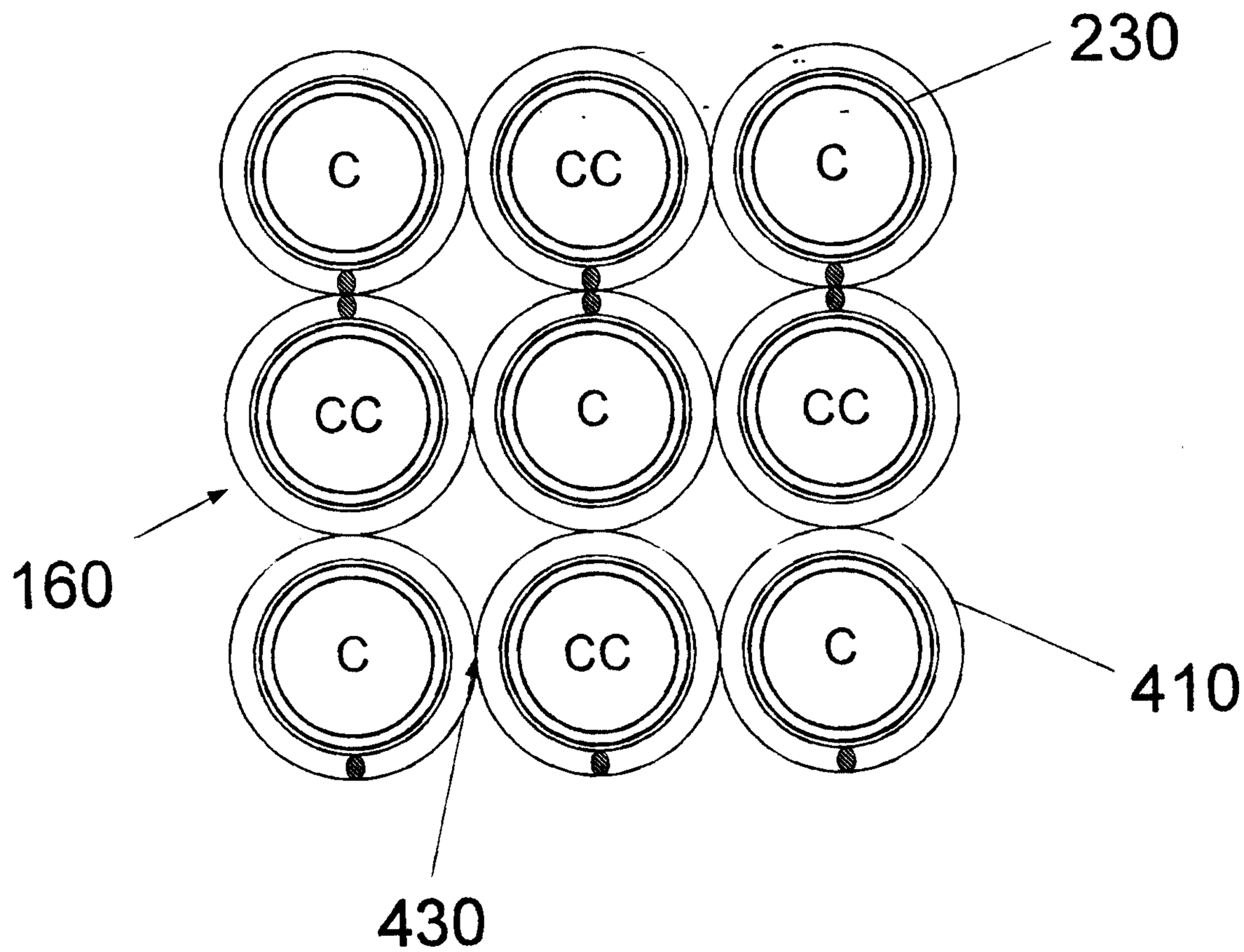

Fig. 4

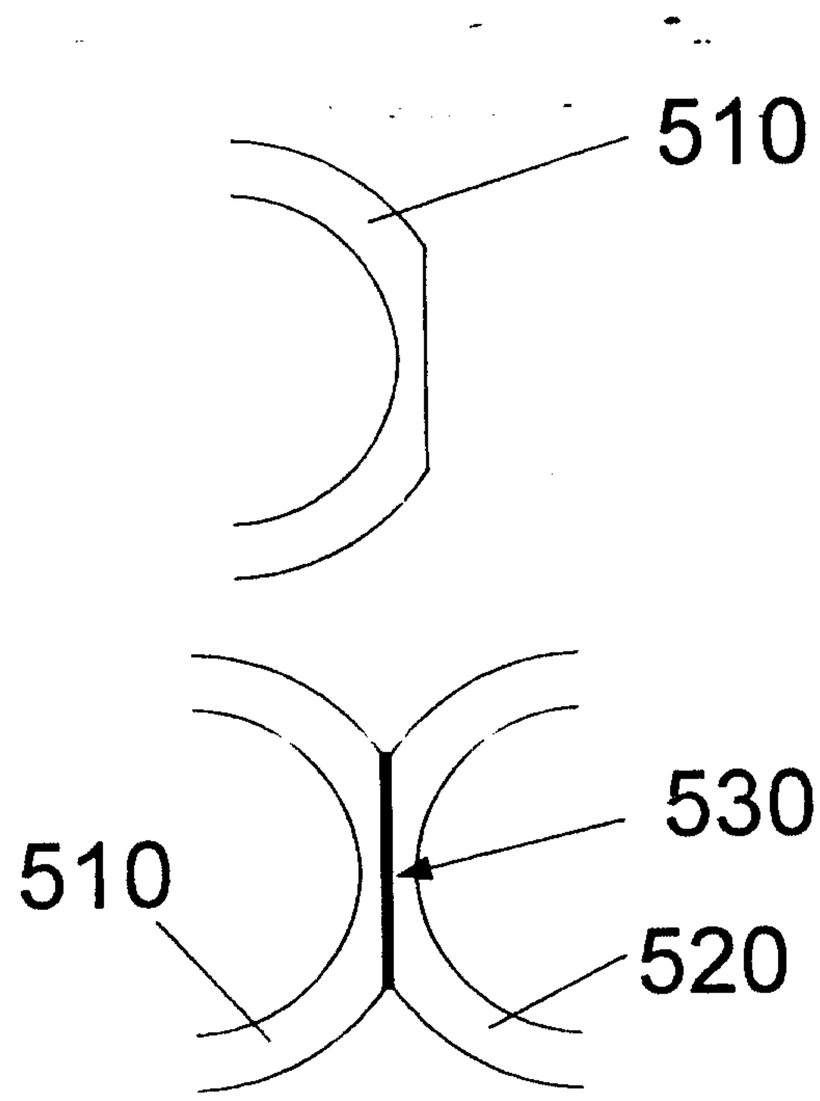

Fig. 5

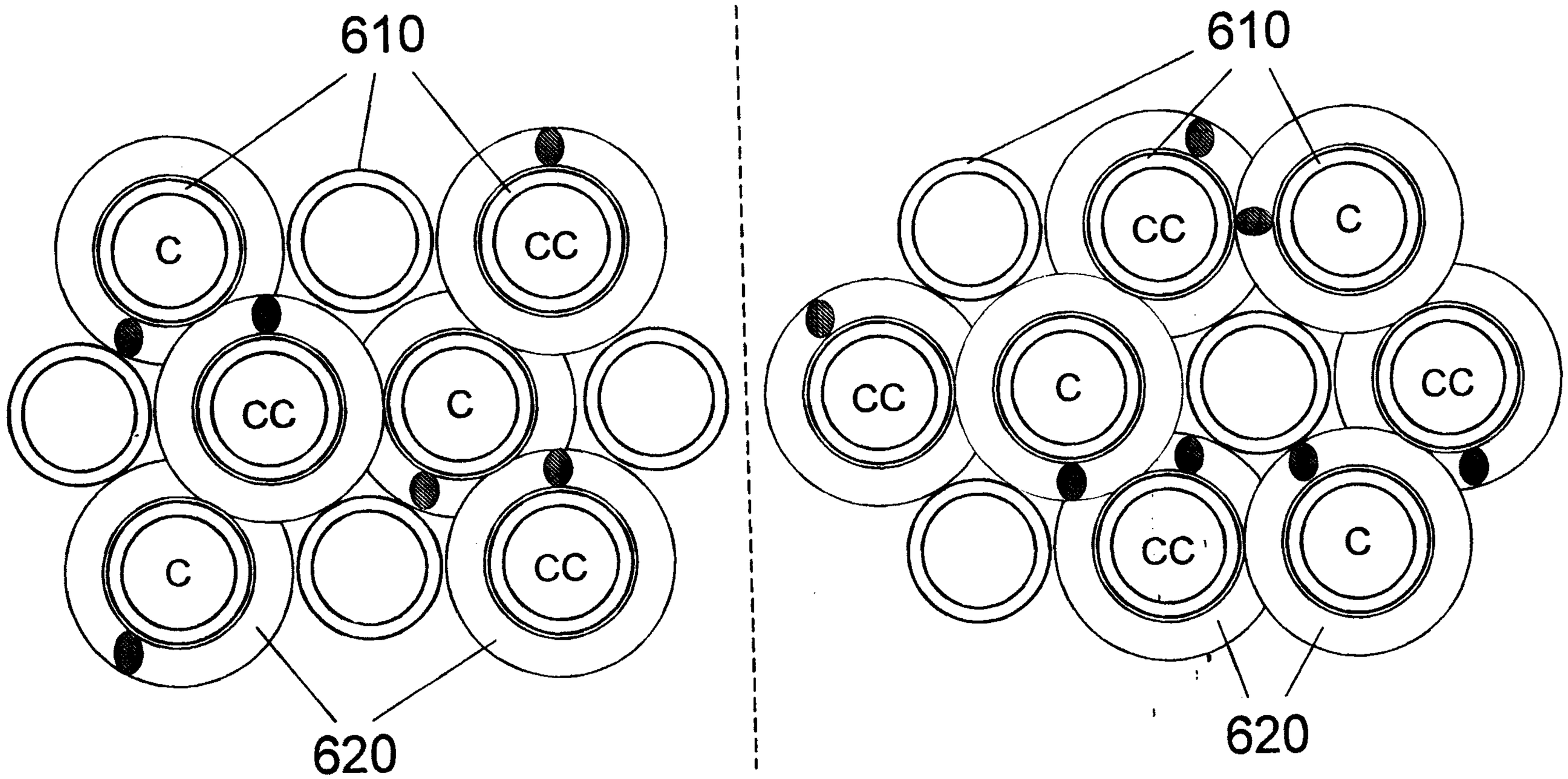

Fig. 6

CA 02416970 2003-01-22

Borden Ladner Gervais LLP / s.r.l.

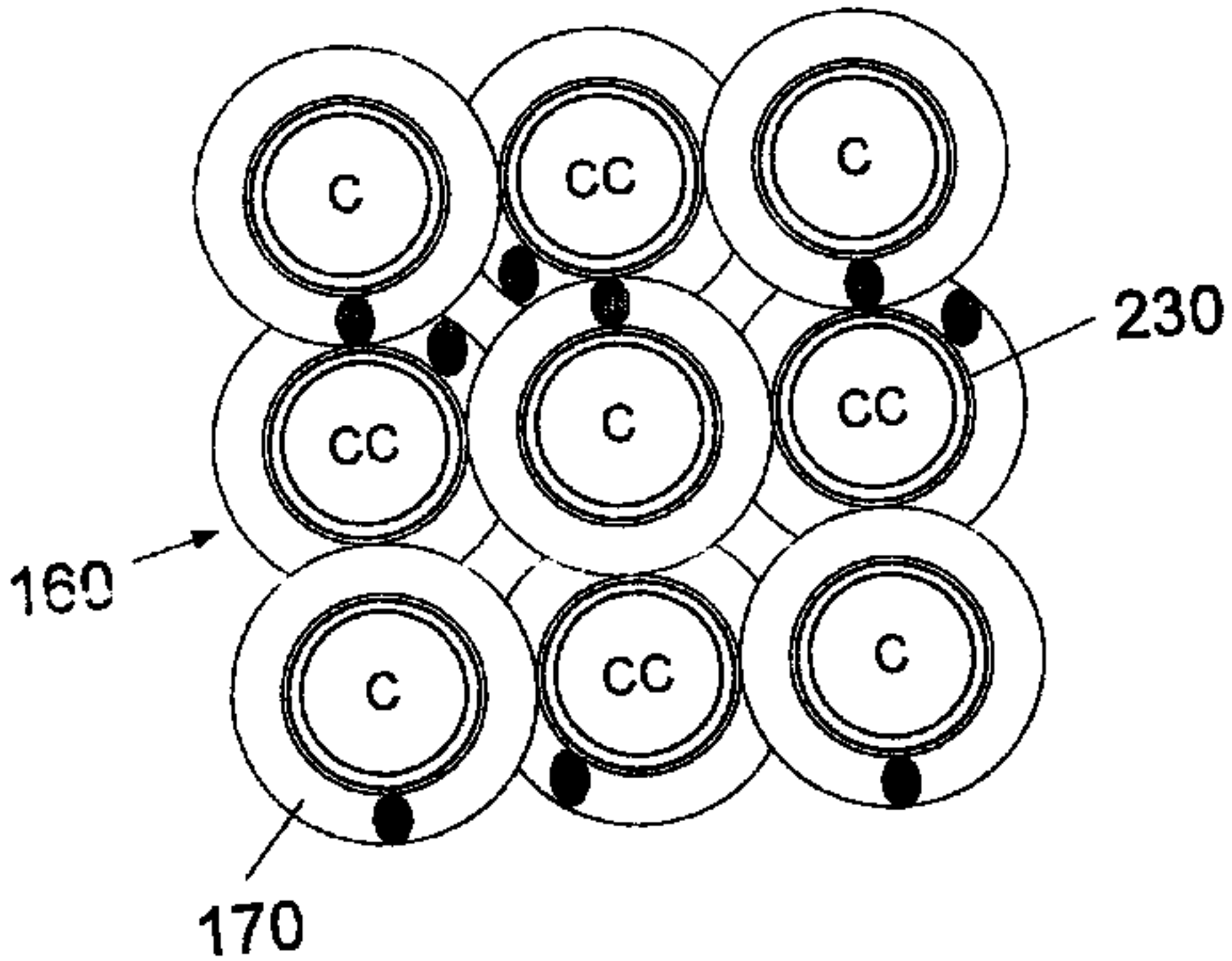
C
CC
C
230
CC
C
CC
160
C
CC
C
170

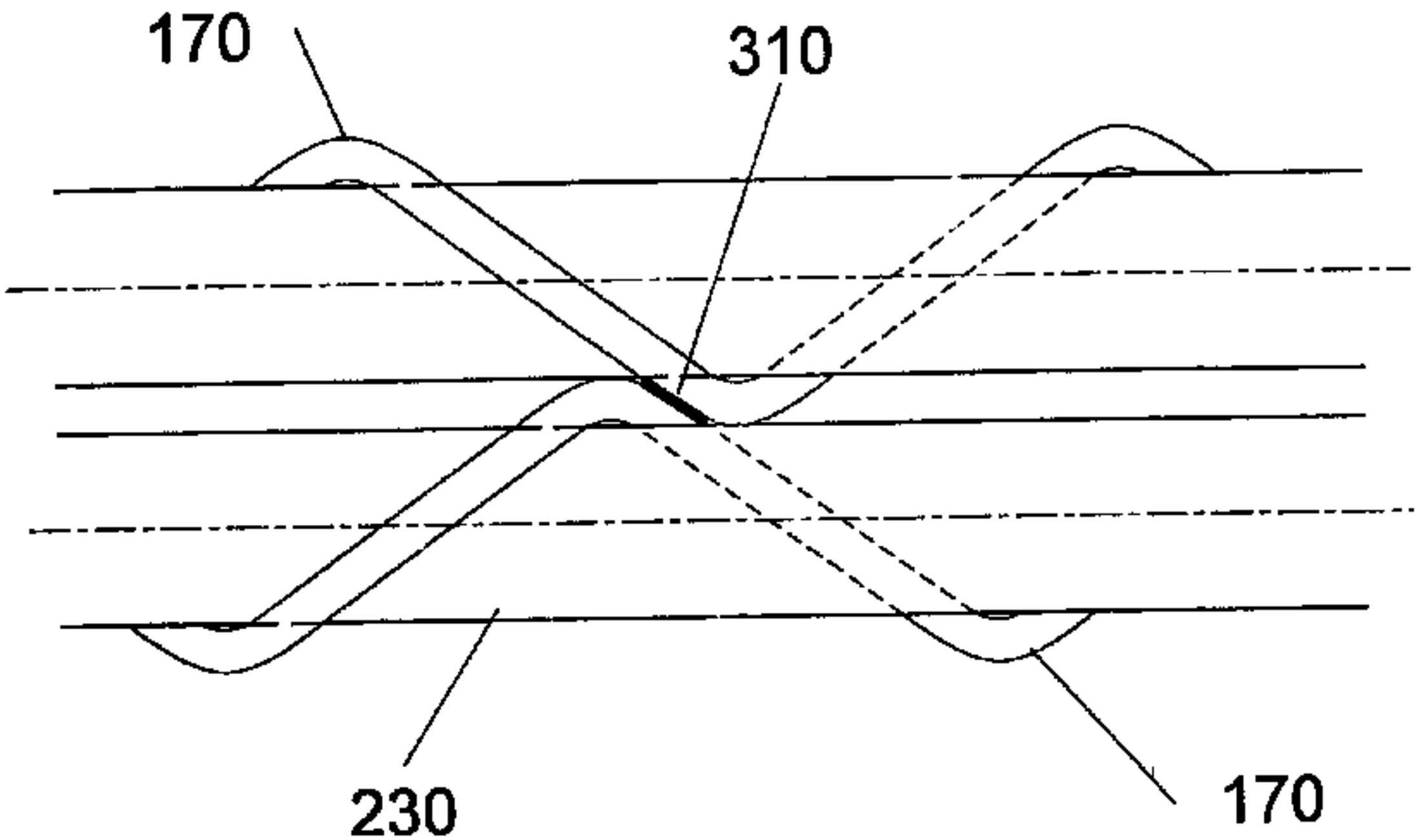
170
310
230
170