No. 777,066. PATENTED DEC. 13, 1904.

O. BOHN.

TRACK GAGE.

APPLICATION FILED NOV. 10, 1903.

NO MODEL.

Fig. 2

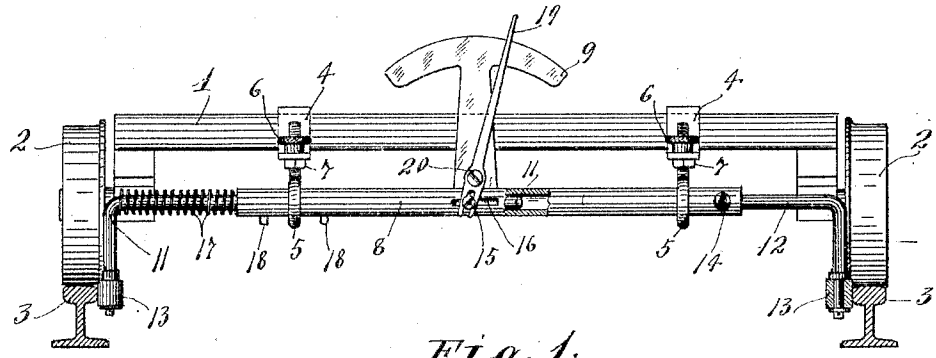

Fig. 1.

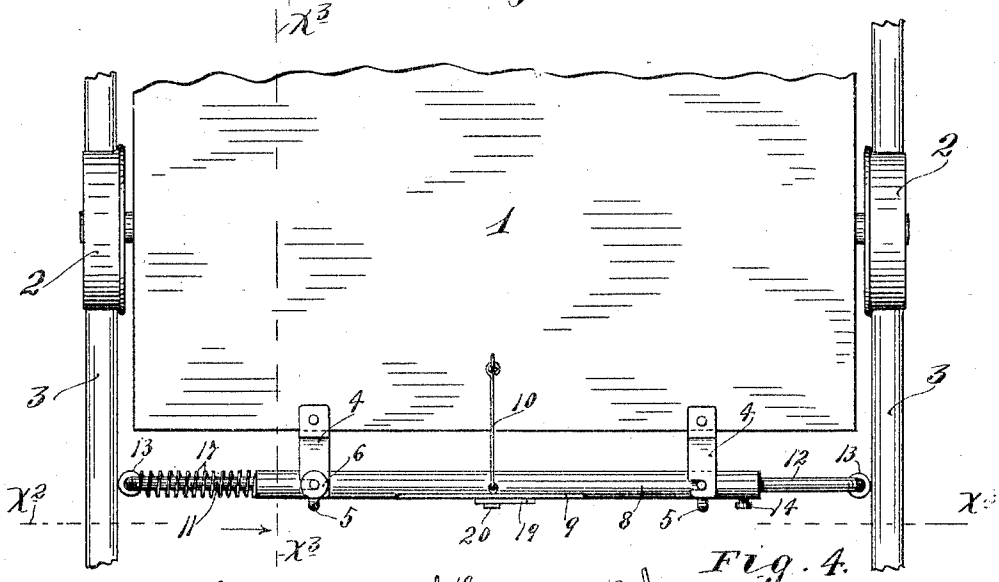

Fig. 3.

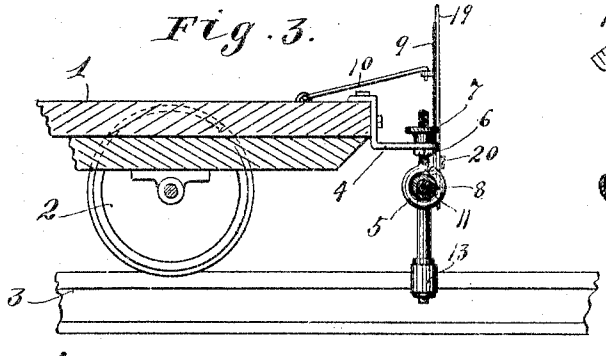

Fig. 4.

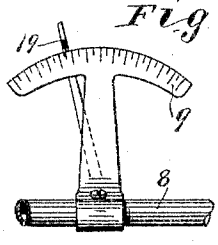

Witnesses.
A. H. Obsahl.
N. D. Kilgore.

Inventor
Otto Bohn.
By his Attorneys.
Williamson & Merchant

No. 777,066. Patented December 13, 1904.

UNITED STATES PATENT OFFICE.

OTTO BOHN, OF STILLWATER, MINNESOTA.

TRACK-GAGE.

SPECIFICATION forming part of Letters Patent No. 777,066, dated December 13, 1904.

Application filed November 10, 1903. Serial No. 180,547. (No model.)

To all whom it may concern:

Be it known that I, OTTO BOHN, a citizen of the United States, residing at Stillwater, in the county of Washington and State of Minnesota, have invented certain new and useful Improvements in Track-Gages; and I do hereby declare the following to be a full, clear, and exact description of the invention, such as will enable others skilled in the art to which it appertains to make and use the same.

My invention has for its object to provide a simple and efficient track-gage adapted to be applied to a hand-car or, for that matter, to any other car or truck movable over the rails, which gage will serve to indicate to the observer the gage or spread of the rails at all points along the line of travel.

To the above ends the invention consists of the novel devices and combinations of devices hereinafter described and defined in the claims.

Figure 1 is a plan view showing parts of rails, a portion of a hand-car, and my improved gage supported from and carried by the said car. Fig. 2 is a front elevation of the parts shown in Fig. 1, the rails being sectioned on the line x^2 x^2 of Fig. 1 and some parts of the gage being also shown in section. Fig. 3 is a vertical section on the line x^3 x^3 of Fig. 1; and Fig. 4 is a detail in rear elevation, showing the indicator of the gage.

The numeral 1 indicates the body, and the numeral 2 the wheels, of the hand car or truck.

The numeral 3 indicates the rails.

As a convenient means for supporting the improved gage, the body of the hand-car is provided with a pair of forwardly-projecting supporting-brackets 4, to the projecting ends of which a pair of heavy supporting-eyes 5 are secured, with freedom for vertical adjustments, the upturned threaded ends of the said eyes being passed through perforations in said brackets and having nuts 6 7, which firmly clamp the said brackets, respectively, on their lower and upper surfaces. Mounted to reciprocate freely through the supporting-eyes 5 is a sleeve 8, having rigidly secured to its intermediate portion a vertically-projecting indicator-segment 9, which is graduated, preferably, on its rear face, as shown in Fig. 4.

A short oscillating link 10 is pivotally attached to the body of the car and to the upper portion of the segment 9, as best shown in Fig. 3. This link permits the sleeve 8 and the segment 9 to move transversely of the car, but prevents them from rotating.

A rod 11 telescopes into one end of the sleeve 8 and another rod 12 telescopes into the other end of said sleeve. Both of these rods are provided with downturned ends, which are equipped with rollers 13, that engage with the inner flanges of the rails. The rod 12 is adjustably but rigidly secured to the sleeve 8 by means of a set-screw 14 or other suitable device. The rod 11 telescopes freely within said sleeve, but is held against rotation with respect thereto by means of a projecting screw or stud 15, that works through a slot 16 in said sleeve and is screwed into the said rod 11. A coiled spring 17 on the said rod 11 reacts against the adjacent end of the sleeve 8 and keeps the rollers 13 pressed against the flanges of the rails. As shown, stops 18 on the sleeve 8 coöperate with one of the supporting-eyes 5 to limit the sliding movements of the sleeve 8.

An indicator-pointer 19 is pivoted at 20 to the arm of the segment 9 and at its lower end is bifurcated at 21, so as to embrace the outer end of the screw or stud 15. The sector 9 is so graduated that movements of the pointer 19 with respect thereto will indicate inches and fractions thereof of the spreading movements of the two rollers 13 with respect to each other.

The action of the device under the traveling movement of the car is as follows: As long as the gage of the track—that is, the distance between rails—remains constant there will be no movement whatever of the pointer 19 with respect to the segment 9; but the body of the car may, nevertheless, move transversely back and forth with respect to the indicator without affecting the reading of the indicator. Any variation in the gage of the track will, however, be instantly indicated by a movement of the index-pointer with respect to the said segment. As is evident, the supporting-eyes 5 must be so adjusted as to bring the rollers 13

into the proper altitude for engagement with the rail-flanges.

The device above described while extremely simple and of small cost is efficient for the purposes had in view and has few parts to get out of order.

The device is of course capable of modification within the scope of my invention, as herein set forth and claimed.

What I claim, and desire to secure by Letters Patent of the United States, is as follows:

1. The combination with a truck having vertically-adjustable gage-supporting bearings, of a sleeve supported by said bearings, with freedom for movements transversely of the truck, a pair of roller-equipped rods telescoping into said sleeve, one thereof being rigidly but adjustably secured thereto and the other being free for telescopic movement, a spring for keeping the said rollers pressed against the rails, an indicator-segment carried by said sleeve, an indicator-pointer pivoted to said segment, and a projection carried by the loosely-telescoping rod, working through a slot of said sleeve and operating on said pointer, substantially as described.

2. The combination with a truck having the supporting-brackets 4, of the supporting-eyes 5 having nuts adjustably securing them to said brackets, the sleeve 8 slidably mounted in said bearing-eyes, the roller-equipped rods 11 12 telescoping into said sleeve, the latter being rigidly secured thereto, the indicator-segment 9 carried by said sleeve, the rod 10 loosely connecting said segment to the truck-body, the pointer 19 pivoted to said segment and cooperating therewith, and the stud or projection 15 carried by the inner end of said rod 11, working through a slot 16 of said sleeve and operating on said pointer, substantially as described.

In testimony whereof I affix my signature in presence of two witnesses.

OTTO BOHN.

Witnesses:
F. W. GAIL,
A. J. PERRON.