June 24, 1930. W. E. BOCK 1,766,213

WASHING MACHINE

Filed Feb. 23, 1926 7 Sheets-Sheet 1

Fig. 1

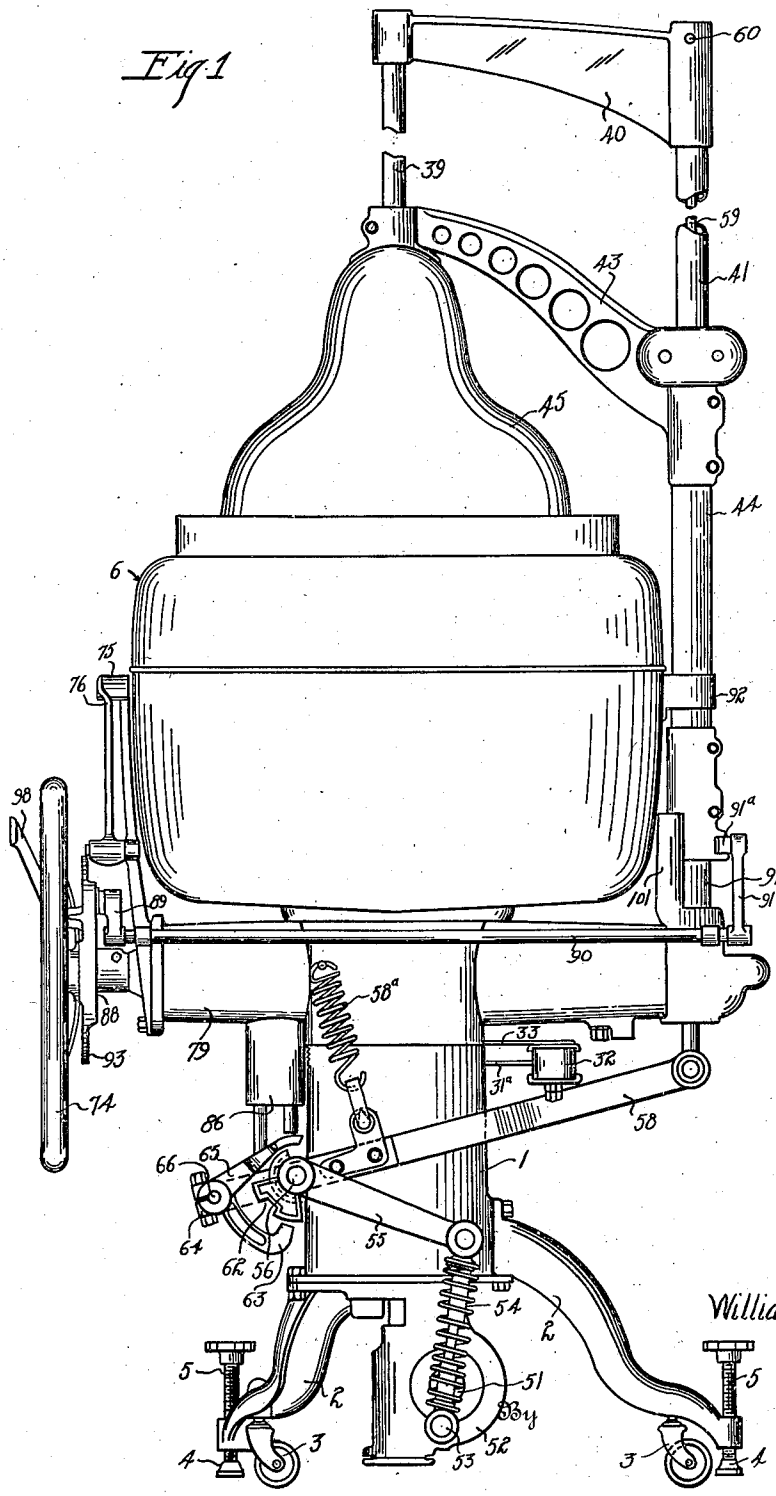

Inventor

William E. Bock

Whittemore & Hulbert & Whittemore & Belknap Attorneys

June 24, 1930. W. E. BOCK 1,766,213

WASHING MACHINE

Filed Feb. 23, 1926 7 Sheets-Sheet 2

Fig. 2

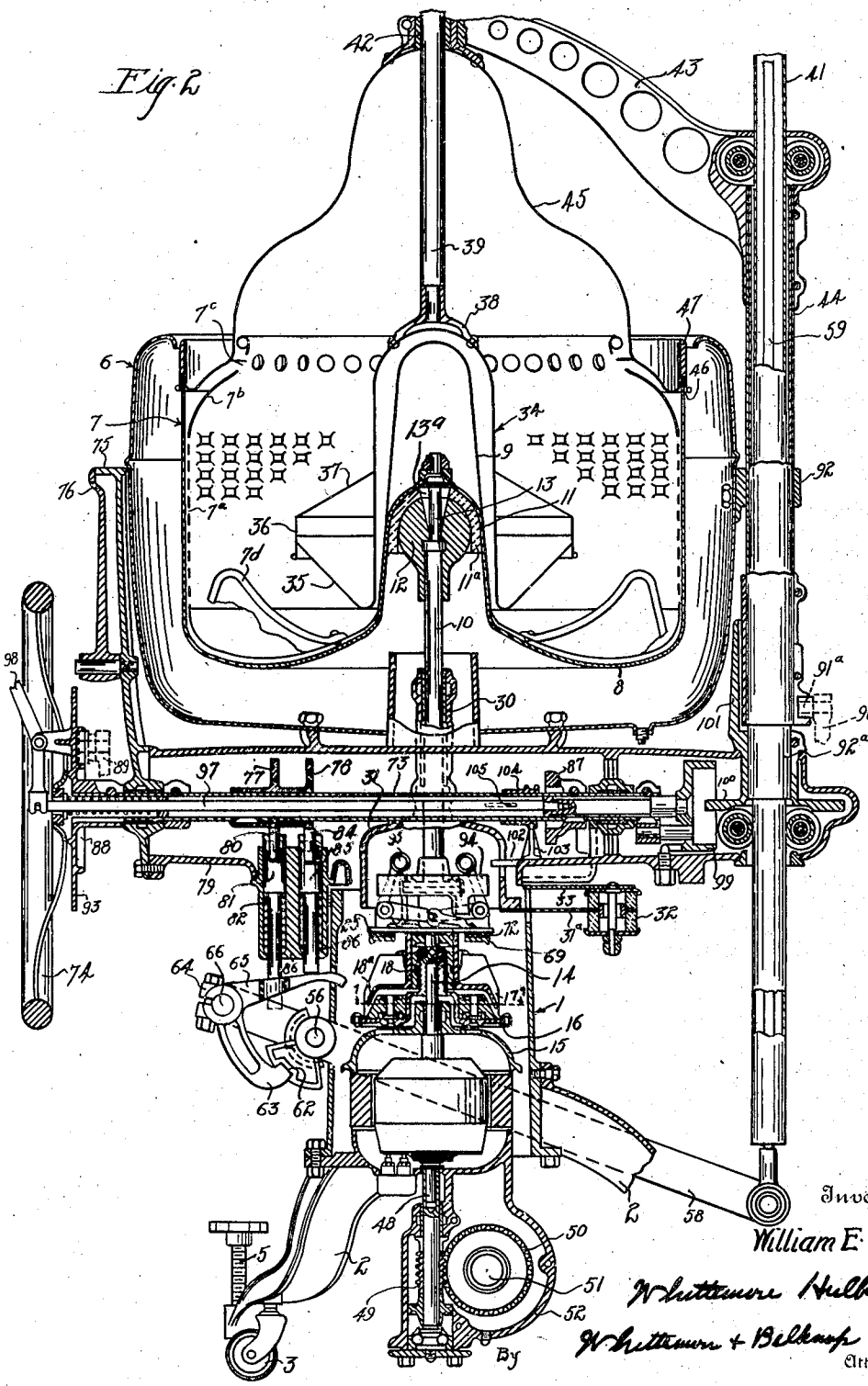

Inventor
William E. Bock
Whittemore Hulbert
Whittemore + Belknap
Attorneys

June 24, 1930. W. E. BOCK 1,766,213

WASHING MACHINE

Filed Feb. 23, 1926 7 Sheets-Sheet 3

Fig. 3

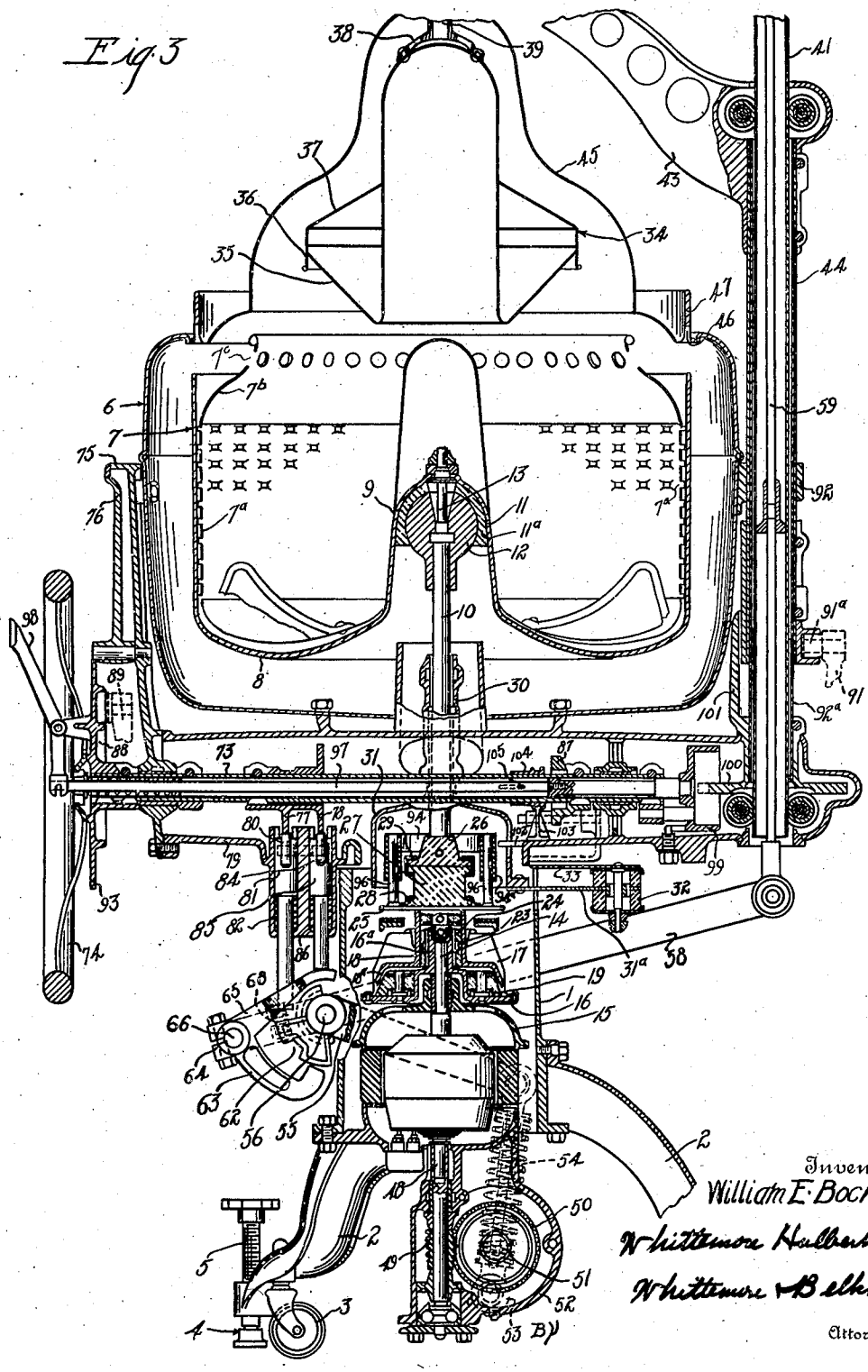

Inventor
William E. Bock
Whittemore Hulbert
Whittemore & Belknap
Attorneys

June 24, 1930. W. E. BOCK 1,766,213

WASHING MACHINE

Filed Feb. 23, 1926 7 Sheets-Sheet 4

Fig. 4

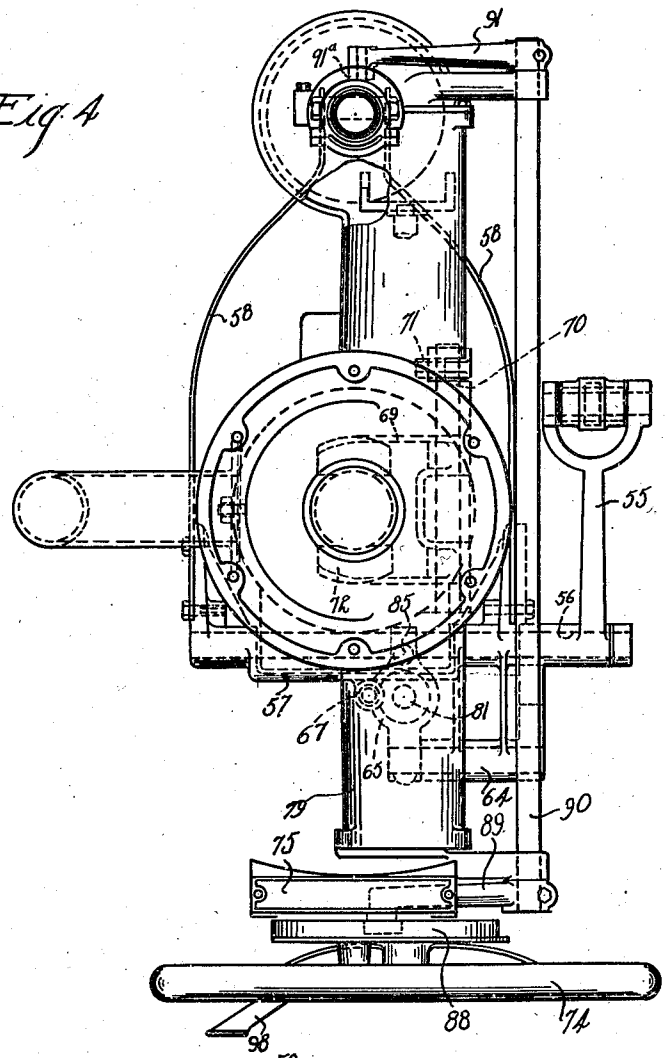

Fig. 5

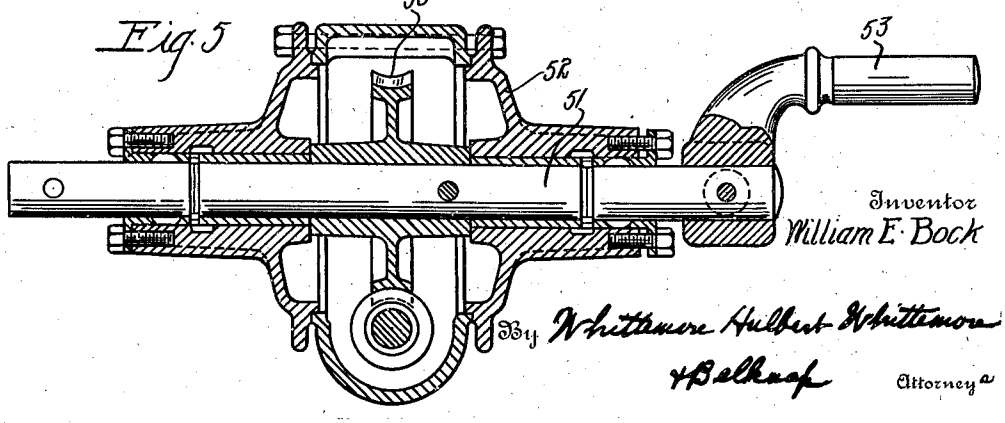

Inventor
William E. Bock

By Whittemore Hulbert Whittemore & Belknap Attorneys

June 24, 1930. W. E. BOCK 1,766,213

WASHING MACHINE

Filed Feb. 23, 1926 7 Sheets-Sheet 5

Fig. 6

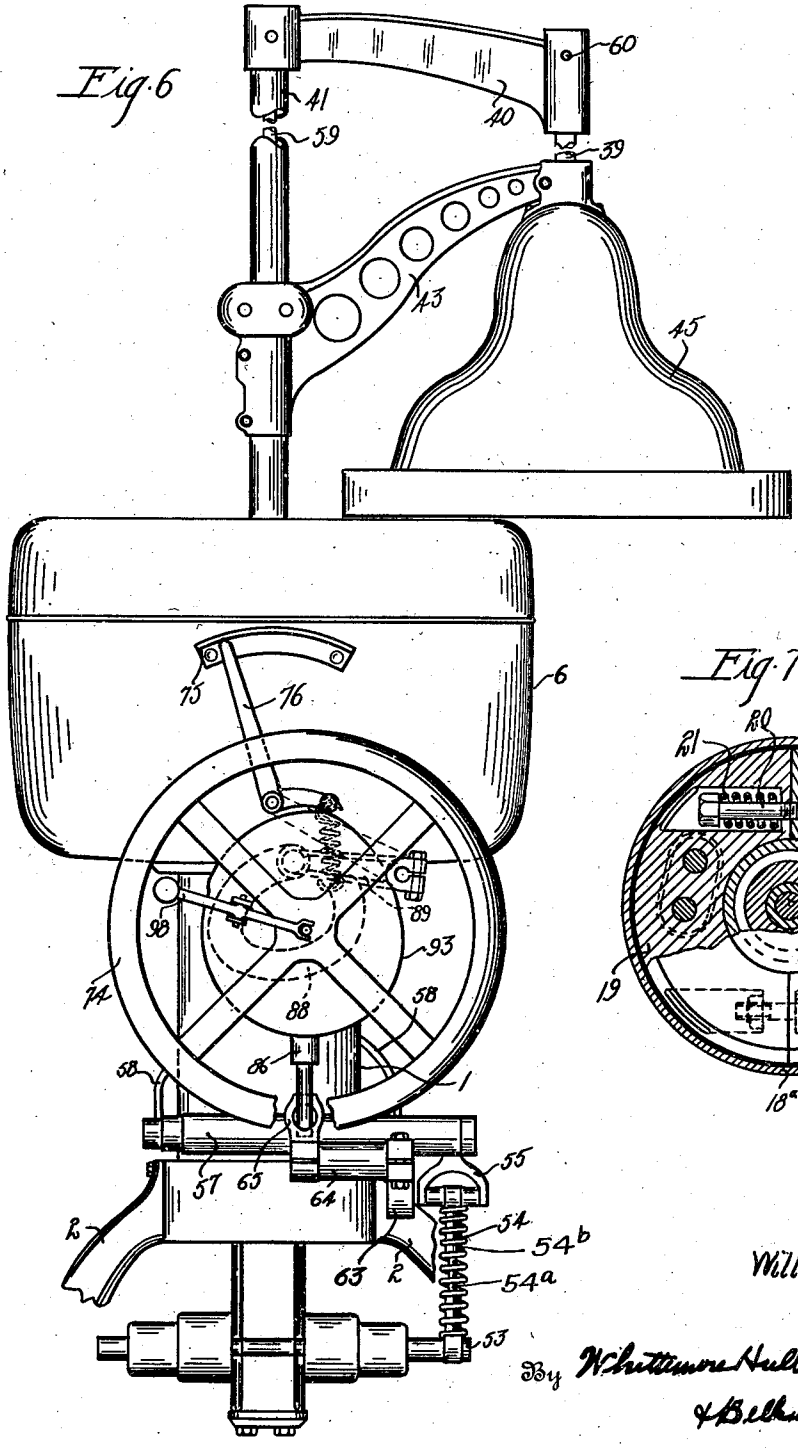

Fig. 7

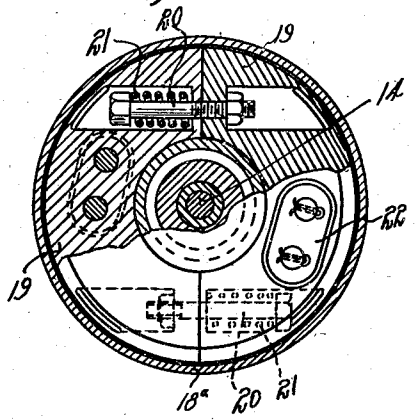

Inventor
William E. Bock.

By Whittemore Hulbert Whittemore & Belknap

Attorneys

June 24, 1930. W. E. BOCK 1,766,213

WASHING MACHINE

Filed Feb. 23, 1926 7 Sheets-Sheet 6

Fig. 8

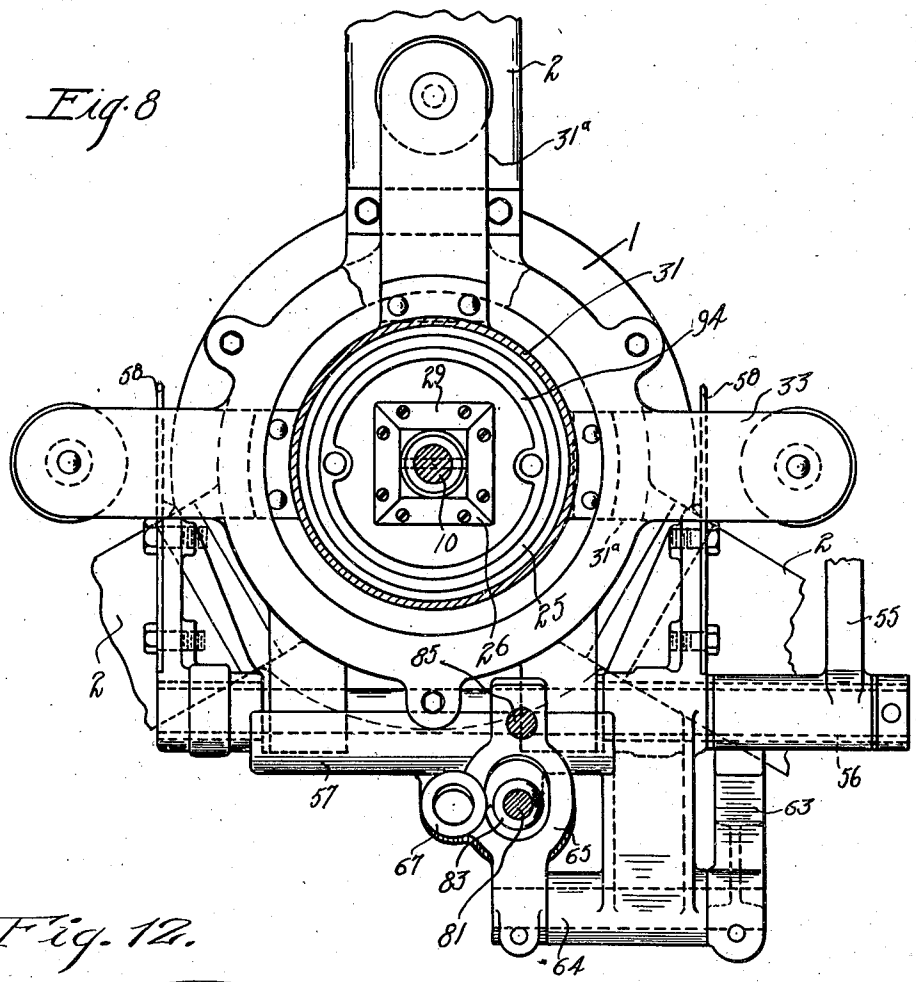

Fig. 12.

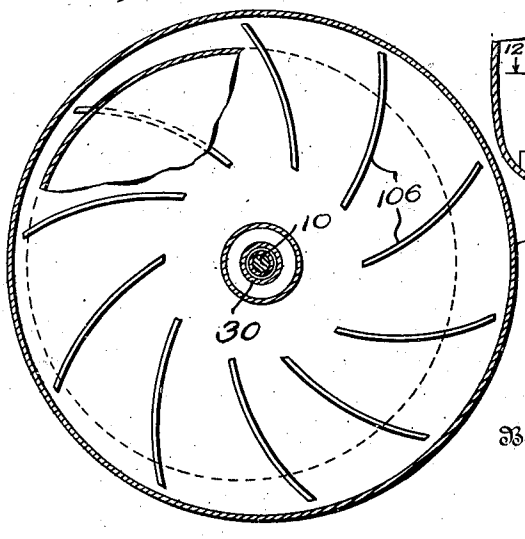

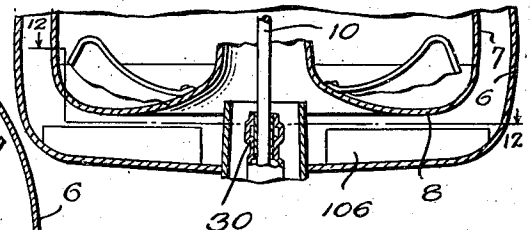

Fig. 13.

Inventor
William E. Bock

By Whittemore Hulbert Whittemore & Belknap Attorneys

June 24, 1930. W. E. BOCK 1,766,213

WASHING MACHINE

Filed Feb. 23, 1926 7 Sheets-Sheet 7

Fig. 9

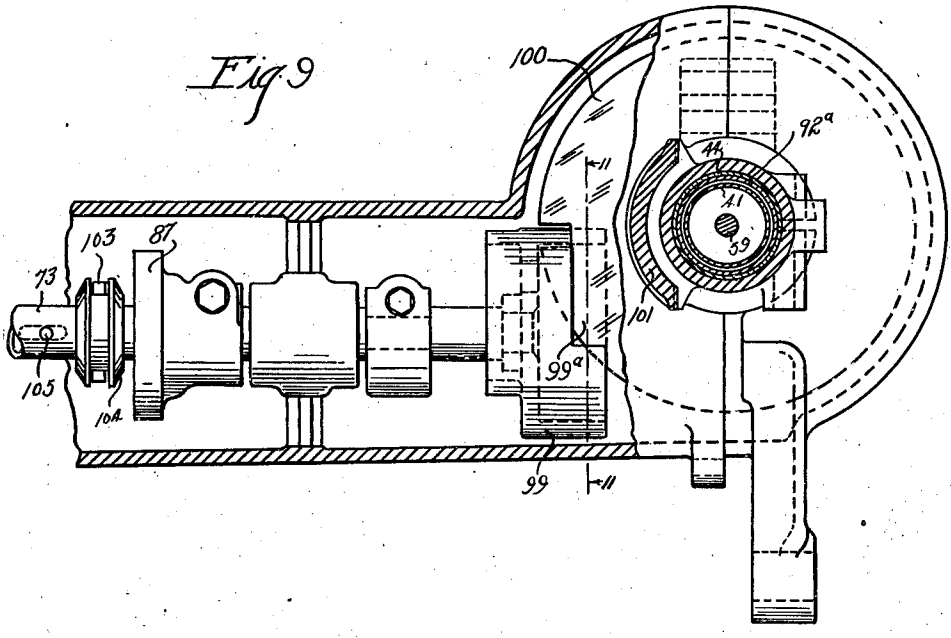

Fig. 11

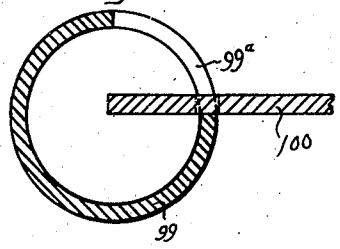

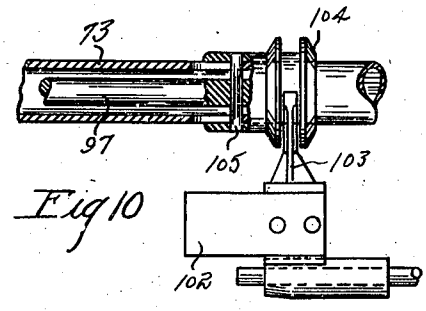

Fig 10

Inventor
William E. Bock

By Whittemore Hulbert Whittemore & Belknap
Attorneys

Patented June 24, 1930 1,766,213

UNITED STATES PATENT OFFICE

WILLIAM EMIL BOCK, OF TOLEDO, OHIO, ASSIGNOR, BY MESNE ASSIGNMENTS, TO THE BOCK LAUNDRY MACHINE COMPANY, OF TOLEDO, OHIO, A CORPORATION OF OHIO

WASHING MACHINE

Application filed February 23, 1926. Serial No. 90,197.

The invention relates to washing machines of that type in which the operations of washing the clothes and centrifugal extraction of the liquid are successively performed in the same container. A serious difficulty encountered with this type of machine is due to lack of balance during centrifugation. It is never possible to uniformly distribute the clothes in the container by the operation of the washing mechanism and therefore the revoluble container is initially out of balance. Furthermore, even if it were possible to balance the container and its load before centrifugation, it would lose its balance as an incident to the shifting of the load and the removal of the liquid therefrom. Consequently such machines are never capable of being revolved at a high rate of speed and the extraction of the liquid is very incomplete.

It is the primary object of the present invention to obtain a construction which is highly efficient in both the washing and extraction operations and to this end the invention consists in various features as hereinafter set forth.

In the drawings;

Figure 1 is a side elevation of the machine.

Figure 2 is a vertical central section therethrough, showing adjustment of the machine for the washing operation.

Figure 3 is a view similar to Figure 2 showing the parts adjusted for the drying operation.

Figure 4 is a plan view of the machine with the upper portion removed.

Figure 5 is a section in the plane of the crank shaft.

Figure 6 is a view similar to Figure 1 showing the cover removed for loading the machine.

Figure 7 is a horizontal section on line 7—7 of Figure 2.

Figure 8 is a sectional plan view through the upper portion of the pedestal.

Figure 9 is a sectional plan view in the plane of the control shaft.

Figure 10 is a sectional side elevation of a portion of Figure 9.

Figure 11 is a section on line 11—11 of Figure 9.

Figure 12 is a horizontal section on line 12—12 of Figure 13 showing the manner of relieving centrifugally developed air pressure.

Figure 13 is a vertical central section of Figure 12.

My improved machine utilizes in part a principle of construction forming the subject matter of a prior Patent No. 1,483,326, issued February 12, 1924. This essentially is a means of automatically balancing a loaded receptacle during rotative acceleration thereof and comprises a universally rockable container mounted on a floating support. In the present machine, however, the same receptacle is used for both washing and extracting operations and for the former the container must be more rigidly supported. Also provision must be made for retaining a suitable quantity of liquid for the washing operation and for quickly and easily removing the same prior to extraction. Still further, where a single motor is used for both operations, there is the necessity to provide alternative driving connections between said motor and the driven parts without interference with the free floating action during centrifugation. To meet the conditions just described I have devised a machine of the following construction:

Generally described my improved machine comprises a substantial cylindrical receptacle for receiving the articles to be washed and the washing fluid, said receptacle being provided with a perforated lining slightly spaced from the outer imperforate wall to form a fluid passage therebetween. This receptacle is arranged within an outer casing which is mounted on the pedestal or other support and within which is arranged the motor. The axis of this motor extends vertically and one end of the rotor shaft is connected through the medium of a slip clutch with an aligned vertical shaft extending upward centrally within the receptacle. The upper end of the shaft is connected by a universal joint with the receptacle to permit rocking move-

ment thereof and there is also a second universal joint which permits the rocking or gyration of the shaft about a lower centre. This latter movement is however opposed by resilient means tending to hold the shaft normally vertical so that when the receptacle is revolved at a high rate of speed it is permitted to rotate about its true centre of mass or in dynamic balance. Such rapid revolution will centrifugally force any liquid in the receptacle radially outward through the perforated lining and upward between the same and the imperforate outer wall over the upper edge of the latter and into the outer casing from which it may be discharged into a drain.

The washing is effected in the same receptacle by any suitable means for agitating the contents thereof. Preferably this is accomplished by a single vertically reciprocating plunger which is actuated by a mechanism driven from the same motor. This plunger, when not in use and during the rapid rotation of the receptacle, is withdrawn into a recess in the cover and the actuating mechanism is declutched. On the other hand, when the plunger is in operation, the high speed drive connection between the motor and receptacle must be declutched, the cover for said receptacle closed and sealed to prevent the slopping out of the liquid, and support afforded to hold the receptacle from rocking and to take the thrust of the plunger. It is therefore necessary to provide manually operable control mechanism for effecting these various adjustments together with safety appliances which prevent adjustment during the rapid revolution of the receptacle, the detail construction being as follows:

1 is a hollow pedestal supported at its lower end by the leg members 2 preferably provided with casters 3 and with feet 4 having threaded shanks 5 for adjusting the same so as to take the weight from the casters. At the upper end of the pedestal 1 is an enlarged housing 6 within which is arranged the receptacle 7 for holding the clothes to be washed, rinsed and dried. This receptacle is preferably of substantially cylindrical form having a bottom portion 8 and an upwardly extending central hollow post 9 surrounding which is an annular chamber for receiving the clothes and the washing fluid. The receptacle is also provided with a perforated lining 7^a slightly spaced from the outer cylindrical wall and terminating at its upper end in an inwardly extending flange 7^b. Extending centrally within the hollow post 9 is a vertical rotary shaft 10 provided at its upper end with a universal pivotal coupling to the post preferably consisting of a spherical socket member 11, a ball 12 secured to the shaft 10 and an intermediate rubber lining 11^a. 13 is a headed shank having a threaded portion for clamping the same to said socket and depending centrally therefrom into a tapering recess formed within the ball. The inner end 13^a of this shank is of rectangular cross section and segmental form to engage a similar rectangular recess in the centre of the ball so as to communicate a torque from one to the other without interfering with freedom for universal rocking movement. The shaft 10 extends downward within the hollow pedestal 1 in axial alignment with the shaft 14 of an electric motor 15 mounted in the lower portion of said pedestal. These shafts are not however rigidly connected to each other but are coupled through the medium of a slip clutch permitting the motor to gradually pick up the load. There is also provided a universal coupling and resilient means for yieldably resisting the rocking of one shaft with respect to the other.

Clutch

Any suitable construction of slip clutch may be used but preferably it is constructed as follows:

16 is a disk having a central hub 16^a which is pinned or otherwise rigidly connected with the shaft 14. 17 is a housing peripherally secured to the disk 16 and extending upward therefrom. 18 is a clutch member having a conical flange 18^a surrounding and spaced from the hub of the disk 16. 19 are complementary brake shoes arranged within the space between the conical flange and the hub. These are yieldably connected to each other by shanks 20 engaging springs 21 housed in recesses within said shoes. The shoes 19 are also connected through the medium of swinging links 22 to the disk 16, the arrangement being such that upon the rotation of said disk centrifugal force will tend to separate the shoes from each other and to press the same against the conical flange 18. The clutch member 18 has a hollow shank member 23 slidably mounted on a bushing 24 surrounding a portion of the hub of the disk 16, and at the upper end of the member 18 is a flanged head 25. This head is spaced from a parallel head 26 at the lower end of the shaft 10 and between said heads there is inserted a yieldable cushion 27 preferably formed of rubber. The cushion is flanged at its upper and lower ends and the flanges are connected by clips 28 and 29 to the heads 25 and 26. Thus, the torque of the clutch member 18 will be transmitted to the shaft 10 through the medium of the parts just described and at the same time said shaft is free to oscillate by the yielding of the cushion 27.

Yieldable shaft support

The shaft 10 is further supported by a journal bearing 30 which is formed at the

upper end of a hollow member 31 surrounding and spaced from the cushion member 27. This member 31 is yieldably supported by a series of radial spring arms 31ª non-symmetrically arranged about the same and connected at their outer ends through the medium of cushion members 32 with supporting spring arms 33 extending outward from the pedestal 1. The plane of the arms 33 is offset from the plane of the bearing 30 so that any oscillation of the bearing 30 permitted by the flexing of these arms will be about a centre coinciding with that of the cushion member 27. Consequently the shaft 10 while normally held in alignment with the shaft 14 by the resiliency of the springs 31ª and 33 and cushions 27 and 32 is nevertheless permitted to move angularly so as to oscillate or gyrate about the centre of mass of the loaded receptacle 7. Thus, during the rapid revolution of the receptacle for the extraction operation as will be hereinafter set forth, the revolving parts will be in dynamic balance.

Plunger operating mechanism

As has been stated, I preferably agitate the clothes within the receptacle by a reciprocating plunger. This plunger 34 is hollow to surround the post 9 and the surrounding portion 35 is preferably of inverted conical form terminating in a depending flange 36. The top 37 of the surrounding portion of the plunger has the apertures 38 at its upper end to vent the chamber therein. Thus, when the plunger is vertically reciprocated it will displace the clothes in the washing fluid within the receptacle 7 alternately in a radially outward and radially inward direction while the venting of the central chamber of the plunger avoids any tendency to suck the clothes into the same. The plunger is actuated by a vertically extending rod or tube 39 which is connected to an arm 40 mounted on a vertical rod or tube 41 arranged at one side of the housing 6. The rod 39 is also guided by passing through a bearing 42 in an arm 43 which extends from a tubular bearing 44 in which the rod 41 is slidably supported. The arm 43 also carries a cover 45 for the housing 6 which cover is so fashioned as to receive the plunger 34 when drawn upward out of the receptacle 7. The cover 45 is adapted to form a sealing joint with the upper edge of the receptacle 7 preferably by being provided with the annular groove 46 for receiving the upper edge of said receptacle and having a gasket 47 therein for contacting the said edge. This arrangement will prevent any slopping over of the washing fluid during agitation of the same by the plunger.

The reciprocation of the rod 41 occurs only in certain positions of adjustment of the machine and is effected through the following mechanism. The motor 15 is provided with a downwardly extending rotor shaft 48 having a worm 49 thereon which meshes with the worm gear 50 on the horizontally extending shaft 51, these parts being enclosed in the housing 52. At one end of the shaft 51 is a crank 53 connected by a pitman 54 with a rock arm 55 on a rock shaft 56 journaled in bearings on the pedestal 1. Sleeved upon this rock shaft is a bifurcated rock frame 57 having arms 58 extending on opposite sides of the pedestal 1 connected to each other at their outer ends and substantially in alignment with the axis of the tubular rod 41. 59 is a small flexible rod pivotally attached at its lower end to the arms 58 and extending upward within the tubular rod 41 being connected at its upper end by the pin 60 to the arm 40. The flexibility of this rod is sufficient to permit the oscillation of the arms 58 about the axis of the shaft 56 and to communicate to the tubular rod 41 a rectilinear movement in the bearing 44. In other words the flexing of the rod 59 within the tubular rod 41 compensates for the lateral deflection of the arc through which the lower end of said rod passes. The rock frame 57 being sleeved upon the rock shaft 56, will not be directly actuated thereby. There is, however, provision for coupling these parts to each other comprising a notched segment 62 preferably integral with the rock arm 55 and a dog 63 for engaging the notch of said segment and pivotally attached to the rearwardly extending portion 64 of the rock frame 57. An actuating arm 65 for the dog 63 is attached to the opposite end of a rock shaft 66 forming the pivots for said dog. This arm has a portion 67 bearing against a spring 68 in a recess in the frame 57, the arrangement being such that the tension of this spring presses the dog 63 against the segment 62 to automatically effect engagement with the notch thereof. Under certain conditions, however, the arm 65 is depressed against the tension of the spring so as to disengage the dog from the notch and permit oscillation of the rock arm 65 without imparting any movement to the frame 57 and arms 58. Under such conditions no movement is imparted to the rods 41 and 37 or to the plunger 34 carried thereby so that the receptacle 7 may be spun through the high speed connection to the shaft 10. On the other hand, when the plunger is to be operated, the driving connection between the motor and the shaft 10 must be declutched which is effected by the following mechanism.

Declutching mechanism

Adjacent to the flanged head 25 there is arranged a bifurcated rock arm 69 mounted

on a rock shaft 70 journaled on the pedestal. 71 is an actuating rock arm for the rock shaft 70 which extends in operative relation to a cam to be hereinafter described which imparts a rocking movement thereto. Thus, when actuated, the bifurcated arm 69 is pressed upward against the flange 25 lifting the clutch member 18 so as to disengage the same from the cooperating clutch members through which it is driven from the motor. The arm 69 is preferably provided with brake facings 72 for engaging the face of the flange 25 to assist in checking the momentum of the revolving parts. It also forms the support for the receptacle 7 during the operation of the plunger therein acting through the medium of the cushion 27 and shaft 10 and socket coupling.

Control mechanism

With the construction as thus far described it will be understood that by suitable adjustment the plunger actuating mechanism and the spinning mechanism for the receptacle 7 may be alternatively operated. The control for these and other operations of the machine is preferably effected through the actuation of a single control shaft 73 which is mounted in bearings at the upper end of the pedestal and just below the housing 6. At one end this control shaft is provided with a hand wheel 74 for actuating the same and adjacent to this hand wheel is an indicator plate 75 cooperating with an index 76 to designate the various positions of adjustment. The shaft 73 has mounted thereon the adjacent cams 77 and 78 which together with other members mounted on this shaft, are enclosed in a housing 79 at the upper end of the pedestal. The cam 77 is adapted to contact with the roller 80 on a vertical plunger 81 slidable in bearings in the housing and normally held upward by a spring 82. The lower end of this plunger extends into proximity to a bearing 83 at the rear of the rock frame 57 so that depression of the plunger by the cam will cause the rocking of said frame and through the connecting parts, the lifting of the rods 41 and 39 and raising of the plunger 34 from the receptacle 7 into the recess in the cover 45. The cam 78 similarly actuates a roller 84 on a plunger 85 held up by a spring 86, the lower end of said plunger extending into proximity to the actuating arm 65 for the dog 63. Thus, the actuation of said cam 78 will disengage the dog 63 from the notched segment 62 permitting the free oscillation of the rock arm 55 without imparting movement to the rock frame 57.

At another point on the control shaft 73 there is mounted a cam 87 for actuating the arm 71 through which the arm 69 is operated to release the clutch and apply the brake. Still another movement effected by the control shaft is the actuation of the cam 88 which operates a rock arm 89 on a rock shaft 90. This shaft extends parallel to the shaft 73 and is provided at its opposite end with a rock arm 91 which has a roller 91ª engaging a segmental groove in the lower end of the tubular bearing 44. This bearing 44 is slidable and rotatable in a fixed bearing 92 on the housing 6 and also telescopically engages a guide tube 92ª within the same. This permits the rock arm 91 when raised or lowered to correspondingly raise or lower the bearing 44 and through the medium of the rock arm 43 to raise or lower the cover 45. The construction also permits said cover when in raised position to be swung with the arm 43 out of registration with the receptacle 7. Another cam 93 on the shaft 73 actuates the index 76.

Safety appliances

To avoid danger of accidents I have provided a number of safety devices for controlling the operation of the adjusting mechanism particularly where the machine is running at high speed, the construction being as follows:

To prevent opening the machine during the rapid rotation of the receptacle 7, there is a centrifugally operated lock. This comprises a ring 94 surrounding the cushion 27 and within the hollow member 31 being slidably mounted on bearings 94ª on the flanged member 25 which hold it in concentric relation to the axis of the shaft but permit axial movement thereof. 95 are pivotal arms mounted on the member 25 and arranged to be thrown outward centrifugally, said arms being connected to laterally extending pins 96 which engage the ring 94 to move the same upward. 97 is a rod passing centrally through the shaft 73 which is hollow, the outer end of said rod being connected to a lever 98 adjacent to the hand wheel 74. The rod 97 at its inner end carries a flanged head 99 which has an interlocking engagement with the flange 100 on a swivel bearing member 101 secured to the lower end of the tubular bearing 92ª. The bearing 101 also overlaps the lower end of the bearing 44 and these parts are so fashioned as to prevent relative rotary movement while permitting free axial movement thereof. The arrangement is such that the interlocking of the flanged head 99 and flange 100 will prevent rotation of the bearing 101 thereby preventing rotation of the bearing 44 so that the cover 45 cannot be swung out of registration with the receptacle 7. On the other hand, by actuating the lever 98 and moving the rod 97 the flanged head 99 may be withdrawn from the flange 101 sufficiently to permit rotation of the latter and the swinging of the cover. However, the rotation of the

member 101 will cause the flange 100 thereof to lock the flanged head 99 from rotation and as the latter is non-rotatively connected to the rod 97, it will lock said rod from rotation. Thus, it will be impossible to turn the hand wheel 74 to adjust any of the controls while the cover is removed from the receptacle 7. Furthermore, the operation of the lever 98 and rod 97 is rendered impossible during the rapid rotation of the receptacle by the ring 94 previously described in cooperation with the finger 102 which is held from movement by said ring in raised position thereof. This finger 102 is connected to a forked arm 103 engaging a collar 104 slidable on the shaft 73 but connected through a pin 105 passing through a slot in said shaft to the rod 97. Thus, whenever the rotation of the shaft 10 is at sufficient speed to centrifugally operate the arms 95, the ring 94 will be lifted into interfering position with the finger 102 which, through the parts just described, will hold the rod 97 from movement thereby preventing disengaging of the flanged head 99 from the flange 100. In this position of the parts only a limited rotation of the hand wheel 74 and shaft 73 is possible, this being permitted by a cut away segment 99^a in the member 99.

To load the machine for washing, the hand wheel 74 is first turned to the position where the index is opposite the position "Stop" on the indicator segment. This will turn the flanged head 99 into a position where a slot 99^a in the flange thereof registers with the flange 100 of the member 101 thereby permitting said member to be rotated. The cam 88 has meanwhile actuated the arm 89, rock shaft 90 and rock arm 91 to lift the bearing 44, which, by raising the arm 43, lifts the cover 45 so as to clear the receptacle 7 and housing 6. Thus, the operator is permitted to swing the arm 43 carrying the cover out of registration with the top of the receptacle and permitting the introduction of the clothes to be washed and the washing fluid. The operator then returns the cover into registration with the receptacle and adjusts the wheel 74 into the position designated by the indicator as "Wash." This first turns the flanged head 99 so as to lock the flange 100, thereby holding the member 101 and bearing 44 from rotation. Also the cam 88 is turned to a position to lower the cover 45 engaging the groove 46 thereof with the upper edge of the receptacle 7 and pressing the latter against the gasket 47 to produce a seal. A further movement resulting from the adjustment of the wheel 74 to the wash position is the movement of the cams 77 and 78 so as to release pressure upon the corresponding plungers 81 and 85 which are raised by their respective springs 82 and 86. The lifting of the first of these plungers frees the rock frame 57 permitting the movement of the same together with the arms 58 attached thereto. The lifting of the plunger 85 frees the arm 65 and permits the spring 68 to press the dog 63 against the notched segment 62. Thus, in the first reciprocation of the rock arm 55 the dog will engage the notch coupling the rock frame 57 to said rock arm. One other movement effected by the last mentioned adjustment of the wheel 74 is the turning of the cam 87 so as to actuate the arm 71, rock shaft 70 and brake arm 69 pressing the latter upward against the flange 25 and moving the clutch member 18 to released position.

Washing operation

The operator next turns the electric switch (not shown) for starting the motor 15 which through the medium of the shaft 48 and worm gearing 50 actuates the crank 53 and pitman rod 54 to impart a rocking movement to the arm 55. This will reciprocate the rock frame 57 and arm 58 attached thereto, raising and lowering the rods 59 and 41 and imparting a similar reciprocating movement to the rod 39 and plunger 34. Inasmuch, however, as the clothes in the receptacle may interfere with the full reciprocating movement of the plunger, a yielding element is placed in this drive connection. Preferably this element is the pitman 54 which, as shown, is formed with a telescopic rod 54^a and a spring 54^b for yieldably resisting elongation of said rod. Thus, the lifting of the plunger is a positive movement but its depression is only effected through the medium of the spring 54^b which will yield when necessary.

The agitation of the clothes by the reciprocation of the plunger 34 in the receptacle 7 will effect the washing, this being assisted by the arrangement of a series of inclined fins 7^d on the bottom of the receptacle which cause a slow rotation of the mass within said receptacle. The clothes are also alternately moved radially inward and outward and the fluid displaced by the downward movement of the plunger is directed inward by the inclined flange 7^b.

Discharge of liquid

At the completion of the washing operation the operator turns the hand wheel 74 to the indicated position "Flood". This actuates the cam 88 which through the mechanism previously described raises the cover 45 to free the upper edge of the receptacle 7 while still closing the aperture in the outer casing 6. As the plunger 34 continues its reciprocation the liquid will be displaced, the floating scum thereon being forced outward through the aperture 7^c in the flange

7b. This together with liquid passing through the perforated lining, will escape over the upper edge of the receptacle 7 into the casing 6 from which it passes to the drain 6'. To complete the discharge the hand wheel may be adjusted to the position "dry" which first depresses the plungers 81 and 85 to raise the plunger 34 into the cover 45 and to declutch the dog 63 from the notched segment 62. The arm 69 is also depressed out of contact with the flange 25 permitting the clutch member 18 to engage with the cooperating clutch members and to impart a gradual rotative acceleration for the shaft 10 and receptacle 7. This is continued until all of the liquid is thrown out centrifugally over the top of the receptacle 7.

Rinsing operation

When all of the liquid is thus discharged the operator again turns the hand wheel 74 to the indicated position "Stop". This first lifts the arm 69 and applies the brake to the revolving flange 25 and after the speed of the rotating receptacle is sufficiently checked to lower the ring 94 out of the path of the finger 102 the lever 98 may be operated to unlock the flange 99 from the flange 100. This permits the cover 45 which has meanwhile been lifted out of engagement with the casing 6 to be swung out of registration with the receptacle so that the latter may be filled with rinsing water. The cover is then replaced and the hand wheel adjusted to the position "Wash" which causes the plunger to agitate the clothes. Adjustment is then made successively to the positions "Flood" and "Dry" to displace and centrifugally discharge the rinse water and this cycle may be repeated as often as desired to effect a complete rinsing.

Drying operation

After the final rinsing the machine is operated in the position "Dry" for a sufficient length of time to complete the extraction of liquid leaving the clothes in condition for immediate ironing. I have found that five or six minutes spinning is ordinarily sufficient to acomplish this purpose. The hand wheel is then adjusted to the position "Stop" which applies the brake to the rotating flange 25 and when momentum is checked permits of opening the cover and removing the dried contents of the receptacle.

An important feature of my invention is the slip clutch through which torque is communicated from the motor to the shaft 10. Without such device the inertia of the receptacle and its contents would be sufficient to greatly overload the motor. This would require either a special and expensive construction of motor or a greater power than necessary for the spinning of the reseptacle when the inertia is once overcome. With my improved construction, however, the torque is so limited as to avoid all danger of overloading. This may be accomplished by any suitable means but with the construction specifically shown the operation is as follows; The shoes 19 when at rest, are spaced from the surrounding flange 18a and the lubricating fluid within the housing 17 fills this space. When, however, the motor is rotating at full speed, centrifugal force will overcome the resistance of the springs 21 and press the shoes outward against said flange tending to form a locking engagement therewith. As this would overload the motor the effect actually produced is to slow the speed of rotation to a point where the springs to some extent balance centrifugal action and thereby limit the pressure of the shoes against the flange 18a. This in turn will reduce the torque so that a balance is established where the pressure of the shoes is just sufficient to transmit the maximum torque within the power of the motor. The load is thus gradually picked up and the driven shaft is gradually accelerated until its speed of rotation approximates that of the driver. This will permit a higher speed to the driver which will increase the centrifugal action upon the shoes 19 finally causing them to positively lock with the flange 18a and to revolve all parts at full speed.

It is obvious that with my improved construction of machine many operations necessary with other machines are eliminated, for instance, with machines having a separate wringer each separate article must be handled, first when placed in the washer, second when engaged with the wringer, third when hung out on the line for drying, fourth when removed from the line, etc. With certain machines heretofore used the clothes remained in the same receptacle during washing and while they were subjected to centrifugation, it was impossible to dry the clothes sufficiently for ironing, because of a lack of balance in the extractor. It is thus necessary to handle each article again when placed on the line and removed therefrom. With my machine, after the clothes have been first introduced into the receptacle no further handling is required until they are finally removed in a sufficiently dry condition for ironing.

As an incident to the self balancing feature of the rapidly revolving receptacle, such receptacle will rotate about an axis that is noncoincident with the geometrical axis of the machine and the outer casing thereof. Also as an incident to the rapid revolution of the receptacle, the revolving air within the outer casing, if unrestrained, will build up zones of pressure concentric to the geometrical axis and progressively higher ac-

cording to the radial distance from said axis. Such differential pressure interferes with the proper functioning of the automatic balancing mechanism for it is obvious that the pressure on the side of the receptacle farthest from the geometrical axis will be greater than that on the side nearer to the axis and this will tend to displace the receptacle from its proper position of balance. I therefore preferably provide means for equalizing this differential pressure which, as shown in Figures 12 and 13, is as follows: In the space within the outer casing 6 beneath the receptacle 7 I arrange a series of radial blades 106. As a result, instead of building up zones of pressure there is established an internal circulation, the air which is thrown out centrifugally returning through the static zone at the bottom of the casing and then again being thrown outward. By properly fashioning the plates 106 and inclining the same to the radius, any desired equalizing effect may be obtained and without obstructing the circulation of the air in such a manner as to interfere with the free rotation of the receptacle.

In addition to the function of equalizing the pressure in zones concentric with the axis but of different radius, the construction is one which prevents air loading. Such air loading would occur if the receptacle were to be revolved in the open as air would be drawn in adjacent to the axis and thrown off centrifugally. However, with the construction as shown, the cover 45 obstructs the passage of air axially into the receptacle from the top and the outer housing performs a like function at the bottom. This relieves the motor from unnecessary work and permits of revolving the container at a higher rate of speed.

What I claim as my invention is:

1. In a washing machine, the combination of a receptacle for holding both the articles to be washed and the washing fluid, a frame, a floating support on said frame upon which said receptacle is universally rockably supported, means for agitating the contents of said receptacle to effect the washing and alternatively operable means for communicating torque to said receptacle to revolve the same at a high rate of speed in substantial dynamic balance to centrifugally extract and discharge the fluid.

2. In a washing machine, the combination of a receptacle for containing both the articles to be washed and the washing fluid, a frame, a motor mounted on said frame, means driven by said motor for agitating the contents of said receptacle to effect the washing, a floating member on said frame upon which said receptacle is universally rockably supported, and means alternatively driven from said motor for imparting to said floating member a high rate of revolution whereby said receptacle and its contents will revolve in substantial dynamic balance to centrifugally extract and discharge the fluid.

3. In a washing machine the combination of a receptacle for holding both the articles to be washed and the washing fluid, a frame, a vertical shaft mounted on said frame for rotary and gyratory movement, a universally rockable support for said receptacle on the upper end of said shaft, a motor on said frame, means driven by said motor for agitating the contents of said receptacle to effect the washing and means alternatively driven by said motor for revolving said shaft at a high rate of speed whereby said receptacle and its contents will revolve in substantial dynamic balance to effect the centrifugal extraction and discharge of the fluid.

4. In a washing machine, the combination with a frame and a receptacle for holding the articles to be washed and the washing fluid, of means for agitating the contents of said receptacle to effect the washing and means for revolving said receptacle at a high rate of speed in substantial dynamic balance to effect the extraction of the fluid, said means comprising a motor on said frame, a vertical shaft universally coupled at its lower end to said motor a universal rockable support for said receptacle at the upper end of said shaft, a bearing for said shaft above its lower end and means non-symmetrically arranged around said shaft and bearing for resiliently and yieldably holding said shaft in upright position.

5. In a washing machine, a revoluble receptacle having a hollow post in the centre thereof, a vertical shaft extending upward into said hollow post, a spherical bearing in the upper end of said shaft engaging a spherical socket within said hollow post a rubber sleeve between said bearing and socket, and means forming a positive driving connection between said bearing and socket.

6. In a washing machine, the combination with a frame, of a receptacle for containing the articles to be washed and the washing fluid occupying a substantially fixed location upon said frame, means for agitating the contents of said receptacle to effect the washing, a floating revoluble member on said frame on which said receptacle is universally rockably supported and means for revolving said member at a high rate of speed to centrifugally extract and discharge the fluid.

7. In a washing machine, the combination with a frame, of a receptacle for containing the articles to be washed and the washing fluid, a floating revoluble member on which said receptacle is universally rockably supported, means contacting with said recep-

tacle for holding the same from rocking movement, means for agitating the contents of the receptacle and alternatively operable means for communicating a torque to said revoluble member and for freeing said receptacle from said contacting means whereby said receptacle may be revolved at a high rate of speed in substantial dynamic balance.

8. In a washing machine, the combination with a frame, of a receptacle for containing the articles to be washed and the washing fluid, means for closing said receptacle to retain the contents thereof, a plunger and means for reciprocating the same in said closed receptacle to agitate the contents and alternatively operable means for opening said receptacle and revolving the same at a high rate of speed to extract and centrifugally discharge the liquid.

9. In a washing machine, the combination with a frame, of a revoluble receptacle for containing the articles to be washed and the washing fluid, said receptacle having a central post, and a reciprocating hollow plunger surrounding said post for agitating the contents of said receptacle.

10. In a washing machine, the combination with a frame, of a receptacle having a central post a floating revolving support upon which said central post is rockably mounted, a hollow reciprocatory plunger surrounding and concentric with said post for agitating the contents of the receptacle and alternatively operable means for revolving the receptacle at a high rate of speed to extract and discharge the liquid content.

11. In a washing machine, the combination with a frame, of a revoluble receptacle for the articles to be washed and the washing fluid, said receptacle having a central post, a reciprocatory hollow plunger surrounding and concentric with said central post, a closure for said receptacle having an upward extension forming a chamber into which said plunger may be withdrawn from said receptacle, a motor on said frame, means driven by said motor for reciprocating said plunger, and means alternatively driven by said motor when said plunger is withdrawn for revolving said receptacle at a high rate of speed to extract and discharge the liquid content.

12. In a washing machine, the combination with a frame, of a receptacle for containing the articles to be washed and the washing fluid, a floating revoluble member mounted on said frame on which said receptacle is universally rockably mounted, means for closing said receptacle and for holding the same from rocking movement, a reciprocating plunger for agitating the contents of the receptacle, and alternatively operable means for communicating a torque to said revoluble member and simultaneously withdrawing said plunger and freeing said receptacle from said closing means whereby it may be revolved at a high rate of speed in substantial dynamic balance.

13. In a washing machine, the combination with a cylindrical receptacle for containing the articles to be washed and the washing fluid, of means for closing said receptacle to retain the contents thereof, means for agitating the contents of said receptacle while the latter is closed and alternatively operable means for opening said receptacle and for revolving the same at a high rate of speed to discharge the fluid over the top of the cylinder wall.

14. In a washing machine, the combination with a cylindrical receptacle, means for closing said receptacle, means for agitating the contents of said receptacle while closed, means operable when said receptacle is open for revolving the same at a high rate of speed to discharge the liquid content over the cylinder walls, and an outer casing for receiving and draining away the discharged liquid.

15. In a washing machine, the combination with a receptacle for receiving the articles to be washed and the washing fluid having a cylindrical imperforate wall, of a perforated lining within said receptacle slightly spaced from said imperforate wall, a closure for said receptacle, means for agitating the contents of said receptacle while closed to effect the washing, and means operable when said receptacle is uncovered for revolving the same at a high rate of speed to centrifugally extract the liquid and discharge the same between said perforated lining and imperforate wall over the top of the latter.

16. In a washing machine, the combination with a cylindrical receptacle for receiving the articles to be washed and the washing fluid, of a housing surrounding said receptacle and provided with a drain connection, a revoluble floating member on which said receptacle is universally rockably supported, a cover for engaging said cylindrical receptacle to close the same, a plunger located in a recess in said cover, means for reciprocating said plunger to agitate the contents of the receptacle, means operable when said cover is removed for revolving the same at a high rate of speed to centrifugally discharge the liquid over the top of the receptacle and into said housing.

17. In a washing machine the combination with a receptacle for the articles to be washed and the washing fluid, means for agitating the contents of said receptacle to effect the washing, means for revolving the receptacle at a high rate of speed to effect centrifugal drying, a manually controlled mechanism for selecting said alternative operations, and means for limiting the operation

of said control mechanism to prevent adjusting of said recpetacle to the agitating position while said receptacle is revolving at high speed.

18. In a washing machine, the combination with a receptacle for containing the articles to be washed and the washing fluid, of a closure for said receptacle, means for adjusting said closure alternatively to open or closed position, means for agitating the contents of said receptacle while closed, means for revolving said receptacle at a high rate of speed to effect centrifugal extraction, a manually operable control mechanism for the several adjustments, and means for limiting the operation of said control mechanism to prevent opening of said receptacle or adjusting to the agitating position while said receptacle is revolving at a high rate of speed.

19. In a washing machine, the combination with a frame, of a motor mounted thereon having a vertically arranged rotor shaft, a revoluble receptacle in alignment with said shaft and supported thereon, a reciprocatory plunger above said receptacle also in alignment therewith, a high speed transmission between said rotor shaft and receptacle, a low speed transmission between said rotor shaft and reciprocatory plunger and means for alternatively coupling said high speed and low speed transmissions.

20. The combination with a revoluble receptacle, of means for supporting and revolving said receptacle permitting the same to rotate about the centre of mass when noncoincident with the geometrical centre, a peripherally closed surrounding housing concentric with the geometric axis of said receptacle, and means for relieving the centrifugally developed air pressure in said outer housing to avoid interference with the rotation of said receptacle about its centre of mass.

21. In a washing machine, a receptacle for receiving the articles to be washed and the washing fluid provided with a cylindrical imperforate wall, a perforated lining within said receptacle slightly spaced from said imperforate wall and having at its upper end an inturned flange, a cover for the top of said receptacle forming a sealing contact with the upper edge of said imperforate wall, means for agitating the contents of said receptacle when the cover is closed, and means operable when the cover is unsealed for rotating said receptacle at high speed whereby the articles will be retained by said perforated lining and inwardly extending flange and the liquid will be extracted and discharged between the perforated and imperforate wall and over the top of the latter.

22. In a washing machine, a receptacle for receiving the articles to be washed and the washing fluid provided with a cylindrical imperforate wall, a perforated lining within said receptacle slightly spaced from said imperforate wall and having an inwardly extending flange at its upper end, a cover for said receptacle having sealing contact with the upper edge of said imperforate wall, a plunger engaging a recess in said cover and adapted for reciprocation in said receptacle to agitate the contents thereof, means for raising said cover to detach the same from said receptacle means for rotating said receptacle at a high rate of speed to extract the liquid and to discharge the same between said perforated and imperforate walls over the top of the latter, and an outer casing for receiving the liquid so discharged and conducting the same to the drain.

23. In a washing machine, the combination with a pedestal, of an enlarged housing at the upper end of said pedestal, a receptacle for receiving the articles to be washed and the washing fluid located within said housing, means for revolving said receptacle permitting the same to rotate about the centre of gravity and in substantial dynamic balance, a cover for engaging said receptacle and sealing the upper edge thereof, a plunger located in a recess in said cover, an arm for supporting the said plunger, a rod vertically reciprocating outside said housing to which said arm is attached, a lever for actuating said rod, a motor within said pedestal, a low speed transmission mechanism for said motor and said lever for actuating the same, a high speed connection between said motor and said revoluble receptacle, means for alternatively coupling said low speed and high speed connections.

24. In a washing machine, the combination with a housing, a revoluble receptacle for holding the articles to be washed and the washing fluid, means within said housing, a cover for said receptacle, and a reciprocatory plunger located in a recess in said cover, means for actuating said plunger including a motor and a low speed driving connection therefrom, a high speed driving connection between said motor and revoluble receptacle, a manually operable control for alternatively coupling said low speed and high speed connections, means operable while said receptacle is revolving at high speed for locking said cover from disengagement and for preventing the engagement of said low speed coupling.

25. A washing machine comprising a pedestal, an enlarged housing supported thereupon, a cylindrical receptacle for receiving the articles to be washed and the washing fluid within said housing, a revoluble oscillatory shaft within said pedestal and housing to the upper end of which said receptacle is universally rockably connected,

a motor in fixed position within said pedestal, a universally rockable coupling connection between said motor and shaft, a resiliently yieldable supporting bearing for said shaft having a centre of oscillation coinciding with the centre of the rocking coupling between said shaft and motor, a reciprocatory plunger for agitating the contents of said receptacle, mechanism driven by said motor for imparting a reciprocating movement to said plunger, and clutches in the driving connections between said motor and receptacle and between the motor and plunger respectively operable to alternatively impart movement to the plunger when the receptacle is stationary and rotation of the receptacle when the plunger is withdrawn.

26. In a washing machine, a receptacle for the articles to be washed and the washing fluid having an imperforate cylindrical wall and an upwardly projecting central hollow post, a perforated lining for said receptacle spaced from said imperforate wall, a revoluble floating support extending into said hollow post and on which said receptacle is universally rockably supported, a cover for engaging the upper end of said imperforate cylindrical wall to close said receptacle, a reciprocatory plunger located in a recess in said cover coaxially with said receptacle and hollow to surround said post, means for reciprocating said plunger to agitate the contents of said receptacle, and means operating when said plunger is withdrawn and said cover disengaged from said receptacle for rotating the latter at a high rate of speed to centrifugally discharge the liquid content between said perforated and imperforate walls and over the top of the latter.

27. In a washing machine, the combination with a revolving container and a closed housing surrounding the same, of means for preventing the air loading of said container while revolving at high speed.

28. In a washing machine, the combination with a revoluble container and a peripherally closed surrounding housing therefor, of means for equalizing the air pressure in zones concentric with the axis and of different radius.

29. In a washing machine, the combination with a revoluble receptacle and a peripherally closed housing surrounding the same, of means for retarding the rotation of air in a radial plane within said housing to permit the equalization of pressures between zones of different radius.

30. In a washing machine, the combination with a revoluble receptacle and a peripherally closed housing for surrounding the same of a series of radially extending vanes within said housing for retarding the rotation of the air thereto and thereby permitting equalization of pressures in zones of different radius from the axis.

31. In a washing machine, the combination with a container for articles during both washing and drying operations, of a motor, and means driven by said motor for agitating the contents of said container, means alternatively driven by said motor for revolving said container at a high rate of speed and automatic control means for preventing the shift from said revolving means to said agitating means while the receptacle is rotating at high speed.

In testimony whereof I affix my signature.

WILLIAM E. BOCK.