Sept. 19, 1933. L. H. MORIN 1,927,413

DIALING DEVICE

Filed Nov. 10, 1932 5 Sheets-Sheet 1

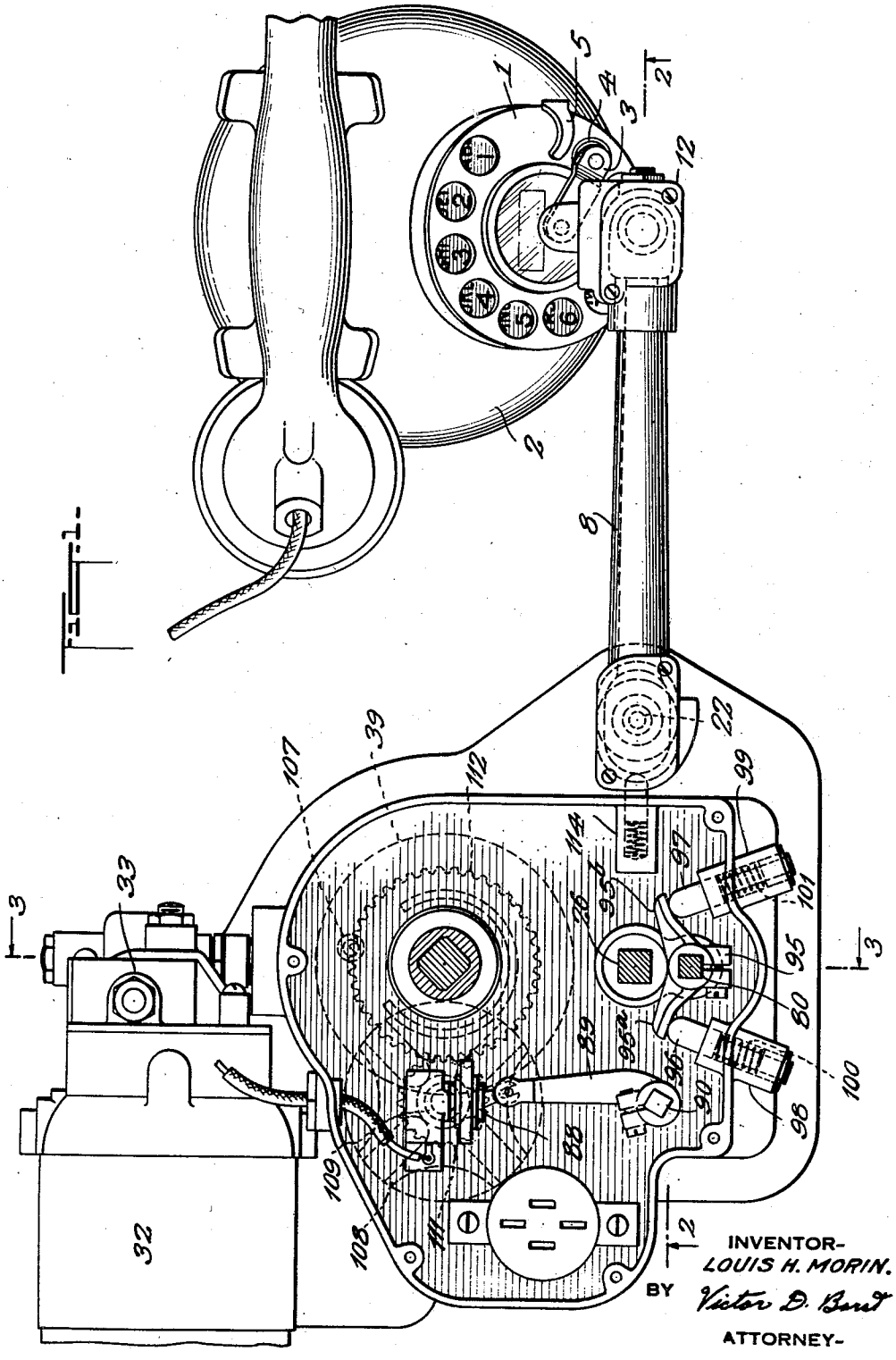

INVENTOR-
LOUIS H. MORIN.
BY Victor D. Bent
ATTORNEY-

Sept. 19, 1933. L. H. MORIN 1,927,413

DIALING DEVICE

Filed Nov. 10, 1932 5 Sheets-Sheet 2

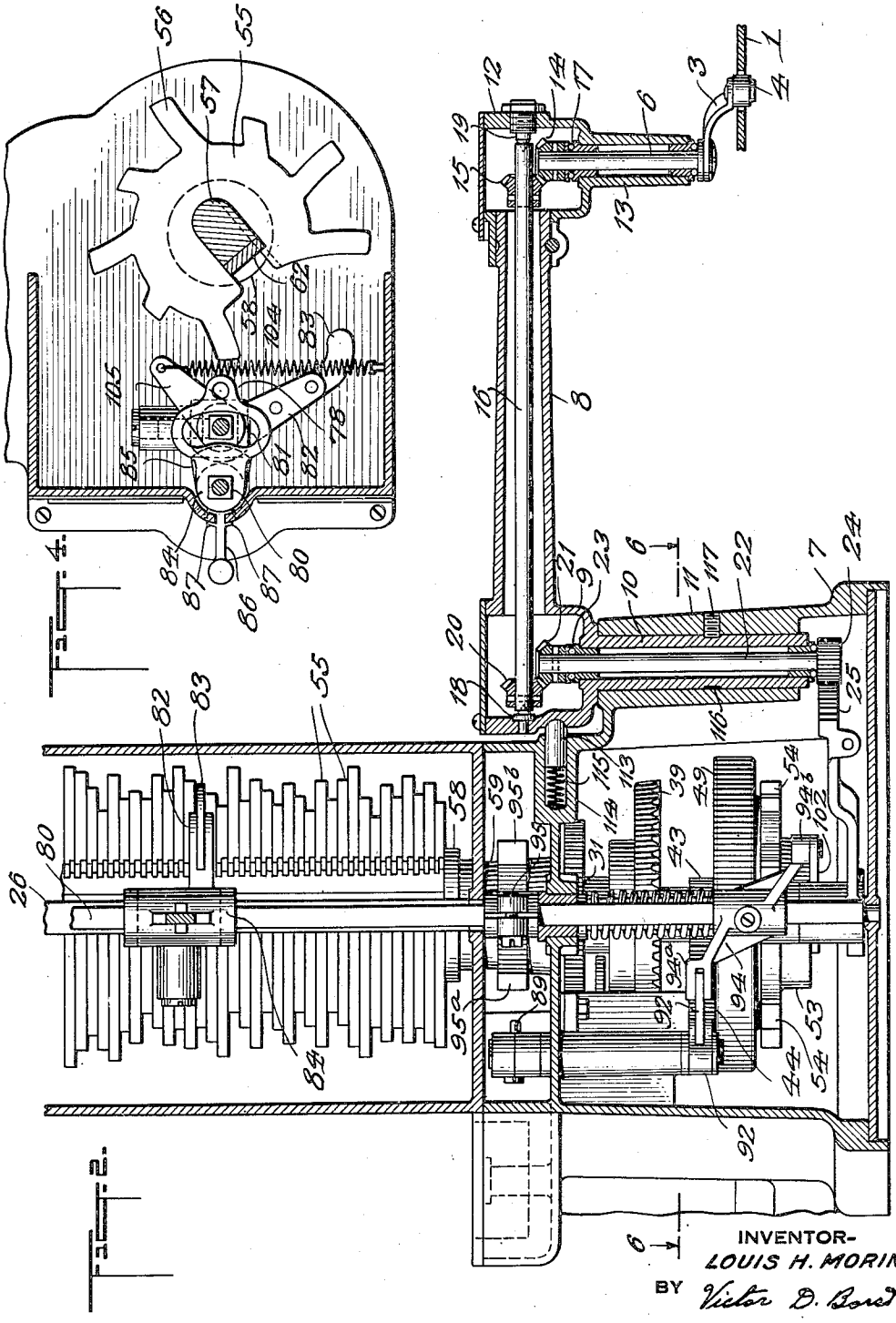

Fig. 4.

Fig. 2.

INVENTOR-
LOUIS H. MORIN.
BY Victor D. Borst
ATTORNEY-

Sept. 19, 1933. L. H. MORIN 1,927,413

DIALING DEVICE

Filed Nov. 10, 1932 5 Sheets-Sheet 3

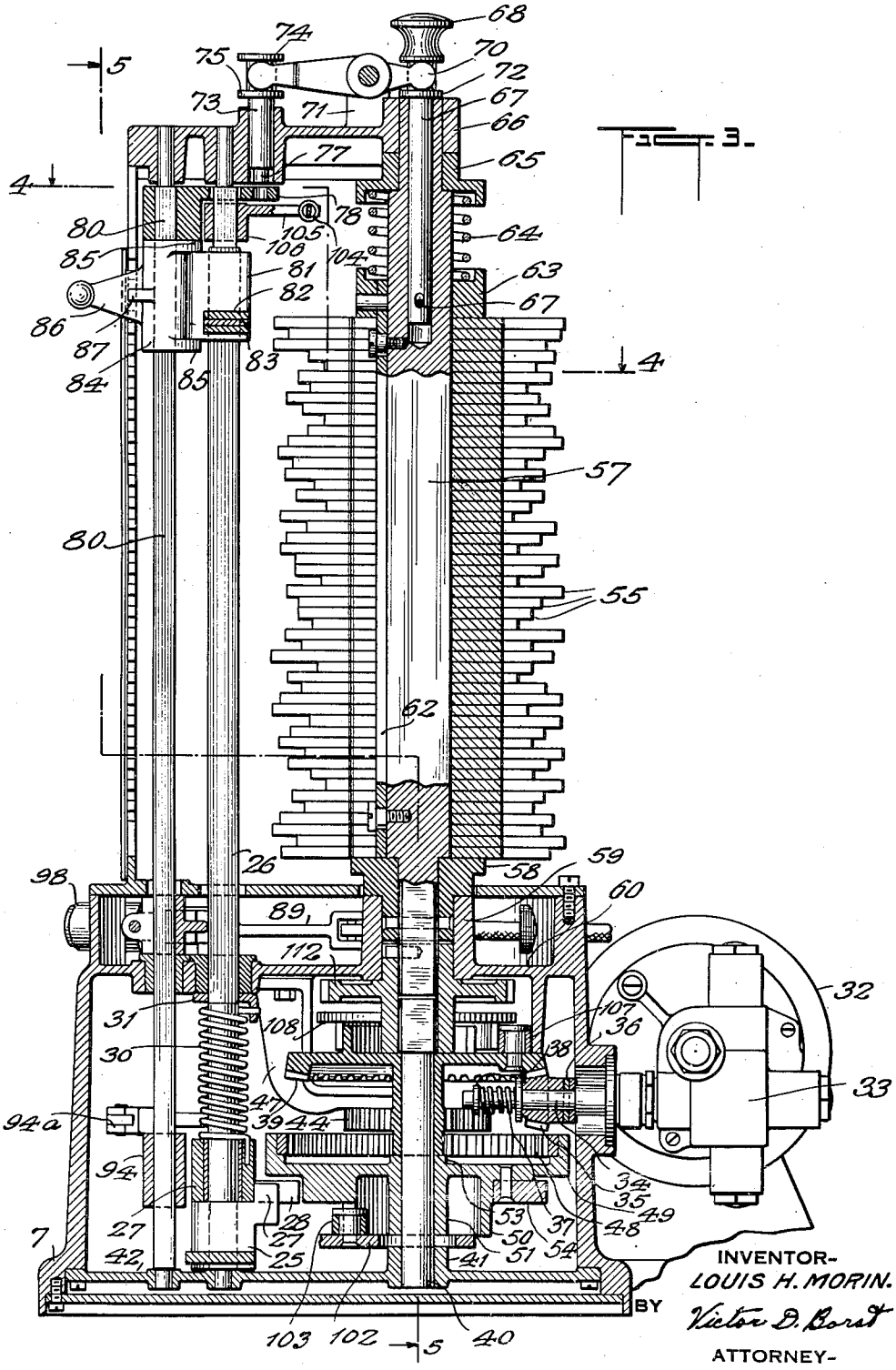

INVENTOR-
LOUIS H. MORIN.
BY Victor B. Borst
ATTORNEY-

Sept. 19, 1933. L. H. MORIN 1,927,413

DIALING DEVICE

Filed Nov. 10, 1932 5 Sheets-Sheet 4

FIG. 5.

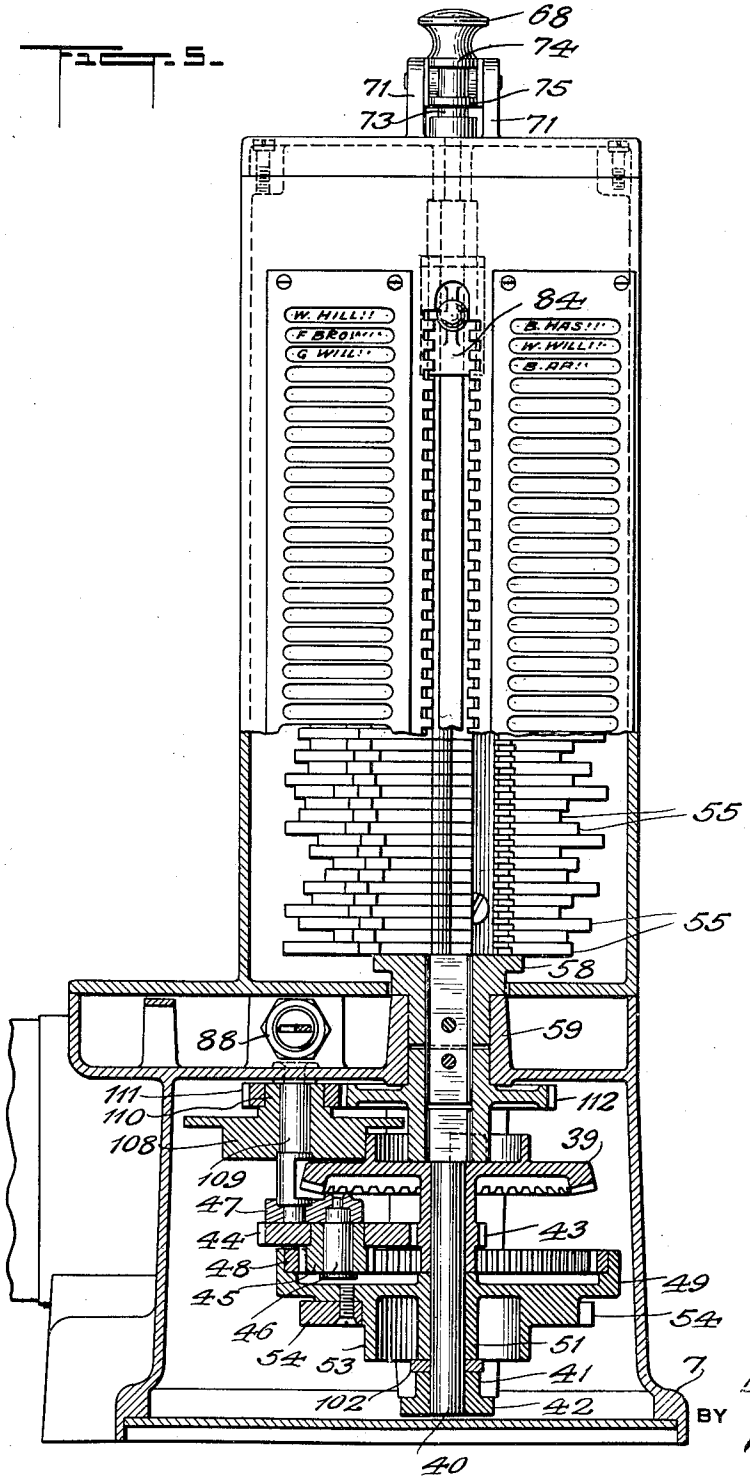

INVENTOR-
LOUIS H. MORIN.

BY Victor D. Borst

ATTORNEY-

Sept. 19, 1933. L. H. MORIN 1,927,413

DIALING DEVICE

Filed Nov. 10, 1932 5 Sheets-Sheet 5

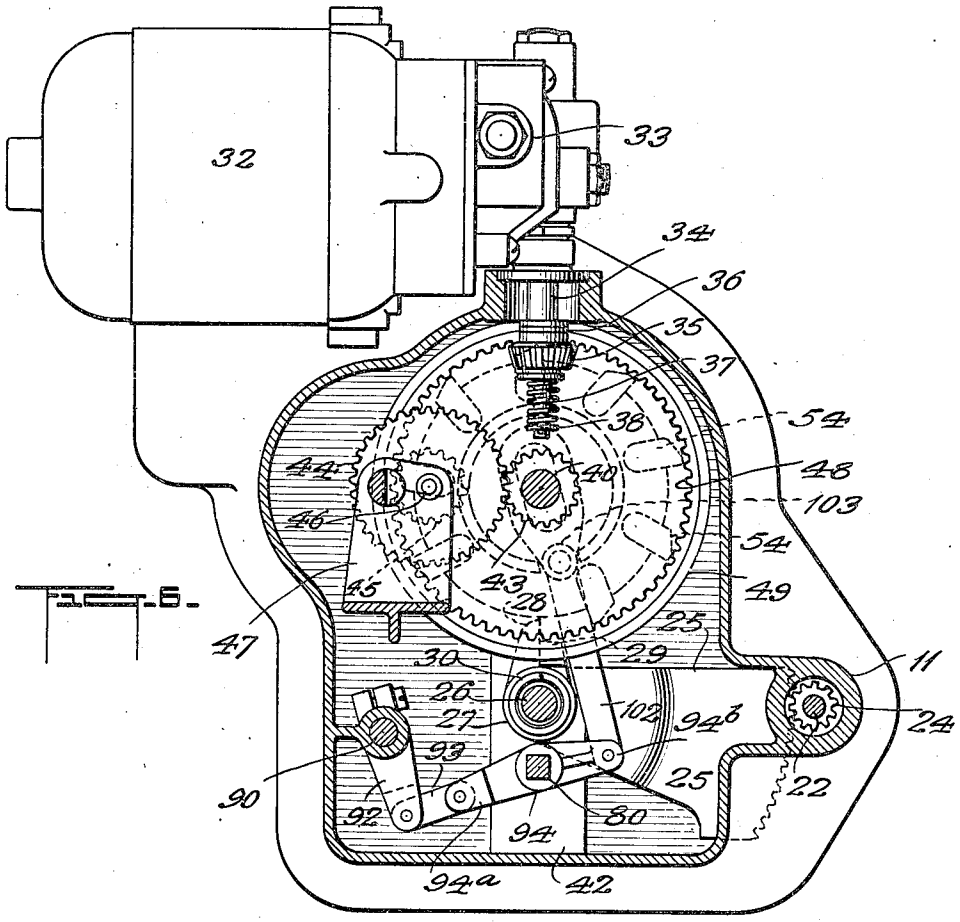

FIG. 6.

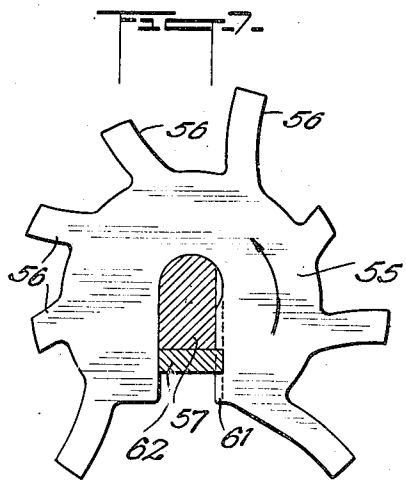

FIG. 7.

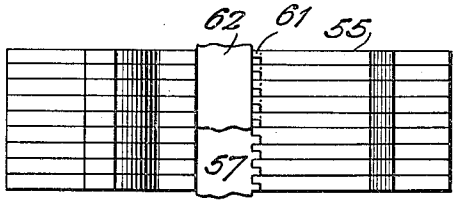

FIG. 9.

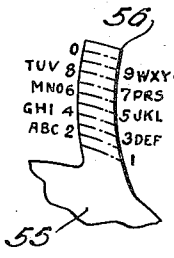

FIG. 8.

INVENTOR-
LOUIS H. MORIN.
BY Victor D. Borst
ATTORNEY-

Patented Sept. 19, 1933 1,927,413

UNITED STATES PATENT OFFICE

1,927,413

DIALING DEVICE

Louis H. Morin, New York, N. Y.

Application November 10, 1932
Serial No. 642,007

19 Claims. (Cl. 179—90)

My invention relates to an automatic dialing device for selectively actuating the dial of an automatic telephone to progressively dial the items of telephone call numbers. In particular, the invention comprehends a dialing device which is selectively adjustable to dial a plurality of different call numbers.

In automatic telephone systems, the call number selecting mechanism is actuated in accordance with electrical impulses set up by control mechanism. Commonly, the control mechanism for this purpose consists of a dial which is mounted upon the telephone or switchboard with which it is associated. Such dials include a base in which the mechanism for setting up the actuating impulses for the selecting mechanism is located. On an annular section formed in the upper surface of the base, the items of call numbers are printed in ten groups each group including several letters and a number. Rotatably mounted on the base and above the annular section on which the call-number items are printed, there is a disk which extends over the annular section of the base and which has ten holes therein, one for each group of items, through which holes the items may be observed. The disk is operatively connected to the impulse mechanism and rotation of the disk through different angular distances sets up a different number of impulses, corresponding to the letters or characters of the several groups. To dial an item of a call number, the operator inserts his finger or some implement into the opening in the dial above the group of characters which includes the particular item he wishes to dial and rotates the dial until the finger or implement abuts against a stop member. He then releases the dial. Upon being released, the dial is returned to its initial position by a spring and on the return movement actuates the mechanism which sets up the actuating impulses. This operation must be repeated for each item in the call number. Commonly, and particularly in large communities where there are several telephone stations, telephone call numbers aggregate seven items, the first three representing a station, and the last four a line in that station. To dial such a number, the dial must be actuated seven times, once for each item in the call number.

In commercial offices, there is generally a switchboard having several trunk lines and numerous extension lines. This switchboard is operated by an operator who takes care of all calls including incoming calls, outgoing calls and internal calls, that is, calls between extensions. For all outgoing calls, the operator must dial the desired call number on the dial mechanism located on the switchboard. Even though the operator has the face of the dial memorized, much time is consumed when the dial has to be actuated seven times for each desired number, and while the operator is actuating the dial, his entire attention must be concentrated upon the dialing. Consequently, the operator can not, while dialing a call number, take care of incoming calls or internal calls so that service on the additional trunks and extensions can not be had while the dial is being operated. This condition materially slows up the service which an operator can render.

With the device of my invention, an operator is enabled to handle many more calls during any particular time interval as the tedious successive operation of the dial is eliminated. Also while the dial is being actuated by the dialing device of my invention, the operator may answer incoming calls or make connections for internal calls, for by the dialing device of my invention an operator is enabled to dial any one of a plurality of telephone call numbers by a single manual operation. This is accomplished in the dialing device of my invention by selectively setting a control element which sets the device and actuates the starting mechanism controlling the operation of the dialing device. After the dialing device is started, it will complete the dialing operation without any further attention, for it is provided with a motor which continues tc operate until the several items of the call number have been dialed. The power supplied by the motor is transmitted through motion transmitting mechanism to dial actuating mechanism which is directly connected to the dial and which is adapted to rotate the dial through its maximum angular movement. Intermediate the motor and the connection to the dial, the unidirectional movement of the motor is converted into intermittent movement of the dial actuating mechanism. Successive movements of the dial actuating mechanism are controlled by a translating element which converts the movements imparted by the motor into selective movements of the actuating mechanism to progressively dial the items of a telephone call number. A plurality of such elements, one for each of the telephone call numbers which are frequently called, are mounted in operative relation to a single control element. The control element is adapted to cooperate with the translating elements, one at a time, in determining the movement imparted to

the dial actuating mechanism, and is shiftable with respect to the translating elements to selectively utilize the several translating elements.

An advantage of my invention is the fact that the dialing device is readily disconnected from the telephone dial with which it is associated so that the dial may be manually actuated if desired.

Another advantage of my invention is the fact that the operator need not know the items of any of the call numbers which are set up on the dialing device, thus enabling the operator to give his entire attention to other calls while a particular line is being secured by the dialing device.

Specifically, a device embodying my invention includes a dial actuating means, a power device, a transmission for transmitting movement from the power device to the dial actuating means and translating elements for translating movement of the power device into successive, selective actuations of the dial actuating means to progressively dial the items of any particular call number. The portion of the dial actuating means immediately associated with the dial consists of a finger or lever having a roller secured thereon that extends into the last opening on the dial, that is, the opening adjacent the rear of the finger stop. This finger or lever is connected to a shaft which through a train of gears is connected to a rotatably mounted control shaft. On this control shaft there is a sleeve loosely mounted and the sleeve is connected to the shaft for imparting rotational movement thereto through a flexible connection. The power device may well be an electric motor which is connected through reduced gearing to a sprocket. The sprocket cooperates with a lug formed on the sleeve, which is loosely mounted on and flexibly connected to the control shaft, to intermittently acuate this sleeve through a definite predetermined angle. The intermittent movement of the sleeve is transmitted through the flexible connection to the control shaft and from the control shaft to the dial actuating finger.

The control shaft has a bracket slidably mounted thereon which bracket has an abutment finger adapted to cooperate with translating elements stacked on a shaft parallel to the control shaft. Each translating element has a plurality of abutment surfaces thereon adapted to cooperate with the abutment finger to limit movement of the control shaft. The translating elements are made of disks and the abutment surfaces extend radially thereof. Each disk or translating element represents a particular call number and each abutment surface on the disk represents a particular item of the call number, the radial distance of the abutment surface from the center of the disk determining the angular distance through which the control shaft is rotated and thus the item which will be dialed by the dial actuating mechanism when the particular abutment surface is positioned to cooperate with the abutment finger on the control shaft. The abutment finger on the control shaft may be slid along the control shaft into operative position with respect to any one of the several stacked translating elements.

The shaft on which the translating elements are stacked is rotatably mounted on the dialing device and is rotated through a Geneva movement upon each actuation of the dial so as to bring the several abutment surfaces thereon successively in to operative position with respect to the abutment finger on the control shaft. If the telephone numbers of the community in which the dialing device is used have seven items, then each element will have seven abutment surfaces, one for each item in the call number, and the Geneva movement will rotate the shaft on which the translating elements are mounted one-seventh of a revolution each time the dial is actuated.

The control device, besides determining which of the translating elements will be utilized, is also used to start the motor. When the motor is started, it is automatically held in operation until the telephone call number is completely dialed at which time it is automatically disconnected from the line. Translating elements may be readily substituted in the event of changed call numbers and while these are being substituted the control mechanism is automatically locked so that the dialing device can not be operated.

Along the face of the casing surrounding the dialing device there may be spaces for the names of the people whose telephone numbers are represented by the translating elements within the dialing device. In this way, if it is desired to call a particular person, the control member may be slid along the control shaft opposite that particular person's name and when it is swung either to the right or to the left, the dialing device starts operating to dial the telephone call number of the telephone belonging to the person opposite whose name the control element is positioned.

A clearer understanding of my invention may be had from the following particular description of one embodiment thereof which is shown in the accompanying drawings in which:

Fig. 1 is a plan of the dialing device in operative position with respect to a telephone dial, part of the dialing device being shown in section;

Fig. 2 is a partial front, sectional elevation taken on the irregular line 2—2 of Fig. 1;

Fig. 3 is a side, sectional elevation taken on the line 3—3 of Fig. 1;

Fig. 4 is a sectional plan taken on the irregular line 4—4 of Fig. 3;

Fig. 5 is a front, sectional elevation taken on the irregular line 5—5 of Fig. 3;

Fig. 6 is a sectional plan taken on the line 6—6 of Fig. 2;

Fig. 7 is a plan of a translating element;

Fig. 8 is an enlarged fragmentary detail of a translating element; and

Fig. 9 is an enlarged fragmentary elevation of a plurality of translating elements mounted upon a shaft.

In the drawings, the dialing device is illustrated as connected up to the dial 1 of an individual telephone 2. It may be utilized with such a dial, or it may be utilized and has particular advantages, when used in connection with the dial on a switchboard. The dialing device illustrated essentially consists of a dial actuating means, operating means for the dial actuating means, a transmission for modifying and transmitting motion of the operating means to the dial actuating means, and control mechanism for controlling the movements of the dial actuating means. The portion of the dial actuating mechanism immediately associated with the dial consists of an offset finger or lever 3 which has secured thereto at one end thereof a roller 4 mounted upon a pin depending therefrom. The roller is adapted to extend into the last opening in the dial, that is, the opening adjacent the rear of the finger stop 5. The other end of the

lever 3 is secured to the end of a shaft 6 which is rotatably mounted in an extension of the base 7 of the casing of the dialing mechanism. This extension of the dialing mechanism casing includes a hollow arm 8 extending radially of the casing and having a gear housing at each end, the gear housing 9 at the inner end having a hollow extension 10 extending downwardly therefrom and at right angles thereto into a hub 11 in the casing. The extension 10 is rotatably mounted in the hub 11 to permit a swinging movement of the arm 8. The gear housing 12 on the outer end of the arm 8 has a hollow extension 13 depending therefrom parallel to the extension 10. In this latter extension the shaft 6 is rotatably mounted. In the gear housing 12 on the outer end of the arm 8, there is a pair of beveled gears meshing with each other, one 14 secured to the end of the shaft 6 which extends into the housing and the other 15 secured adjacent the end of a shaft 16 which extends through the arm 8 of the casing. The hub of the gear 14 abuts against a thrust bearing 17 and supports the shaft 6 in a vertical position. The shaft 16 is mounted on two centers 18 and 19 which extend through side walls of the inner and outer gear housings respectively. In the inner housing there is also a pair of bevel gears meshing with each other, one 20 secured to the shaft 16 and another 21 secured to the end of a vertical shaft 22 extending through and journaled in the extension 10 of the arm 8. This shaft is also supported through a thrust bearing 23 abutting against the end of the hub of the gear 21. On the lower end of the shaft 22 which extends into the casing of the dialing mechanism proper, there is mounted a pinion 24 which meshes with a segmental gear 25 secured on the end of a square, vertical shaft 26. Rotatably mounted on a section of this shaft immediately above the segmental gear, there is a sleeve 27 which has a radial lug 28, extending therefrom. The hub of the segmental gear has an upstanding lug 29 extending therefrom which acts as a stop member against which the lug 28 abuts. The sleeve 27 is connected through a spring 30 to the shaft 26, the spring being connected at one end to the sleeve and at the other end to a flange depending from a collar 31 secured to the shaft. This spring connection constitutes a flexible connection between the sleeve 27 and the shaft 26.

The shaft 26, which is the control shaft of the dial actuating mechanism, is intermittently operated by an electric motor 32. The electric motor is connected through a train of reducing gears 33 to a shaft 34 which extends into the casing enclosing the dialing device mechanism. On this shaft, there is mounted a beveled pinion 35, the pinion being frictionally secured to the shaft to rotate therewith through a thrust collar 36 which abuts against the hub of the gear. The gear is pressed against this thrust collar by a spring 37 acting between the opposite end of the gear hub, and another collar 38 secured to the shaft. The bevel pinion gear 35 meshes with a ring gear 39 rotatably mounted on a short vertical shaft 40 which is secured in a hub 41 formed in a bracket 42 extending parallel to the base of the casing. The ring gear has an elongated hub on which there is formed a pinion 43 that meshes with a spur gear 44 rotatably mounted upon the reduced extension of the hub of another pinion 45 which is mounted upon a vertical stub shaft 46 secured in a bracket 47. The spur gear 44 is secured on the hub of the pinion 45 to rotate therewith and the pinion meshes with an annular gear 48 secured to a bracket 49 rotatably mounted on the shaft 40. This bracket 49 has a raised central hub 50 which abuts against the end of the hub of the ring gear, and a depending hub 51 which abuts against the end of the hub 47 on the shaft 40. Surrounding this depending hub there is a cam 53, the purpose of which will hereinafter be described.

Short lugs 54 are secured to the bottom of the bracket 49 and extend radially thereof. There are eight of these lugs, each secured to the bracket by means of a machine screw and the lugs with the bracket form a sprocket. The lugs 54 are in the same plane as the lug 28 extending from the sleeve 27 and are adapted upon rotation of the bracket to engage the lug on the sleeve 27 and rotate the sleeve through a definite angular distance, approximately one-eighth of a revolution. This motion is transmitted through the spring 30 to the control shaft 26 and from the control shaft to the segmental gear 25 and through the gearing heretofore described to the finger 3 which actuates the dial. The one-eighth revolution of the control shaft is, by virtue of the proportioning of the gears in the gear train, sufficient to move the dial lever 3 an amount equivalent to setting up the largest number of impulses permissible with the dial.

The amount that the control shaft is rotated by the actuation of the sleeve 27 is, however, controlled by translating elements 55. These translating elements are in the form of disks having substantially radial projections 56, one for each item of the telephone call numbers in the community in which the dialing device is utilized. The outer ends of these radial projections constitute abutment surfaces for limiting the amount of movement of the control shaft. The projections are divided up into segments corresponding to the characters on the face of the dial and each segment is cut to a length corresponding to a particular item. Thus, in the translating element illustrated in Fig. 7, starting from the left of the opening in the disk, the first seven radial projections represent the following items: B, C, 6, 4, 1, 8 and 3, the last projection being such as to prevent any movement of the dial. This particular translating element is provided with eight projections for call numbers having eight items but it may be used as shown for a call number having only seven items. The manner in which the projections are divided up to represent the different characters of the telephone dial is illustrated in Fig. 8.

In the dialing device there is one of these translating devices for each telephone number it is desired to call. Normally, a commercial office has approximately fifty telephone numbers which are regularly called and therefore there would be approximately fifty of these translating elements in the dialing device. The entire fifty of the disks, or more if desired, are mounted upon a vertical shaft 57 which is secured in a bushing 58 journaled in a hub 59 extending from a transverse partition wall or bracket 60 in the casing. The shaft is elongated in cross-section as shown in Fig. 7, and is provided with a plurality of slots along one longitudinal side thereof. The translating elements each have elongated slots therein between the first and last projections thereon and have a projection 61 along one edge of the slot which extends into one of the slots formed on the shaft. Construct-

ed in this way the translating elements may be inserted and removed transversely of the shaft so that it is not necessary to remove all of the translating elements in order to change one or more, but each may be removed independently. To lock the translating elements on the shaft there is provided a bar 62 which fits along the side of the shaft and engages the extension 61 on the translating elements.

The several translating elements are mounted one upon the other on the shaft, and at the top of the shaft there is a collar 63 which rests upon the uppermost translating element. This collar is pressed against the translating element by means of a spring 64 which acts between the collar 63 and another collar 65 which presses against the end of a bearing hub 66 on the top of the casing in which a reduced end of the shaft 57 is rotatably mounted. The upper end of the shaft is hollow and receives a rod 67 having a knob 68 on the upper end thereof. This rod has a pin 69 extending therethrough which extends through slots in the shaft 57 and engages the collar 63. Upon raising the rod, the collar 63 is raised off of the translating elements and the translating elements are relieved of the pressure of the spring 64 and may be, upon loosening the bar 62, readily removed and replaced. A bifurcated lever 70 pivotally mounted on a bracket 71 on the top of the casing extends between the knob and a collar 72 on the rod 67 so that as the rod is moved up or down the lever is actuated about its pivotal mounting. The other end of this lever 70 is also bifurcated and the bifurcated end extends on opposite sides of a vertical rod 73 between a flange 74 on the end of a rod and a collar 75 so that this rod is moved downwardly when the rod 72 is moved upwardly. The rod 73 is slidably mounted in a hub 76 and has a reduced end portion 77 which extends into an opening in a lever 78 when the rod 73 is moved downwardly. This lever extends from a hub 79 secured on to a squared shaft 80 mounted parallel to the control shaft 26 and having rounded ends mounted in hubs in the top of the casing and the partition or bracket 42 adjacent the bottom of the casing.

Slidably mounted upon the control shaft 26, there is a bracket 81 which has a bifurcated arm 82 extending at substantially a right angle therefrom. Between this bifurcated arm there is secured an abutment finger 83 which cooperates with the abutment surfaces on the translating elements, the finger being of the same thickness as a translating element. The bracket 81 is slidably mounted on the control shaft and may be manually shifted along the control shaft to bring the abutment finger opposite any one of the translating elements, and for the purpose of shifting the bracket, there is a bracket 84 slidably mounted on the squared shaft 80. The bracket 84 has two parallel, vertically spaced arms 85 embracing and pivotally secured to the bracket 81. Extending from the bracket 84 in a direction opposite to the arms 85, there is a lever 86 for manually shifting the brackets 84 and 81 along the shafts 80 and 26 respectively.

The lever 86 extends through a longitudinal slot in the front face of the dialing device the sides of which slot have a series of notches on either side thereof and the lever has, extending from either side, lugs 87 which are receivable in these notches. Each slot corresponds to a translating element, the notches on either side of the slot being staggered to provide a greater distance between slots. On the front face, on opposite sides of the longitudinal slot, there are sheaths adapted to receive cards opposite the notches and having the names of people it is desired to call and whose telephone numbers correspond to the translating element represented by the particular notch. To secure a particular number, the lever 86 is moved vertically to a position opposite the name of the person it is desired to call. The lever is then swung sidewardly so that a lug 87 extends into the notch adjacent the particular name. As the lever is moved sidewardly the shaft 80 is rotated and transmits motion to a switch operating mechanism which operates a switch 88 that connects the motor to the line.

The switch for connecting the motor to the line is a toggle switch and the toggle lever thereof is secured to the upper end of a lever 89 mounted on a short, square vertical stub shaft 90 mounted in and extending beyond both sides of the partition 60. On the lower end of this stub shaft, below the partition 60, another lever 92 is secured to the shaft and is connected by means of a link 93 to the end of a lever 94 secured on the shaft 80. This latter lever 94 has two oppositely extending vertically spaced arms 94*a* and 94*b* one of which, the upper arm 94*a*, is secured to the aforementioned link 93. Immediately above the partition wall 60 on the base of the casing, in which wall the shaft 90 is journaled, there is secured to the shaft a bracket 95 having two levers 95*a* and 95*b* extending substantially radially thereof. Each of these levers has an abutment face on which a plunger 96 and 97 respectively acts. The plungers are mounted in bushings 98 and 99 and are resiliently urged towards the levers by convolute springs 100 and 101. When the shaft 80 is rotated by sideward movement of the control lever 86, one or the other of these plungers, depending upon the direction of movement of the lever, is moved against the spring which tends to return the shaft to its original position in which the switch 88 is off. In order to maintain the shaft in the rotated position and the switch actuated, there is a link 102 secured at one end to the lower arm 94*b* of the lever 94. The link is widened out at its opposite end and has a slot through which the shaft 40 passes, the link resting upon the bushing 41 beneath the cam 53. On the link, adjacent the cam 53, there is mounted a cam follower 103. The cam 53 has a cut-out section which is positioned substantially longitudinally of the lever when the dialing device is in the inoperative position and in such position, the cam follower 103 is in the cut-out section of the cam as shown in Fig. 6. If the control lever is swung in one direction the shaft 80 is rotated so that the cam follower moves into the cam and as the motor rotates the follower engages the inner surface of the cam. The switch is therefore held in the "on" position against the action of the plunger 96 while the cam makes one complete revolution. If, on the other hand, the control shaft is rotated in the opposite direction, the motor starts and the cam follower engages the outer surface of the cam and the switch is held in the "on" position against the action of the plunger 97 during one rotation of the cam; the neutral position of the cam follower being between the inner and outer surfaces of the cam.

As the motor operates, the control shaft 26 is intermittently actuated through the motion transmitting train heretofore described. As the control shaft is rotated, the abutment finger 83 con-

tacts with the first projection on the translating element lying in the plane containing the finger. The angular movement of the control shaft is thus limited by this projection to a definite predetermined movement which movement is transmitted to the dial to actuate the dial to set up a particular item. As the dial returns to its normal position, the control shaft is also positively returned to its initial position by a spring 104 which is secured at one end to an arm 105 extending from a hub 106 secured on the control shaft. Upon each actuation of the dial, the shaft 57 carrying the translating elements is rotated one-eighth of a revolution to bring the next successive projection into abutting relation to the finger 83. This rotation of the translating element shaft is accomplished through a Geneva movement which includes a roller 107 mounted on the upper side of the ring gear 39 and a star wheel 108 having openings to receive the roller 107. The star wheel is rotatably mounted on a short shaft 109 parallel to the shaft 40 on which the ring gear 39 is mounted. The star wheel has an extended hub 110 on which a pinion 111 is mounted. The pinion 111 meshes with a gear 112 secured to the translating element shaft 57. The star wheel has four openings 107 for the roller and is rotated one-fourth of a revolution for each revolution of the ring gear 39. The reduction between the star wheel and the translating element shaft is a 2 to 1 so that the translating shaft is rotated one-eighth of a revolution for each revolution of the ring gear, that is, for each actuation of the dial as the dial is actuated for each actuation of the ring gear 39.

The operation of the device is as follows: On the base of the casing there is a socket into which a cord may be plugged from any convenient electrical outlet. This socket is wired through the switch 88 to the electric motor. If it is desired to make connection with the telephone of a particular person whose name appears upon the front of the casing (see Fig. 5), the manual control lever 86 is moved along the slot until it is opposite that particular name. It is then swung to the right or left towards the particular name plate. In this position the abutment finger on the control shaft will be opposite the translating element corresponding to the telephone call number of the telephone belonging to the person whose name the control lever is adjacent. Upon moving the control lever towards the nameplate one of the lugs 87 on the control lever enters the notch, and the shaft is rotated. Rotation of the shaft (see Fig. 6) transmits motion through the link 93 and the lever 92 to the shaft 90 and from the shaft 90 (see Fig. 2) through the arm 89 to the toggle switch 88, throwing the toggle switch to the "on" position and supplying current to the motor 32. The motor starts rotating and through the train of reducing gears 33 rotates the shaft 34 (see Fig. 3) carrying the pinion 35. The pinion rotates the ring gear 39 and through the pinion 43, gear 44 and pinion 45, the annular gear 48 secured to the bracket 49. As the bracket rotates, the cam follower 103 on the link 102 connected to the lever arm 94b on the shaft 80 engages the outer or inner surface of the cam 53, depending upon which direction the control lever was swung. In this position, the shaft 80 is held in the operative position against the action of the abutting plunger 96 or 97 which tends to return the shaft to the neutral position and the control lever 80 is locked in the notch.

Further movement of the bracket 49 brings one of the sprocket teeth 54 into engagement with the lug 28 on the sleeve 27 and rotates the sleeve on the control shaft through one-eighth of a revolution. This movement of the sleeve is transmitted through the convolute spring 30 and the collar 31 to the control shaft 26 which rotates until the abutment finger (see Fig. 4) abuts against the abutment surface of the first abutment projection 56 of the translating element and further movement of the control shaft is restrained, the additional movement of the sleeve 27 being absorbed by the spring 30. This rotational movement of the control shaft is transmitted through the segmental gear 25 (see Fig. 2) and pinion 24 to the vertical shaft 22, through the bevel gears 21 and 22 to the shaft 16 and through the bevel gears 15 and 14 and the shaft 6 to the dial lever 3. The dial is thus rotated an amount in proportion to the rotation of the control shaft and determined by the length of the first abutment projection on the translating element. As the sprocket tooth 54 releases the lug 28 on the sleeve 27, the sleeve is returned to its former position by the action of the spring 30 and the control shaft is released thus releasing the dial which returns to its initial position transmitting its motion through the gears to the segmental rack on the control shaft. The control shaft is positively returned to its initial position by the spring 104. The lug 28 and the stop 29 on the hub of the segmental gear meet to position the sleeve to meet the next sprocket tooth 54.

As the dial and the control shaft are returning to their initial positions, the roller 107 on the ring gear 39 moves into one of the slots in the star wheel 108 and rotates the star wheel through one-fourth of a revolution, this motion is transmitted through the reduction gears 111 and 112 to the translating element shaft 57 which is, as has been heretofore explained, rotated through one-eighth of a revolution, bringing the next abutment surface 56 into registering position with the abutment finger on the control shaft. The above described operation is repeated for each of the abutment projections during which the bracket 49 makes but one complete revolution at which time the cam follower 103 on the lever comes again into register with the cut-out section of the cam 53 and thus releases the shaft 80 which is returned to the initial position by virtue of the depressed, spring-pressed plunger 96 or 97. On returning to its neutral position the control lever 86 is moved in alignment with the slot in the face of the casing and the toggle switch is actuated to cut off the motor. Any other number represented by a translating element on the dialing device may be secured in the same manner.

If it is desired to actuate the telephone dial manually, the arm 8 extending from the dialing mechanism casing may be swung about its extension 10 as a pivot. There is a pin 113 mounted in a housing 114 and pressed outwardly by a spring 115 which engages a semi-spherical recess in the gear housing to position the arm with respect to the dialing device when the arm is returned to the operative position. To maintain the arm in the proper position vertically, the extension 10 is provided with a circumferential groove 116 intermediate its ends and a set screw 117 threaded through the casing extends into this groove to prevent axial movement of the sleeve.

It will be apparent that with the dialing device described above, the operator, by a single manual operation, may secure any one of several

telephone numbers and is free, after actuating the control lever and while the number is being dialed, to attend to either internal calls or incoming calls on other trunk lines, the dialing device being left to secure the number desired while the operator is attending to calls on other trunks or internal office calls. Thus, the time consumed in securing calls and the necessary labor is greatly reduced.

It is obvious that various changes may be made by those skilled in the art in the details of the embodiment herein illustrated and described within the principle and scope of my invention as expressed in the appended claims.

I claim:

1. A telephone dialing device for selectively actuating the dial of an automatic telephone comprising means for actuating the dial of a telephone, operating means for the dial actuating means, a plurality of translating elements each adapted to convert movement of the operating means into successive selective movements of the dial actuating means to progressively dial the several items of a particular call number, and control means operatively related to the translating elements and shiftable with respect thereto for selectively associating the dial actuating means with the several translating elements.

2. A telephone dialing device for selectively actuating the dial of an automatic telephone comprising means for actuating the dial of a telephone, operating means for the dial actuating means, a plurality of translating elements each adapted to convert movement of the operating means into successive selective movements of the dial actuating means to progressively dial the several items of a particular call number, and a single control element operatively related to the translating elements and shiftable with respect thereto for selectively associating the dial actuating means with the several translating elements.

3. A telephone dialing device for selectively actuating the dial of an automatic telephone comprising means for actuating the dial of a telephone, operating means for the dial actuating means, a plurality of translating elements each adapted to convert movement of the operating means into successive selective movements of the dial actuating means to progressively dial the several items of a particular call number, control means cooperating with the translating elements for controlling the movements of the dial actuating means, and means for selectively positioning the control means with respect to the several translating elements.

4. A telephone dialing device for selectively actuating the dial of an automatic telephone comprising means for actuating the dial of a telephone, operating means for the dial actuating means, a plurality of translating elements each adapted to convert movement of the operating means into successive selective movements of the dial actuating means to progressively dial the several items of a particular call number, control means cooperating with the translating elements for controlling the movements of the dial actuating means, and manually operable means for selectively positioning the control means with respect to the several translating elements.

5. A telephone dialing device for selectively actuating the dial of an automatic telephone comprising means for actuating the dial of a telephone, operating means for the dial actuating means, a plurality of translating elements each adapted to convert movement of the operating means into successive selective movements of the dial actuating means to progressively dial the several items of a particular call number, and a single control element operatively related to the translating elements and cooperating therewith for controlling the movements of the dial actuating means, and manual means for selectively positioning the control element with respect to the several translating elements.

6. A telephone dialing device for selectively actuating the dial of an automatic telephone comprising means for actuating the dial of a telephone, a power device for operating the dial actuating means, a plurality of translating elements each adapted to translate movement of the operating means into successive selective movements of the dial actuating means to progressively dial the several items of a particular call number, control means cooperating with the translating elements for controlling the movements of the dial actuating means, and means for selectively positioning the control means with respect to the several translating elements including means for controlling the operation of the power device.

7. A telephone dialing device for selectively actuating the dial of an automatic telephone comprising means for actuating the dial of a telephone, a power device for operating the dial actuating means, a plurality of translating elements each adapted to translate movement of the operating means into successive selective movements of the dial actuating means to progressively dial the several items of a particular call number, control means cooperating with the translating elements for controlling the movements of the dial actuating means, and manually operable means for positioning the control means with respect to the several translating elements and controlling the operation of the power device.

8. A telephone dialing device for selectively actuating the dial of an automatic telephone comprising means for actuating the dial of a telephone, a power device for operating the dial actuating means, a plurality of translating elements each adapted to translate movement of the operating means into successive selective movements of the dial actuating means to progressively dial the several items of a particular call number, control means cooperating with the translating elements for controlling the movements of the dial actuating means, manually operable means for positioning the control means with respect to the several translating elements and controlling the operation of the power device and means for preventing the starting of the power device while the control means are not operatively related to a translating element.

9. A telephone dialing device for selectively actuating the dial of an automatic telephone comprising means for actuating the dial of a telephone, operating means adapted to intermittently operate the dial actuating means through a definite predetermined distance, a flexible connection between the dial actuating and the operating means, and means for selectively limiting successive movements of the dial actuating means.

10. A telephone dialing device for selectively actuating the dial of an automatic telephone comprising means for actuating the dial of a telephone, a power device, means for transmitting movement of the power device to the actuating means including means for converting the

movement of the power device into intermittent movement of an element through a predetermined distance, a flexible connection between the intermittently movable element and the dial actuating means, and means for selectively limiting successive movements of the dial actuating means.

11. A telephone dialing device for selectively actuating the dial of an automatic telephone comprising means for actuating the dial of a telephone, operating means adapted to intermittently operate the dial actuating means through a definite predetermined distance, a flexible connection between the dial actuating and the operating means, a plurality of translating elements each adapted to selectively limit successive movement of the dial actuating means to progressively dial the items of a call number, and means selectively operable for operatively relating the dial actuating means and the several translating elements.

12. A telephone dialing device for selectively actuating the dial of an automatic telephone comprising means for actuating the dial of a telephone, operating means adapted to intermittently operate the dial actuating means through a definite predetermined distance, a flexible connection between the dial actuating and the operating means, a plurality of translating elements each adapted to selectively limit successive movements of the dial actuating means, control means adapted to cooperate with the translating elements, and means for selectively positioning the control means with respect to the several translating elements.

13. A telephone dialing device for selectively actuating the dial of an automatic telephone comprising means for actuating the dial of a telephone, a power device, means for transmitting movement of the power device to the dial actuating means including means for converting unidirectional movement of the power device into intermittent movement of an element through predetermined distances, a flexible connection between said intermittently movable element and the dial actuating means, a plurality of translating elements each adapted to selectively limit successive movements of the dial actuating means, control means adapted to cooperate with the translating elements, and means for selectively positioning the control means with respect to the several translating elements.

14. A telephone dialing device for selectively actuating the dial of an automatic telephone comprising means for actuating the dial of a telephone, a power device, means for transmitting movement of the power device to the dial actuating means including means for converting unidirectional movement of the power device into intermittent movement of an element through predetermined distances, a flexible connection between said intermittently movable element and the dial actuating means, a plurality of translating elements each adapted to selectively limit successive movements of the dial actuating means, control means adapted to cooperate with the translating elements, and manually operable means for selectively positioning the control means with respect to the translating elements.

15. A telephone dialing device for selectively actuating the dial of an automatic telephone comprising means for actuating the dial of a telephone, a power device, means for transmitting movement of the power device to the dial actuating means including means for converting unidirectional movement of the power device into intermittent movement of an element through predetermined distances, a flexible connection between said intermittently movable element and the dial actuating means, a plurality of translating elements each adapted to selectively limit successive movements of the dial actuating means, control means adapted to cooperate with the translating elements, and manually operable means for selectively positioning the control means with respect to the translating elements and including means for controlling the operation of the power device.

16. In a dialing device for selectively actuating the dial of an automatic telephone, means for actuating the dial of a telephone, operating means for the dial actuating means adapted to intermittently move the dial actuating means through a predetermined distance, and a flexible connection between the operating means and the dial actuating means.

17. In a dialing device for selectively actuating the dial of an automatic telephone, means for actuating the dial of a telephone, means for operating the dial actuating means adapted to intermittently move the dial actuating means through a predetermined distance, a flexible connection between the operating means and the dial actuating means, a plurality of translating elements each adapted to limit successive movements of the dial actuating means, a movably mounted control element operatively related to the dial actuating means and adapted to cooperate with the translating elements, manually operable means for selectively shifting the control element relative to the translating elements.

18. In a dialing device for selectively actuating the dial of an automatic telephone, means for actuating the dial of a telephone, means for operating the dial actuating means adapted to intermittently move the dial actuating means through a predetermined distance, a flexible connection between the operating means and the dial actuating means, a plurality of translating elements each having a plurality of limiting surfaces thereon, a movably mounted control element connected to the dial actuating means and having an abutment adapted to cooperate with the abutment surfaces of the translating elements, and manually operative means for selectively positioning the control element with respect to the translating elements.

19. In a dialing device for selectively actuating the dial of an automatic telephone, means for actuating the dial of a telephone, means for operating the dial actuating means adapted to intermittently move the dial actuating means through a predetermined distance, a flexible connection between the operating means and the dial actuating means, a plurality of translating elements each having a plurality of limiting surfaces thereon, a movably mounted control element connected to the dial actuating means and having an abutment adapted to cooperate with the abutment surfaces of the translating elements, manually operative means for selectively positioning the control element with respect to the translating elements, and means for moving the translating elements upon each operation of the dial actuating means to bring the several abutment surfaces successively into limiting position with respect to the control element.

LOUIS H. MORIN.