(12) INTERNATIONAL APPLICATION PUBLISHED UNDER THE PATENT COOPERATION TREATY (PCT)

(19) World Intellectual Property Organization
International Bureau

(43) International Publication Date
12 August 2021 (12.08.2021)

WIPO | PCT

(10) International Publication Number
WO 2021/158127 A1

(51) International Patent Classification:
G01R 31/28 (2006.01) *A61M 16/16* (2006.01)

(21) International Application Number:
PCT/NZ2021/050013

(22) International Filing Date:
03 February 2021 (03.02.2021)

(25) Filing Language: English

(26) Publication Language: English

(30) Priority Data:
62/970,047 04 February 2020 (04.02.2020) US

(71) Applicant: **FISHER & PAYKEL HEALTHCARE LIMITED** [NZ/NZ]; 15 Maurice Paykel Place, East Tamaki, Auckland, 2013 (NZ).

(72) Inventors: **YU, Yintao**; 15 Maurice Paykel Place, East Tamaki, Auckland, 2013 (NZ). **ALNASHI, Sinaa**; 15 Maurice Paykel Place, East Tamaki, Auckland, 2013 (NZ). **LIANG, Wenjie Robin**; 15 Maurice Paykel Place, East Tamaki, Auckland, 2013 (NZ). **TSANG, Jonathan Luke Hoi-Man**; 15 Maurice Paykel Place, East Tamaki, Auckland, 2013 (NZ).

(74) Agent: **ELLIS TERRY** et al.; PO Box 10932, Wellington, 6143 (NZ).

(81) Designated States *(unless otherwise indicated, for every kind of national protection available)*: AE, AG, AL, AM, AO, AT, AU, AZ, BA, BB, BG, BH, BN, BR, BW, BY, BZ, CA, CH, CL, CN, CO, CR, CU, CZ, DE, DJ, DK, DM, DO, DZ, EC, EE, EG, ES, FI, GB, GD, GE, GH, GM, GT, HN, HR, HU, ID, IL, IN, IR, IS, IT, JO, JP, KE, KG, KH, KN, KP, KR, KW, KZ, LA, LC, LK, LR, LS, LU, LY, MA, MD, ME, MG, MK, MN, MW, MX, MY, MZ, NA, NG, NI, NO, NZ, OM, PA, PE, PG, PH, PL, PT, QA, RO, RS, RU, RW, SA, SC, SD, SE, SG, SK, SL, ST, SV, SY, TH, TJ, TM, TN, TR, TT, TZ, UA, UG, US, UZ, VC, VN, WS, ZA, ZM, ZW.

(84) Designated States *(unless otherwise indicated, for every kind of regional protection available)*: ARIPO (BW, GH, GM, KE, LR, LS, MW, MZ, NA, RW, SD, SL, ST, SZ, TZ, UG, ZM, ZW), Eurasian (AM, AZ, BY, KG, KZ, RU, TJ, TM), European (AL, AT, BE, BG, CH, CY, CZ, DE, DK, EE, ES, FI, FR, GB, GR, HR, HU, IE, IS, IT, LT, LU, LV, MC, MK, MT, NL, NO, PL, PT, RO, RS, SE, SI, SK, SM,

(54) Title: RESPIRATORY OR SURGICAL HUMIDIFIER AND METHOD OF USE

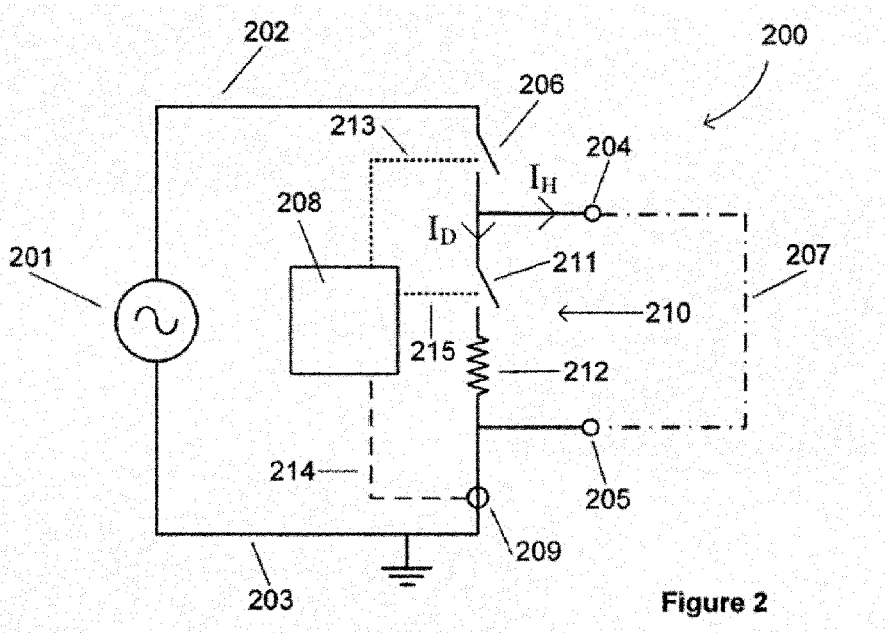

Figure 2

(57) Abstract: An improved system and method of monitoring the operation of a respiratory or surgical humidifier system. A controllable load can be connected across output terminals to a tube heating element to test the operation of a tube heating element supply circuit. A range of tests may be performed by controlling the state of one or more components and monitoring one or more sensors. Tests may be performed either during or not during therapy and either with a gas supply tube connected or not. Transient currents may also be detected and the power supply to a tube heating element can be stopped where transient currents outside a permitted range are detected.

WO 2021/158127 A1

[Continued on next page]

TR), OAPI (BF, BJ, CF, CG, CI, CM, GA, GN, GQ, GW, KM, ML, MR, NE, SN, TD, TG).

Published:

— *with international search report (Art. 21(3))*

RESPIRATORY OR SURGICAL HUMIDIFIER AND METHOD OF USE

FIELD OF THE DISCLOSURE

[0001] The present disclosure relates to respiratory and/or surgical humidifiers, and respiratory or breathing assistance systems for gases to be supplied to a patient or user via a gas supply tube incorporating a tube heating element.

BACKGROUND

[0002] Respiratory and/or surgical humidifiers are used in various environments, such as hospital, medical facility, residential care, palliative care and home environments. For a range of respiratory applications, it is beneficial to humidify gases being supplied to a patient or user. These applications include where the gases are for breathing by the patient or user and where the gas is being supplied during surgery to the patient or user.

[0003] In the case of noninvasive ventilation therapy (e.g. with a face or nasal mask), inhalation of dry breathing gasses can dry out the tissues of the patient or user's airway (e.g., the nasal mucosa). Humidifying the breathing gasses prior to inspiration can mitigate drying of the patient or user's airway tissue. Furthermore, this humidification can increase the patient or user's comfort, and improve the patient or user's tolerance to the noninvasive ventilation (NIV).

[0004] In the case of high flow therapy, humidified gases are delivered to the patient or user at high flows through an unsealed interface. The patient or user may be spontaneously breathing or may be apneic, such as under anesthesia. As with noninvasive ventilation, humidifying the gases inspired during high flow therapy can mitigate drying of the airway tissue, increase comfort, and improve tolerance to the therapy.

[0005] In the case of positive airway pressure (PAP) therapy, a PAP apparatus (that includes a blower and a humidifier) can be used to provide pressure therapy to the patient or user. This therapy may be in the form of, for example, continuous positive airway pressure therapy (CPAP). As with noninvasive ventilation

and high flow therapy, humidifying the gases inspired during PAP therapy can mitigate drying, increase comfort, and improve tolerance.

[0006] In the case of surgical gases, or invasive ventilation (when the gases delivered to the patient bypass the upper airway), humidification of the gases has been found to improve patient comfort and provide physiological benefits (such as improved mucus transport). Furthermore, humidification can be necessary for improving post-operative outcomes, and for ensuring patient or user safety. For example, humidification can help to prevent airway obstruction (caused by inspissation of airway secretion) and/or disruption of the airway epithelium.

[0007] In any of the therapies mentioned above, humidified gases can be delivered to a patient via a gas supply tube. This tube can be heated by an in-built tube heating element. Heating the gas supply tube prevents condensation of the warm, humid breathing gases as they travel from the humidifier to the patient. Preventing this condensation helps to ensure that the breathing gases are supplied to the patient or user at the required temperature and humidity.

SUMMARY

[0008] If a humidifier malfunctions during use, then the gases supplied to the patient (via the gas supply tube) may not be correctly humidified. Incorrect humidification can result in risks to the patient (or other user). These risks can include, for example, transient currents in the tube heating element, prolonged exposure of the airway to dry gases, discomfort, condensation blocking the airflow, high enthalpy being conveyed to the patient, high surface temperature of the gas supply tube or damage to the respiratory humidifier system.

[0009] For a humidifier to operate correctly, all of the sub-systems within it must operate correctly. If a fault (capable of causing malfunction) occurs in any of these sub-systems, the humidifier must have means to identify the fault and alert the person administering the therapy (e.g. a healthcare professional or the patient themselves in the case of home-based administration). The present disclosure is focused on detecting faults associated with two humidifier sub-systems: the gas

supply tube heating element and the power supply path—which transfers power from the heater base unit to the gas supply tube heating element.

[0010] Some existing humidifiers have systems that can detect fault conditions (in the gas supply tube heating element and the power supply path). However, these systems have limitations. For example, these fault-detection systems may be complex, may perform only a limited range of tests, may not allow detection of certain faults during therapy, and may only be capable of detecting faults when a gas supply tube with a heating element is connected.

[0011] The present disclosure provides examples of humidifier fault-detection systems that overcome some of the limitations in existing humidifier fault-detection systems - specifically those used to detect faults associated with the gas supply tube heating element and its power supply path. The fault-detection systems and methods in the present disclosure are based on monitoring power attributes when a switchable load is switched into the power supply path. This switching and monitoring may be performed regardless of whether there is a gas supply tube (with a functioning heating element) attached. This switching and monitoring may also be performed during therapy without any interruption to therapy. The fault-detection systems disclosed herein can also have any of the following advantages, and/or other advantages. For example, the monitoring systems and methods disclosed herein allow a wide range of tests to be performed using relatively simple additional components. Such tests may include detecting any of a number of possible fault conditions. These fault conditions may include a power flow controller fault (such as an open-circuit or short-circuit fault), a current sensor fault, a tube heating element fault, or a general fault. Such tests may also be used to detect the presence of a tube heating element. Furthermore, the implementation is simple, reliable, robust and inexpensive.

[0012] The detection and/or alarm methods described herein can be incorporated into a variety of respiratory and/or surgical humidifier systems, such as CPAP devices, high flow therapy devices, surgical humidifiers, respiratory humidifiers, infant CPAP devices, infant high flow devices, NIV therapy devices, and the like.

[0013] In some configurations, a respiratory or surgical humidifier can comprise power supply lines configured to supply power via a supply path to respective output terminals; a switchable load electrically connected across the output terminals; a control circuit configured to control switching of the switchable load; and a sensor that monitors at least one attribute of power supplied via the supply path and provides attribute information to the control circuit. The control circuit may be configured to control the switchable load to operate in different states and determine operation of the respiratory or surgical humidifier based on the attribute information for the different states.

[0014] In some configurations, the control circuit can be configured to control the switchable load to test the respiratory or surgical humidifier whilst power is supplied to a tube heating element electrically connected across the output terminals.

[0015] In some configurations, the respiratory or surgical humidifier can include a power flow controller controlled by the control circuit to vary the level of power supplied via the supply path.

[0016] In some configurations, the power flow controller can be a controllable switch in the supply path.

[0017] In some configurations, the control circuit can control state combinations of the switchable load and power flow controller to monitor operation of the respiratory or surgical humidifier based on the attribute information for the different state combinations.

[0018] In some configurations, the switchable load can include a controllable switch and an impedance.

[0019] In some configurations, the controllable switch can be a semiconductor switch.

[0020] In some configurations, the impedance can be a resistor.

[0021] In some configurations, the impedance can include a reactive impedance.

[0022] In some configurations, a voltage sensor can be provided across the power supply lines.

[0023] In some configurations, the attribute information can include the voltage across the power supply lines.

[0024] In some configurations, the sensor can be a current sensor.

[0025] In some configurations, the sensor can be an inductive, Hall effect, or shunt resistance-based sensor.

[0026] In some configurations, the attribute information includes the current flowing in the supply path.

[0027] In some configurations, the control circuit can be configured to switch the power flow controller on whilst the switchable load is switched off and receive current information from the current sensor representing a first current level.

[0028] In some configurations, the control circuit can be configured to detect an error if the first current level is outside a permitted range.

[0029] In some configurations, the control circuit can be configured to switch the power flow controller on whilst the switchable load is switched on and receive current information from the current sensor representing a second current level.

[0030] In some configurations, the control circuit can be configured to detect an error if the difference between the first and second current levels is outside a permitted range.

[0031] In some configurations, the control circuit can be configured to detect an error if the difference between the first current level and an expected first current level or the difference between the second current level and an expected second current level is outside a permitted range.

[0032] In some configurations, the expected first current level, expected second current level or the permitted range for the difference between the first and second current levels can be determined on the basis of a voltage level across the output terminals and a switchable load impedance and a tube heating element impedance.

[0033] In some configurations, the permitted current range can be a permitted current level plus or minus a margin of error.

[0034] In some configurations, the control circuit can be configured to detect a fault if neither the first or second current is above a minimum threshold level.

[0035] In some configurations, the control circuit can be configured to receive current information from the current sensor when the power flow controller is switched off and the switchable load is switched on, and detect a fault if the current is above a low current threshold level.

[0036] In some configurations, a transient current detector can be provided in the supply path.

[0037] In some configurations, the transient current detector can include a pair of transistors configured to detect positive or negative transient voltages across an inductor in the supply path.

[0038] In some configurations, a respiratory or surgical humidifier can comprise a power flow controller configured to control power supplied via a supply path to respective output terminals; a switchable load electrically connected across the output terminals; a current sensor that monitors current supplied via the supply path to develop current information; a control circuit configured to receive the current information from the current sensor, control the power flow controller to supply power via the output terminals, and control switching of the switchable load with the control circuit configured to: switch the power flow controller on whilst the switchable load is switched off and receive current information from the current sensor representing a first current level; switch the power flow controller on whilst the switchable load is switched on and receive current information from the current sensor representing a second current level; and determine operation of the respiratory humidifier based on at least the first and second current levels.

[0039] In some configurations, a respiratory or surgical humidifier can comprise power supply lines configured to supply power via a supply path to respective output terminals; a switchable load electrically connected across the output terminals; a current sensor that monitors current supplied via the supply path to develop current information; a control circuit configured to receive the current information from the current sensor and control switching of the switchable load in which the control circuit is configured to switch the switchable load off and receive

current information from the current sensor representing a first current level; switch the switchable load on and receive current information from the current sensor representing a second current level; and detect an error if the difference between the first and second current levels is outside a permitted range.

[0040] In some configurations, a respiratory or surgical humidifier can comprise a power flow controller configured to supply power via a supply path to respective output terminals; a switchable load electrically connected across the output terminals; a current sensor that monitors current supplied via the supply path to develop current information; a control circuit configured to receive the current information from the current sensor, control switching of the power flow controller to supply power via the output terminals and control switching of the switchable load with the control circuit configured to: switch the power flow controller on whilst the switchable load is switched off and receive current information from the current sensor representing a first current level; switch the power flow controller on whilst the switchable load is switched on and receive current information from the current sensor representing a second current level; detect an error if the second current level is outside a permitted range; and detect an error if the difference between the first and second current levels is outside a permitted range.

[0041] In some configurations, a respiratory or surgical humidifier can comprise: a power flow controller configured to supply power via a supply path to respective output terminals; a switchable load electrically connected across the output terminals; a current sensor that monitors current supplied via the supply path to develop current information; a control circuit configured to receive the current information from the current sensor, control switching of the power flow controller to supply power via the output terminals, and control switching of the switchable load with the control circuit configured to: switch the power flow controller on whilst the switchable load is switched on and receive current information from the current sensor representing a test current level; and detect an error if the test current level is outside a permitted range.

[0042] In some configurations, a respiratory or surgical humidifier can comprise a power flow controller configured to control power supplied via a supply

path to respective output terminals; a switchable load electrically connected across the output terminals; and a control circuit configured to control the switchable load whilst the power flow controller supplies power to the output terminals to perform in use monitoring of the respiratory or surgical humidifier.

[0043] In some configurations a respiratory or surgical humidifier can include a housing configured to receive a humidifier chamber; a heater plate configured to transfer heat to a humidifier chamber when received by the housing; a heater element configured to heat the heater plate; and a power controller configured to control a level of power supplied to the heater element.

[0044] In some configurations, a method of monitoring the operation of a respiratory or surgical humidifier having output terminals for supplying power to a heater element of a gas supply tube can comprise temporarily connecting a dummy load across the output terminals whilst power is supplied to the heater element and evaluating one or more power supply attributes to monitor correct operation of the respiratory humidifier.

[0045] In some configurations, an error in the operation of the respiratory or surgical humidifier can be detected if a current supplied via the output terminals is below a threshold value.

[0046] In some configurations a first current supplied via the output terminals can be measured when the dummy load is not connected across the output terminals and a second current supplied via the output terminals can be measured when the dummy load is electrically connected across the output terminals and an error in the operation of the respiratory or surgical humidifier can be detected if the difference between the first and second currents is outside a permitted range.

[0047] In some configurations a respiratory or surgical humidifier includes a transient current detector in the power supply path configured to detect positive or negative transient voltages across an inductor in the supply path.

BRIEF DESCRIPTION OF THE DRAWINGS

[0048] These and other features, aspects, and advantages of the present disclosure are described with reference to the drawings of certain embodiments, which

are intended to schematically illustrate certain embodiments and not to limit the disclosure.

[0049] Figure 1A illustrates schematically an example respiratory humidifier system.

[0050] Figure 1B illustrates schematically an example heater base unit of the respiratory humidifier system of Figure 1A.

[0051] Figure 1C illustrates schematically an example respiratory humidifier system.

[0052] Figure 1D illustrates schematically an example heater base unit of the respiratory humidifier system of Figure 1C.

[0053] Figure 1E illustrates schematically a partial view of the heater base unit and an example breathing circuit tube heating element adapter of Figure 1C.

[0054] Figure 2 illustrates an example circuit for monitoring the operation of a respiratory or surgical humidifier.

[0055] Figure 3 illustrates a modified example circuit for monitoring the operation of a respiratory or surgical humidifier.

[0056] Figure 4 illustrates an example circuit (including a transient current detector) for monitoring the operation of a respiratory or surgical humidifier.

[0057] Figure 5 illustrates an example circuit for the transient current detector circuit shown in Figure 3.

[0057A] Figure 6 illustrates a modified form of the transient current detector circuit shown in Figure 5.

DETAILED DESCRIPTION

[0058] Although certain embodiments and examples are described below, those of skill in the art will appreciate that the disclosure extends beyond the specifically disclosed embodiments and/or uses and obvious modifications and equivalents thereof. Thus, it is intended that the scope of the disclosure herein disclosed should not be limited by any particular embodiments described below. For

example, component values and operating parameters are examples only and are not limiting.

Example Respiratory or Surgical Humidifier

[0059] The present disclosure provides examples of a respiratory humidifier configured to supply humidified and/or heated gas to a patient or user in multiple modes. The modes for the respiratory humidifier can include at least an invasive mode (for example, for patients with a bypassed airway) and a noninvasive mode (for example, for patients or users with breathing masks). Each mode can have individualized humidity output, which can be expressed as dew point output set points. For example, a user can select a set point appropriate for the current mode of operation. The non-invasive mode can have selectable dew point set points of, for example, 31 degrees Celsius, 29 degrees Celsius, 27 degrees Celsius, or others. The invasive mode can have a dew point set point of 37 degrees Celsius or others. Alternatively, the dew point set points may be continuously variable between upper and lower limits. Some respiratory humidifier systems disclosed herein can also include a high flow, unsealed mode or any other modes known to those of skill in the art. The disclosed circuits and methods may be similarly applied in a surgical humidifier which may be used, for example, in laparoscopic surgery.

[0060] Referring to Figures 1A and 1C, an example respiratory humidifying system 100, 101 can include a heater base unit 102 having a heater plate 120 (see Figures 1B and 1D). The heater plate 120 can include one or more heating element(s). The heater base unit 102 can have a housing and a controller (for example, a microprocessor) contained within the housing for controlling the supply of energy to the heating element(s) of the heater plate 120.

[0061] The humidifier heater plate 120 can have a temperature sensor (for example, a temperature transducer, thermistor, or other types of temperature sensor). Multiple different temperature sensors may also be used. The temperature sensor can measure a temperature of the heater plate 120. The temperature sensor can be in electrical communication with the controller in the heater base unit 102 so that the controller can monitor the temperature of the heater plate 120.

[0062] The humidifier chamber 103 can be removably received and retained on the heater base unit 102, such that the humidifier chamber base is positioned in contact with the heater plate 120 in the heater base unit 102. Referring to Figures 1B and 1D, which illustrate examples of the heater base unit 102 of Figures 1A and 1C respectively, the humidifying base 102 can have a collar 124 for engaging with a flange on the humidifier chamber 103, such as shown in Figures 1A and 1C. The collar 124 defines a lip that engages a flange of the humidifier chamber 103 to retain the humidifier chamber 103 in an operative position on the heater base 102. The humidifier chamber 103 can include a thermally conductive base. When engaged with the heater base unit 102, the conductive base of the humidifier chamber 103 can be in contact with the heater plate 120, such as an upper surface of the heater plate 120. Water inside the chamber 103 is heated when a power signal is sent to the heating element to energize the heating element. The chamber 103 can also be connected to a water source 142 (Figure 1C), which can add water to the chamber 103 when the water is low or completely out in the chamber 103. Adding of water can be manually performed, such as upon a warning from the system 101 that there may be a low water or water-out condition, or automatically performed, such as using a float valve connected to a water supply.

[0063] With continued reference to Figures 1A and 1C, the gases to be humidified can include one or more of air, oxygen, anesthetic, other auxiliary gases, or any mixture of gases. The gases can be supplied to the humidifier chamber 103 through a gas inlet 104, which can be connected to a gas source, such as a ventilator, in the case of CPAP therapy a CPAP blower, or a remote source. For high flow therapy, a blower or further alternatively a wall source with a flow and/or pressure regulator can supply the gases. The humidifier chamber 103 also includes a gases outlet 105, which can connect to a breathing circuit 106. The breathing circuit 106 can convey humidified and heated gases to a patient or user. As shown in Figure 1A, a patient end 107 of the breathing circuit 106 can connect to a patient interface, such as a nasal cannula 113 or a nasal mask 114. The breathing circuit 106 can also connect to other types of patient or user interfaces, such as a full-face mask, total-face mask, nasal pillows mask, endotracheal tube, or others. The breathing circuit 106 of Figure

1C can similarly be connected to any suitable patient interface. The breathing circuit 106 may include a gas supply tube with or without a tube heating element. The respiratory humidifying system 100, 101 may be configured for use with both heated and unheated gas supply tubes or breathing circuits.

[0064] A tube heating element 110 (such as one or more heater wires embedded in the gas supply tube wall, contained within the gas supply tube, or wrapped around the outside of the gas supply tube) can be provided in the breathing circuit 106. The tube heating element 110 can help prevent condensation of the humidified gases within the breathing circuit 106. The tube heating element 110 can also optionally be in electrical communication with the controller in the heater base unit 102. As shown in Figures 1C and 1E, a breathing circuit tube heating element adaptor cable 128 can have two connectors at two ends of the cable 128 for coupling the tube heating element 110 to the heater base unit 102 (such as to the controller of the heater base unit 102). Alternatively, the tube heating element adapter cable may be permanently electrically connected to a tube heating element supply circuit of the heater base unit 102, for example by soldering. The tube heating element adaptor cable 128 can facilitate an easy connection between the tube heating element 110 and the heater base unit 102. The tube heating element 110 is controlled by the controller, including the controlling of power to the tube heating element 110. The tube heating element 110 in the breathing circuit 106 reduces condensation and ensures the temperature and/or humidity of gases is maintained in a predetermined range. The tube heating element adaptor cable 128 can also include an ambient temperature sensor 126, which can allow the system 101 to adjust the tube heating element 110 power and/or heater plate power to compensate for ambient temperatures or changes in the ambient temperature. The ambient temperature sensor can alternatively be located anywhere that is exposed to the ambient air. A tube heating element indicator 130 can be embedded into the connector that couples to the heater base unit 102. The tube heating element indicator 130 can be illuminated when a properly functioning tube heating element 110 is connected to the heater base unit 102, and the system 101 can heat the gas inside the breathing circuit 106 via the tube heating element 110 to minimize condensate in addition to heating the gas passing through the humidifier

chamber 103 via the heater plate 120. If the tube heating element 110 is malfunctioning or not connected, the tube heating element indicator 130 is not illuminated (or is flashing), and the system 101 may heat the gas only by heating the water in the chamber 103 via the heater plate 120. Alternatively, the tube heating element indicator 130 may be illuminated when there is a fault or a disconnection of the adaptor cable 128 from the tube heating element 110. The illuminated indicator 130 can act as a visual message or a visual warning. The indicator 130 may not be illuminated if the tube heating element 110 is functioning correctly.

[0065] The controller of the respiratory humidifier system 100, 101 can control at least the heater plate 120, and preferably or optionally also the tube heating element 110, without additional sensors (for example, in the humidifier chamber, at the chamber outlet, in the breathing circuit, and/or elsewhere in the system). This can be achieved by estimating a heater plate operating point required to deliver a required humidity. For a given respiratory humidifier system, the controller can determine an appropriate level of power to apply to the heater plate 120. Applying power to the heater 120 can generate humidity and heat the gases. The heater plate power and temperature can be controlled to generate a predetermined amount of humidity. Additionally, the parameters can also optionally be used by the controller to provide a more appropriate level of energization to the tube heating element 110. As shown in Figures 1C and 1E, the system 101 can also include the ambient temperature sensor 126. The ambient temperature sensor can be located anywhere that is exposed to the ambient air. For example, the system 101 can include the ambient temperature sensor 126 on the tube heating element adaptor cable 128.

[0066] As shown in Figure 1E, a front panel of the heater base unit 102 can include a plurality of user controls and indicators, such as a power button 132, a humidity setting push button 134, and a plurality of (such as three, four, five or more) humidity settings indicators 136 (which can include LED lights) next to the humidity setting push button 134. The locations, shapes, and sizes of the user controls and indicators are not limiting. There can be four levels of humidity settings available which are indicated by the four humidity setting indicators 136. The four humidity settings may correspond to different types of therapies provided to a patient. For

example, the highest amount of humidity can be selected when the humidifier is operating in an invasive therapy mode. The lowest amount of humidity may be applied in a low flow oxygen therapy mode. The amount of humidity can be selected based on therapeutic requirements or therapy type, or it may be predefined. Alternatively, the humidifier 100, 101 may include a controller that is configured to automatically select the amount of humidity to be delivered based on a therapy mode, the patient, or the type of therapy being applied to the patient. Optionally, the humidifier 100, 101 may include a display or touch screen that may communicate information to the user. The touch screen may also be configured to receive inputs from the user.

[0067] The humidity level can be adjusted by pressing the humidity settings push button 134, which can also be a momentary push button. The front panel can also include a plurality of alarm indicators 138 (which can include LED lights) to indicate the following non-limiting examples of conditions: "water out" condition (including low water and water-out), tube heating element adaptor not connected, audible alarm muted, and a "See Manual" indication used to indicate that a fault has occurred within the system 101.

[0068] The system 101 can be suitable for providing respiratory therapy for different purposes, such as for critical care (for example, in the hospital) and home care. The system 101 is suitable for providing invasive, non-invasive and high flow therapies for both adult and pediatric patients.

[0069] With reference to Figure 2, an example tube heating element supply circuit for a respiratory or surgical humidifier can include an electric power source 201 that can supply power via a power supply path (which includes a power flow controller 206 and power supply lines 202 and 203) to output terminals 204 and 205. Power source 201 could be an AC or DC power supply but in this example is an AC power supply (including a transformer that reduces the supply voltage from mains voltage to about 22 Volts). A tube heating element 207 can be connected to output terminals 204 and 205 when the respiratory or surgical humidifier is providing therapy to heat gases within a gas supply tube. The tube heating element 207 can be in the form of one or more heater wires embedded in a gas supply tube wall, contained

within the gas supply tube, wrapped around the outside of the gas supply tube, or otherwise.

[0070] In this example, power flow controller 206 can be a controllable switch, such as a semiconductor switch, controlled by a control circuit 208 via control line 213. Power flow controller 206 could alternatively supply a number of different power levels or continuously vary the level of power supplied via the supply path. Control circuit 208 can include a microprocessor. Control circuit 208 can control the switching of flow controller 206 when a tube heating element is connected to ensure that a required amount of heating is provided to a gas within a gas supply tube. The tube heating element supply circuit can include a current sensor 209 for monitoring the current flowing in the supply path and providing attribute information in the form of the current level via data line 214 to control circuit 208. The current sensor 209 can be an inductive, Hall effect or shunt resistor-based sensor.

[0071] The tube heating element supply circuit can also include a switchable load 210 electrically connected across the output terminals 204 and 205. Switchable load 210 can include a controllable switch 211 in series with a "dummy" load 212. The controllable switch can be a semiconductor switch controlled by control circuit 208 via control line 215. The load 212 can be a resistance but can also be another form of impedance or composite impedance.

[0072] The control circuit 208 can be configured to control the switchable load 210 to test the operation of the respiratory or surgical humidifier either when no tube heating element 207 is connected across output terminals 204 and 205 or whilst power is supplied to the output terminals with a tube heating element 207 connected across output terminals 204 and 205 during therapy.

[0073] The control circuit 208 can also be configured to control the power flow controller 206 and the switchable load 210 to operate in different state combinations and monitor the operation of the respiratory or surgical humidifier. This monitoring may be based on the attribute information received from the current sensor 209 for different switch states of the switchable load 210 and power flow controller 206.

[0074] In one example the tube heating element supply circuit 200 of Figure 2 may be used in a fault checking method (where a tube heating element 207 is connected across terminals 204 and 205) where the following steps can be performed:

i. Control circuit 208 controls power flow controller 206 to switch on (if it is open at the start of the fault check) whilst switch 211 of switchable load 210 is switched off.

ii. Control circuit 208 receives attribute information in the form of a current level measurement from current sensor 209. In this case, where the power flow controller 206 and switch 211 are working as intended, a first current level (I_H) flowing through tube heating element 207 is measured.

iii. Control circuit 208 controls switch 211 of controllable load 210 to turn on.

iv. Control circuit 208 receives attribute information in the form of a second current level measurement from current sensor 209. In this case, where the power flow controller 206 and switch 211 are working as intended, the second current level measured is the sum of I_H flowing through tube heating element 207 and the current I_D flowing through the dummy load 212 (in this case a resistor).

v. Control circuit 208 (in this case including a microprocessor) determines the difference between the currents (referred to as "ΔI") being the second current level measured in step iv. minus the first current level measured in step ii.

vi. Control circuit 208 can determine whether there is a fault (potentially a fault in current sensor 209 or alternatively a fault in dummy load 212, dummy load switch 211 or power flow controller 206) by checking whether the difference in current (ΔI) is within a permitted current range.

vii. Control circuit 208 can determine whether a tube heating element is present or whether there is a fault (potentially a fault in the power flow controller 206 or tube heating element 207) by checking

whether the first current level measured in step ii., (I_H), is within a permitted range.

viii. Control circuit 208 can also determine that there is a fault in power flow controller 206 if the current measured by current sensor 209 is above a low current threshold level (at or near zero) when power flow controller 206 is switched off and dummy load switch 211 is switched on. With dummy switch 211 switched on such a fault may be detected whether a tube heating element is in circuit or not. Alternatively, where for example a heater wire is permanently connected, just the current I_H may be measured when power flow controller 206 is switched off and dummy load switch 211 is switched off. If the current is above a low current threshold level, for example 0.1 A, it may be determined that there is a fault in power flow controller 206.

[0075] It will be appreciated that not all of above steps need be carried out and that in some implementations only one or a selection of steps may be implemented. It will also be appreciated that the selected steps may be carried out in a different sequence.

[0076] By using the difference between currents in step vi. the fault checking method above may be performed whether a tube heating element is present or not, whether a tube heating element (if present) is functioning correctly or not, and whether a connected tube heating element is being used to provide therapy or not, as will be explained below. As the current difference may be expressed as:

$$\Delta I = (I_D + I_H) - I_H$$

Therefore:

$$\Delta I = I_D$$

[0077] Thus, the current ΔI will be equal to I_D irrespective of whether a heater wire is present or absent. This is because the current flowing through the heater wire is cancelled out in all cases.

[0078] Knowing that the test in step vi. isolates the current component I_D flowing through the controllable load 210, the expected current sensed by current

sensor 209 will be the supply voltage divided by the resistance of load 212. The permitted current range in step vi. may be the expected current plus or minus a permitted margin of error. For example, assuming no fault is present, with a 22V supply voltage and a 470 Ω resistance, the permitted range may be 22/470 +/- 20% (or some other acceptable error range). The test in step vi. may therefore test whether the control circuit is operating outside a permitted range (potentially due to a fault in the current sensor or a component in the supply path).

[0079] In step vii. the current I_H flowing through the tube heating element 207 may be monitored to determine whether a tube heating element 207 is present or not and, if present, if it is operating within an acceptable range (assuming no other faults have been identified in step vi.). The permitted current range may be the expected current plus or minus a permitted margin of error (for example +/- 20%). In this case the expected current may be $I_H = V/R_{Heating_Element_207}$ where V is the supply voltage across the output terminals. Alternatively, the expected current could be based on the current measured at step iv.. In this case the expected current would be $I_D + I_H = V/R_{Resistor_212} + V/R_{Heating_Element_207}$ and this may be tested against the current measured in step iv. For example, with a 22V supply voltage, a 470 Ω resistance 212, and a 24 Ω heater wire, the permitted range may be (22/470 + 22/24) +/- 20% (or some other acceptable error range). The test can alternatively simply be whether the expected current is below a lower threshold (i.e. $I_D + I_H < (V/R_{Resistor_212} + V/R_{Heating_Element_207}) * x\%$, where x provides a margin of error), or, using the values above, where the expected current is less than 0.8 * (22/470 + 22/24).

[0080] Where no fault is detected in step vi. and the current I_H is zero or negligible control circuit 208 may determine that a tube heating element is not present or not operating correctly. In some configurations a tube heating element may only be required where high levels of humidification are required. In such configurations if a user attempts to use a high humidification level where a tube heating element is not present or not working correctly control circuit 208 may provide a visual alert via indicators 136 and/or provide an audible alert and/or communicate an alert condition to a remote device and/or inhibit certain functionality (depending upon the nature of

the fault detected). For lower levels of humidification, therapy may be provided without the need for the tube heating element to be driven.

[0081] Control circuit 208 can run a fault check when the humidifier starts up and then intermittently during operation (e.g., every 10 minutes or every 2 hours). Each fault check occurrence has a negligible effect on the operation of the humidifier, due to the independence of the controllable load 210 from the tube heating element current path.

[0082] With reference to Figure 3, an example tube heating element supply circuit for a respiratory or surgical humidifier can also include a voltage sensor 216 for sensing the voltage across the voltage source and providing voltage information via a data line 217. The remaining circuit components are as in Figure 2 and so the same numerals have been used. Operation may be the same as for Figure 2 except that instead of assuming a constant voltage supply the actual supply voltage may be used by control circuit 208. This circuit may be appropriate where there is substantial variation of the supply voltage. This circuit also allows the identification of a fault due to the supply voltage not being within a required range.

[0083] In one example, the tube heating element supply circuit of Figure 3 can perform a fault checking method (where a tube heating element 207 is connected across terminals 204 and 205) where the following steps are performed:

i. Control circuit 208 controls power flow controller 206 to switch it on (if it is open at the start of the fault check) whilst switch 211 of switchable load 210 is switched off.

ii. Control circuit 208 receives attribute information in the form of a first current level measurement from current sensor 209. In this case the current I_H flowing through tube heating element 207 is measured. Control circuit 208 also receives attribute information in the form of a voltage level measurement from voltage sensor 216. A resistance can then be calculated using Ohm's law representing the resistance R_H of the tube heating element 207.

iii. Control circuit 208 controls switch 211 of controllable load 210 to turn on.

iv. Control circuit 208 receives attribute information in the form of a second current level measurement from current sensor 209. In this case the sum of current I_H flowing through tube heating element 207 and the current I_D flowing through resistor 212 is measured ($I_D + I_H$). Control circuit 208 also receives attribute information in the form of a voltage level (V_{iv}) measurement from voltage sensor 216.

v. Control circuit 208 (in this case including a microprocessor) determines an expected second current level I_{exp} according to the formula:

$$I_{exp} = \left(\frac{V_{iv}}{R_H} + \frac{V_{iv}}{R}\right)$$

where R is the known resistance 212.

vi. Control circuit 208 determines the difference between the current levels (εI) being the expected second current level I_{exp} minus the first current level (I_H) measured in step ii.

vii. Control circuit 208 determines whether there is a fault in current sensor 209 (or another component in the supply path) by checking whether the difference in current (εI) is within a permitted current range.

viii. Control circuit 208 can also determine whether there is a fault in the power flow controller 206 by checking whether the second current level measured in step iv. ($I_D + I_H$) is within a permitted range. Control circuit 208 can determine whether a tube heating element is present or whether there is a fault (potentially a fault in the power flow controller 206 or tube heating element 207) by checking whether the first current level (I_H) measured in step ii. is within a permitted variance from an expected first current level V_{iv}/R_H.

ix. Control circuit 208 can also determine whether there is a fault in power flow controller 206 by checking whether the second current level ($I_D + I_H$) is above a low current threshold level (at or near zero) when power flow controller 206 is switched off and dummy load

switch 211 is switched on. Alternatively, where for example a heater wire is permanently connected, just the first current level (I_H) may be measured when power flow controller 206 is switched off and dummy load switch 211 is switched off. If the current is above a low current threshold level, for example 0.1 A, it may be determined that there is a fault in power flow controller 206.

[0084] Should it be determined that a fault condition exists, control circuit 208 can turn off the power flow controller 206 and/or provide a visual alert via indicators 136 and/or provide an audible alert and/or communicate an alert condition to a remote device and/or inhibit certain functionality (depending upon the nature of the fault detected).

[0085] With reference to Figure 4, an example tube heating element supply circuit for a respiratory or surgical humidifier can also include a transient current detector capable of detecting transient currents outside of a permitted range. Transient currents in the form of short-lived, aperiodic spikes in the supply current could potentially arise in the case of a heater wire breakage and could potentially cause a gas supply tube to have a high surface temperature, melt or ignite from sparking. These situations can also occur from EMI and/or mains surge. To protect against these situations, a transient current detector can cause power supply to a tube heating element to be stopped where transient currents outside a permitted range are detected.

[0086] In the circuit shown in Figure 4, like elements to those shown in Figures 2 and 3 are given like numbers. As shown in Figure 4, an inductor 218 may be included in the power supply path with sense lines 221 and 222 connected to a transient current detection circuit 219. When transient current detection circuit 219 detects a transient current outside of a permitted range it can send a transient current detection signal or a feedback signal via signal line 220 to control circuit 208. In response, control circuit 208 can turn power flow controller 206 off to terminate power supply to the tube heating element. Additionally and/or alternatively the transient current detection circuit 219 can turn power flow controller 206 off directly via signal line 231 to terminate power supply to the tube heating element. Additionally and/or alternatively control circuit 208 can turn off other components,

such as the heater plate, or generate an alarm when transient current detection circuit 219 detects a transient current outside of a permitted range Although Figure 4 illustrates a circuit further comprising the switchable load 210 described above, it will be appreciated that the disclosed transient current detector may alternatively be used independently of the disclosed fault detection methods and circuits.

[0087] Figure 5 shows a simple transient current detection circuit 219 that can be used to detect transient currents. A first transistor detection circuit, including transistor 225 and biasing resistors 223 and 224, is connected to sense lines 221 and 222 and switches on when a difference in sense line voltages ($V_{221} - V_{222}$) is above a permitted level. A second transistor detection circuit, including transistor 228 and biasing resistors 226 and 227, is also connected to sense lines 221 and 222 and switches on when a difference in sense line voltages ($V_{222} - V_{221}$) is above a permitted level. Biasing resistor 229 holds transient current detection output signal line 230 high when both transistor 225 and 228 are switched off (high resistance). Output signal line 230 is connected to power flow controller 206 by line 220. When either transistor 225 or 228 switches on, transient current detection output signal line 230 is pulled down and in response control circuit 208 can turn off power flow controller 206. Figure 6 shows a modified transient current detection circuit 219 which is the same as Figure 5 except that a signal conditioning circuit 240 is provided prior to output signal line 230. It may be desirable for output signal line 230 to be held or extended in a pulled down state for a period of time rather than just during the period that transient currents are detected. The signal conditioning circuit 240 can be a monostable multivibrator with a pre-defined delay or some other suitable circuit.

[0088] By connecting sense lines 221 and 222 with opposite polarity to the transistor detection circuits a window detector may be provided to detect positive and negative transient currents using a simple circuit employing only two transistors without using a bridge rectifier or a negative power supply.

[0089] Methods and processes described herein may be embodied in, and partially or fully automated via, software code modules executed by one or more general and/or special purpose computers. The word "module" refers to logic embodied in hardware and/or firmware, or to a collection of software instructions,

possibly having entry and exit points, written in a programming language, such as, for example, C or C++. A software module may be compiled and linked into an executable program, installed in a dynamically linked library, or may be written in an interpreted programming language such as, for example, BASIC, Perl, or Python. It will be appreciated that software modules may be callable from other modules or from themselves, and/or may be invoked in response to detected events or interrupts. Software instructions may be embedded in non-volatile memory, such as an erasable programmable read-only memory (EPROM). It will be further appreciated that hardware modules may comprise connected logic units, such as gates, flip-flops and/or application specific integrated circuits, and/or may comprise programmable units, such as programmable gate arrays and/or processors. The modules described herein can be implemented as software modules, but also may be represented in hardware and/or firmware. Moreover, although in some embodiments a module may be separately compiled, in other embodiments a module may represent a subset of instructions of a separately compiled program and may not have an interface available to other logical program units.

[0090] In certain embodiments, code modules may be implemented and/or stored in any type of computer-readable medium or other computer storage device. In some systems, data (and/or metadata) input to the system, data generated by the system, and/or data used by the system can be stored in any type of computer data repository, such as a relational database and/or flat file system. Any of the systems, methods, and processes described herein may include an interface configured to permit interaction with users, operators, other systems, components, programs, and so forth.

[0091] It should be emphasized that many variations and modifications may be made to the embodiments described herein, the elements of which are to be understood as being among other acceptable examples. All such modifications and variations are intended to be included herein within the scope of this disclosure and protected by the following claims. Further, nothing in the foregoing disclosure is intended to imply that any particular component, characteristic or process step is necessary or essential.

WHAT IS CLAIMED IS:

1. A respiratory or surgical humidifier comprising:
   a. power supply lines configured to supply power via a supply path to respective output terminals;
   b. a switchable load electrically connected across the output terminals;
   c. a control circuit configured to control switching of the switchable load; and
   d. a sensor that monitors at least one attribute of power supplied via the supply path and provides attribute information to the control circuit,

   wherein the control circuit is configured to control the switchable load to operate in different states and determine operation of the respiratory or surgical humidifier based on the attribute information for the different states.

2. The respiratory or surgical humidifier as claimed in claim 1 wherein the control circuit is configured to control the switchable load to test the respiratory or surgical humidifier whilst power is supplied to a tube heating element electrically connected across the output terminals.

3. The respiratory or surgical humidifier as claimed in claim 1 or claim 2 comprising a power flow controller controlled by the control circuit to vary the level of power supplied via the supply path.

4. The respiratory or surgical humidifier as claimed in claim 3 wherein the power flow controller is a controllable switch in the supply path.

5. The respiratory or surgical humidifier as claimed in claim 3 or claim 4 wherein the control circuit controls state combinations of the switchable load and

power flow controller to monitor operation of the respiratory or surgical humidifier based on the attribute information for the different state combinations.

6. The respiratory or surgical humidifier as claimed in any one of the preceding claims wherein the switchable load comprises a controllable switch and an impedance.

7. The respiratory or surgical humidifier as claimed in claim 6 wherein the controllable switch comprises a semiconductor switch.

8. The respiratory or surgical humidifier as claimed in claim 6 or claim 7 wherein the impedance comprises a resistor.

9. The respiratory or surgical humidifier as claimed in claim 6 or claim 7 wherein the impedance comprises a reactive impedance.

10. The respiratory or surgical humidifier as claimed in any one of the preceding claims comprising a voltage sensor across the power supply lines.

11. The respiratory or surgical humidifier as claimed in claim 10 wherein the attribute information comprises the voltage across the power supply lines.

12. The respiratory or surgical humidifier as claimed in any one of the preceding claims wherein the sensor comprises a current sensor.

13. The respiratory or surgical humidifier as claimed in claim 12 wherein the sensor comprises an inductive, Hall effect or shunt resistance-based sensor.

14. The respiratory or surgical humidifier as claimed in claim 13 wherein the attribute information comprises the current flowing in the supply path.

15. The respiratory or surgical humidifier as claimed in any one of claims 12 to claim 14 wherein the control circuit is configured to switch the power flow controller on whilst the switchable load is switched off and receive current information from the current sensor representing a first current level.

16. The respiratory or surgical humidifier as claimed in claim 15 wherein the control circuit is configured to detect an absence of a tube heating element or an error if the first current level is outside a permitted range.

17. The respiratory or surgical humidifier as claimed in claim 15 or claim 16 wherein the control circuit is configured to switch the power flow controller on whilst the switchable load is switched on and receive current information from the current sensor representing a second current level.

18. The respiratory or surgical humidifier as claimed in claim 17 wherein the control circuit is configured to detect an error if the difference between the first and second current levels is outside a permitted range.

19. The respiratory or surgical humidifier as claimed in claim 17 wherein the control circuit is configured to detect an error if the difference between the first current level and an expected first current level or the difference between the second current level and an expected second current level is outside a permitted range.

20. The respiratory or surgical humidifier as claimed in claim 18 or 19 wherein the expected first current level, expected second current level or the permitted range for the difference between the first and second current levels are determined on the basis of a voltage level across the output terminals and a switchable load impedance and a tube heating element impedance.

21. The respiratory or surgical humidifier as claimed in any one of claims 18 to 20 wherein the permitted current range is a permitted current level plus or minus a margin of error.

22. The respiratory or surgical humidifier as claimed in any one of claims 19 to 21 wherein the control circuit is configured to detect a fault if neither the first or second current is above a minimum threshold level.

23. The respiratory or surgical humidifier as claimed in any one of the preceding claims wherein the control circuit is configured to receive current information from the current sensor when the power flow controller is switched off and the switchable load is switched on, and detect a fault if the current is above a low current threshold level.

24. The respiratory or surgical humidifier as claimed in any one of the preceding claims comprising a transient current detector in the supply path.

25. The respiratory or surgical humidifier as claimed in claim 24 wherein the transient current detector comprises a pair of transistors configured to detect positive or negative transient voltages across an inductor in the supply path.

26. The respiratory or surgical humidifier as claimed in claim 24 or 25 wherein the control circuit turns the power flow controller off if transient currents outside a permitted range are detected.

27. The respiratory or surgical humidifier as claimed in any one of the preceding claims wherein the control circuit comprises a microprocessor.

28. The respiratory or surgical humidifier as claimed in any one of the preceding claims comprising a tube heating element electrically connected across the output terminals, in parallel with the switchable load.

29. A respiratory or surgical humidifier comprising:
    a. a power flow controller configured to control power supplied via a supply path to respective output terminals;
    b. a switchable load electrically connected across the output terminals;
    c. a current sensor that monitors current supplied via the supply path to develop current information; and
    d. a control circuit configured to
        i. receive the current information from the current sensor;
        ii. control the power flow controller to supply power via the output terminals; and
        iii. control switching of the switchable load;

wherein the control circuit is configured to:

switch the power flow controller on whilst the switchable load is switched off and receive current information from the current sensor representing a first current level;

switch the power flow controller on whilst the switchable load is switched on and receive current information from the current sensor representing a second current level; and

determine operation of the respiratory humidifier based on at least the first and second current levels.

30. A respiratory or surgical humidifier comprising:
    a. power supply lines configured to supply power via a supply path to respective output terminals;
    b. a switchable load electrically connected across the output terminals;
    c. a current sensor that monitors current supplied via the supply path to develop current information; and
    d. a control circuit configured to
        i. receive the current information from the current sensor; and
        ii. control switching of the switchable load;

wherein the control circuit is configured to:

i. switch the switchable load off and receive current information from the current sensor representing a first current level;

ii. switch the switchable load on and receive current information from the current sensor representing a second current level; and

iii. detect an error if the difference between the first and second current levels is outside a permitted range.

31. A respiratory or surgical humidifier comprising:

a. a power flow controller configured to supply power via a supply path to respective output terminals;

b. a switchable load electrically connected across the output terminals;

c. a current sensor that monitors current supplied via the supply path to develop current information; and

d. a control circuit configured to:

i. receive the current information from the current sensor;

ii. control switching of the power flow controller to supply power via the output terminals; and

iii. control switching of the switchable load;

wherein the control circuit is configured to:

i. switch the power flow controller on whilst the switchable load is switched off and receive current information from the current sensor representing a first current level;

ii. switch the power flow controller on whilst the switchable load is switched on and receive current information from the current sensor representing a second current level;

iii. detect an error if the second current level is outside a permitted range; and

iv. detect an error if the difference between the first and second current levels is outside a permitted range.

32. A respiratory or surgical humidifier comprising:
    a. a power flow controller configured to supply power via a supply path to respective output terminals;
    b. a switchable load electrically connected across the output terminals;
    c. a current sensor that monitors current supplied via the supply path to develop current information; and
    d. a control circuit configured to:
        i. receive the current information from the current sensor;
        ii. control switching of the power flow controller to supply power via the output terminals; and
        iii. control switching of the switchable load;

    wherein the control circuit is configured to:
        i. switch the power flow controller on whilst the switchable load is switched on and receive current information from the current sensor representing a test current level; and
        ii. detect an error if the test current level is outside a permitted range.

33. A respiratory or surgical humidifier comprising:
    a. a power flow controller configured to control power supplied via a supply path to respective output terminals;
    b. a switchable load electrically connected across the output terminals; and
    c. a control circuit configured to control the switchable load whilst the power flow controller supplies power to the output terminals to perform in use monitoring of the respiratory or surgical humidifier.

34. A respiratory or surgical humidifier as claimed in any one of the preceding claims comprising:

a. a housing configured to receive a humidifier chamber;
b. a heater plate configured to transfer heat to a humidifier chamber when received by the housing;
c. a heater element configured to heat the heater plate; and
d. a power controller configured to control a level of power supplied to the heater element.

35. A method of monitoring the operation of a respiratory or surgical humidifier having output terminals for supplying power to a tube heating element of a humidifier supply tube, the method comprising temporarily connecting a dummy load across the output terminals whilst power is supplied to the tube heating element and evaluating one or more power supply attributes to monitor correct operation of the respiratory humidifier.

36. A method as claimed in claim 35 wherein an error in the operation of the respiratory or surgical humidifier is detected if a current supplied via the output terminals is below a threshold value.

37. A method as claimed in claim 35 or claim 36 wherein a first current supplied via the output terminals is measured when the dummy load is not connected across the output terminals and a second current supplied via the output terminals is measured when the dummy load is electrically connected across the output terminals and an error in the operation of the respiratory or surgical humidifier is detected if the difference between the first and second currents is outside a permitted range.

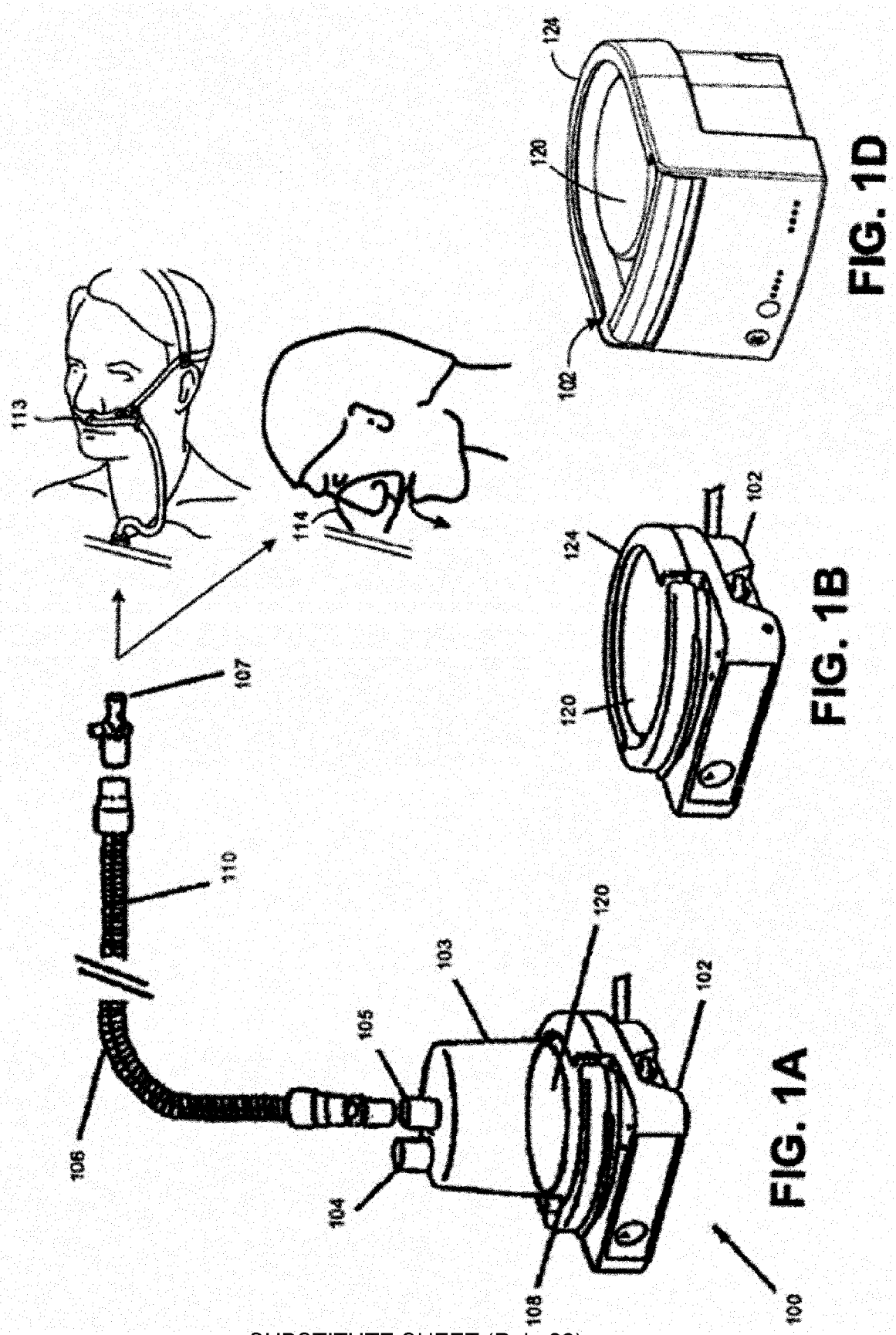

FIG. 1D

FIG. 1B

FIG. 1A

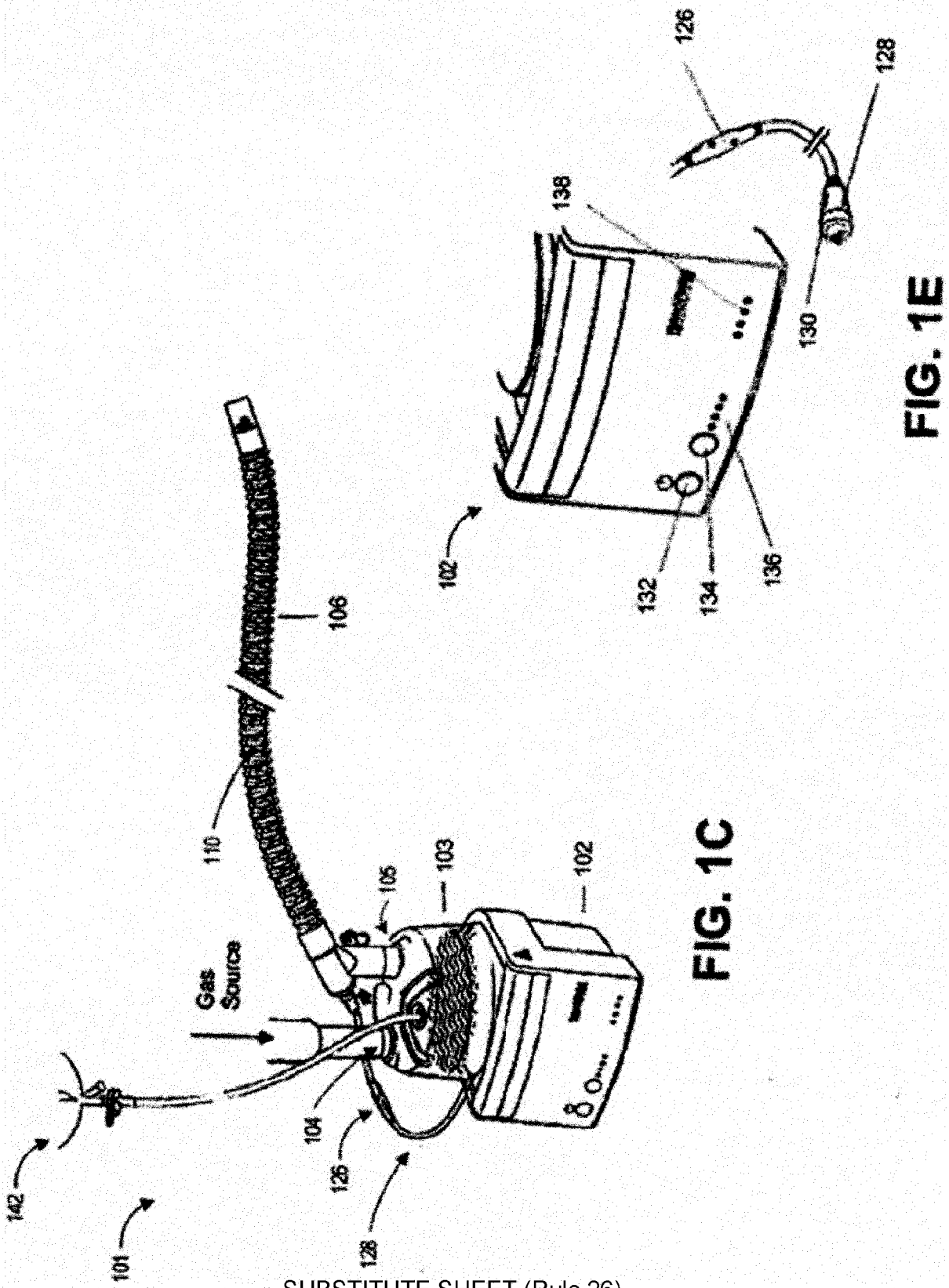
126
128
138
130
102
132
134
136
106
110
103
105
102
Gas Source
104
126
128
142
101

FIG. 1E

FIG. 1C

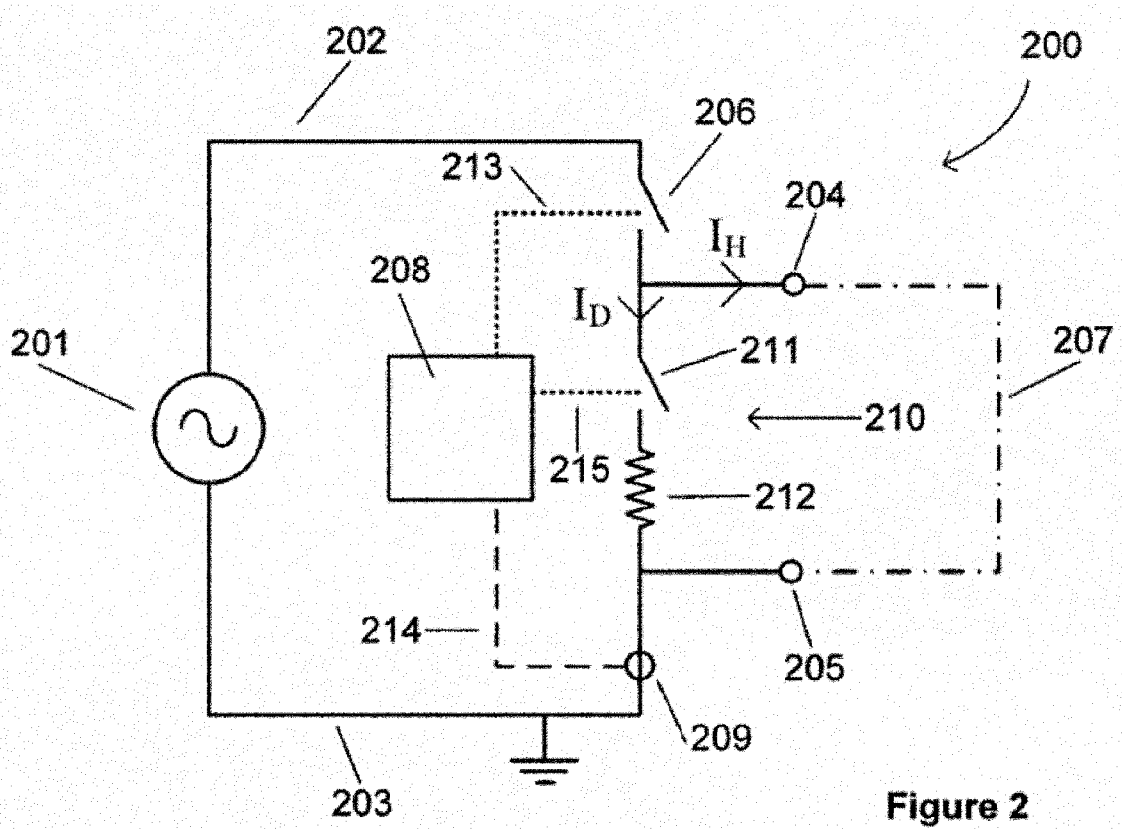

Figure 2

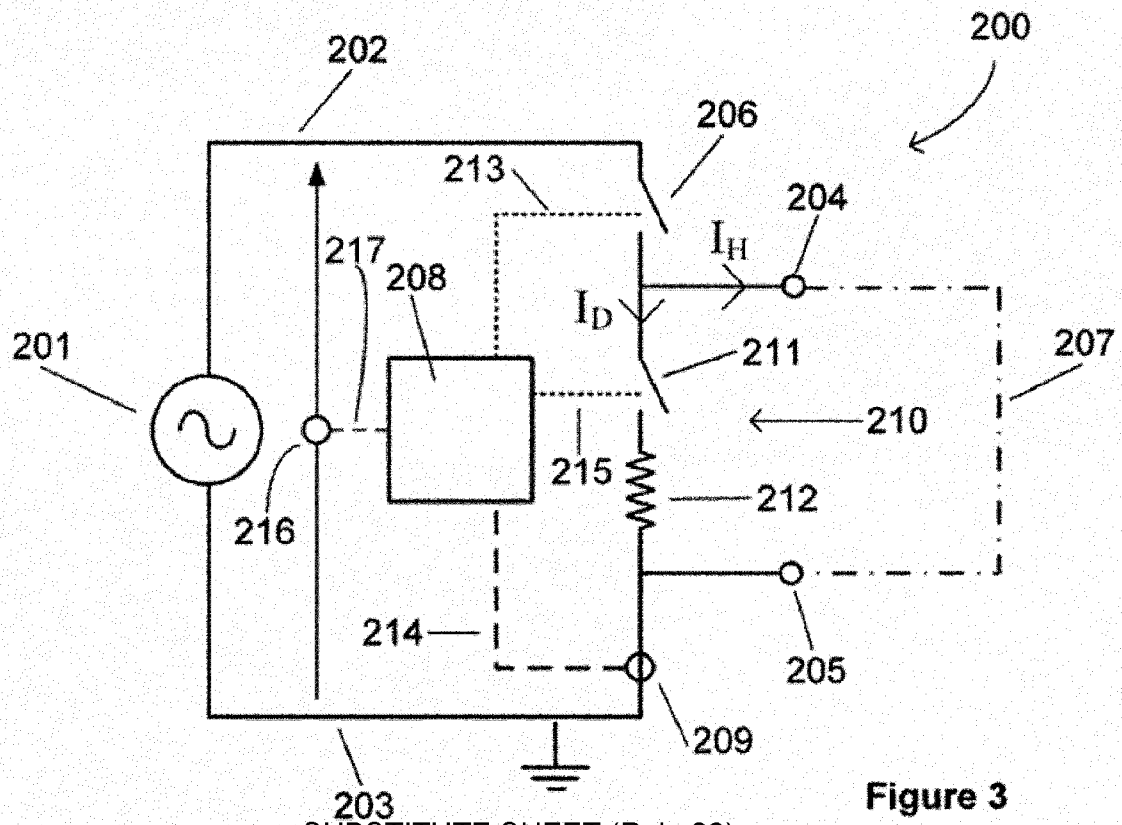

Figure 3

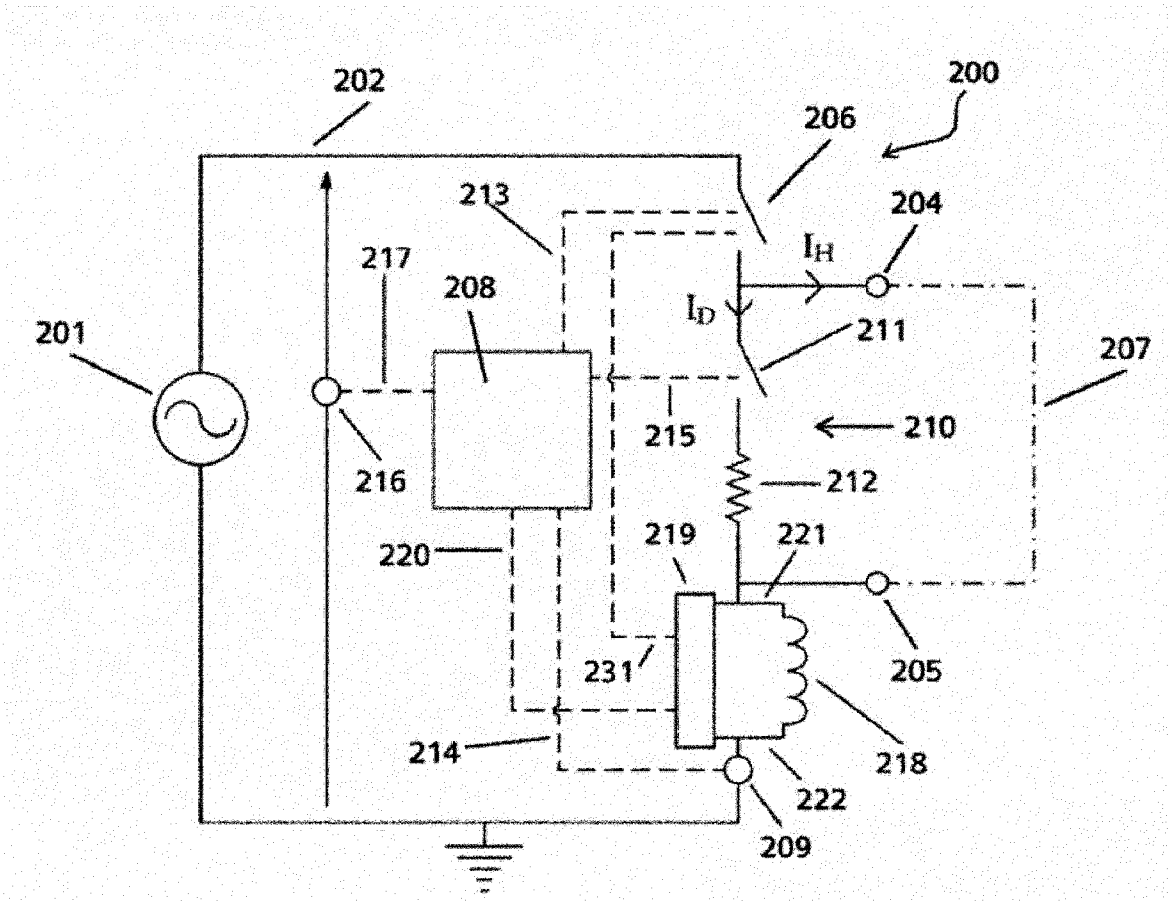
202
200
206
213
204
I_H
217
208
I_D
211
201
207
215
210
216
212
220
219
221
231
205
214
218
222
209

Figure 4

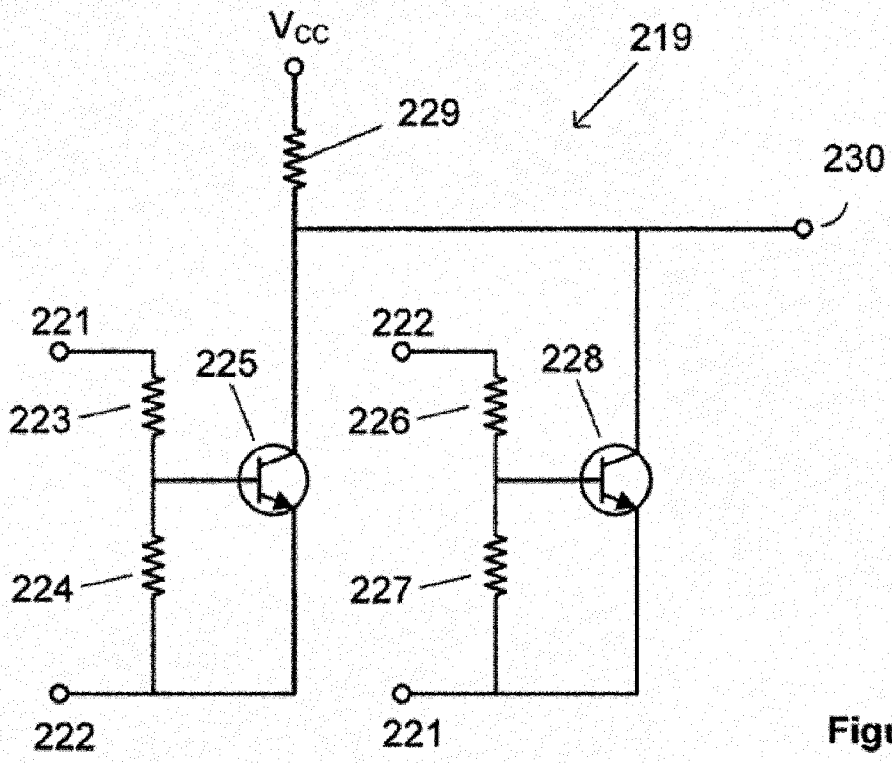

Figure 5

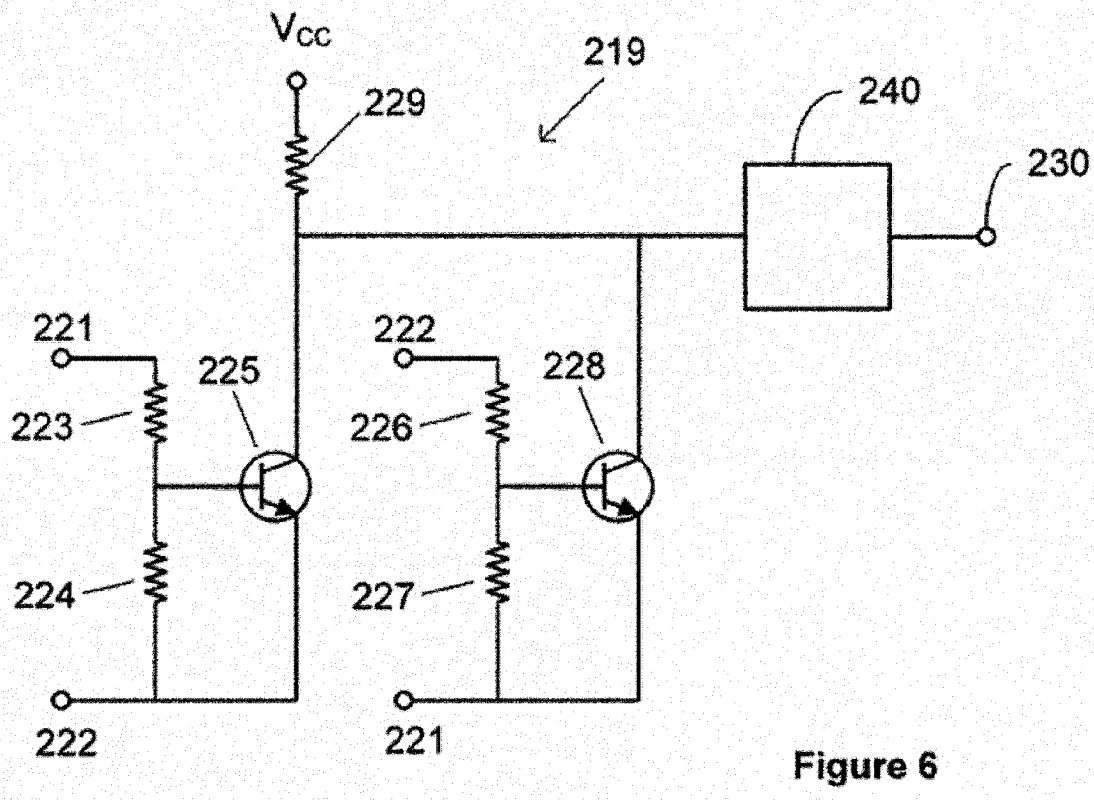

Figure 6

INTERNATIONAL SEARCH REPORT

International application No.
PCT/NZ2021/050013

A. CLASSIFICATION OF SUBJECT MATTER

G01R 31/28 (2006.01) A61M 16/16 (2006.01)

According to International Patent Classification (IPC) or to both national classification and IPC

B. FIELDS SEARCHED

Minimum documentation searched (classification system followed by classification symbols)

Documentation searched other than minimum documentation to the extent that such documents are included in the fields searched

Electronic data base consulted during the international search (name of data base and, where practicable, search terms used)

Searched Database PATENW with IPC and CPC symbols G01R31/C/IC/LOW, G05B19/045/C/IC/LOW, G05B23/0218/C/IC/LOW, A61M16/C/IC/LOW, A61M16/16/C/IC/LOW, A61M16/08/C/IC/LOW, A61M16/10/C/IC/LOW, A61M16/06/C/IC/LOW and keywords: controller, current, electric, voltage, power, sensor, switch, load, resistor, fault, and other similar terms.

Searched Google Patents, Google Web, Google Scholar and Google Images with similar keywords as above.

Applicant(s)/Inventor(s) name searched in DOCDB, DWPI and internal databases provided by IP Australia.

C. DOCUMENTS CONSIDERED TO BE RELEVANT

Category*	Citation of document, with indication, where appropriate, of the relevant passages	Relevant to claim No.
	Documents are listed in the continuation of Box C	

[X] Further documents are listed in the continuation of Box C

[X] See patent family annex

* Special categories of cited documents:

"A" document defining the general state of the art which is not considered to be of particular relevance

"D" document cited by the applicant in the international application

"E" earlier application or patent but published on or after the international filing date

"L" document which may throw doubts on priority claim(s) or which is cited to establish the publication date of another citation or other special reason (as specified)

"O" document referring to an oral disclosure, use, exhibition or other means

"P" document published prior to the international filing date but later than the priority date claimed

"T" later document published after the international filing date or priority date and not in conflict with the application but cited to understand the principle or theory underlying the invention

"X" document of particular relevance; the claimed invention cannot be considered novel or cannot be considered to involve an inventive step when the document is taken alone

"Y" document of particular relevance; the claimed invention cannot be considered to involve an inventive step when the document is combined with one or more other such documents, such combination being obvious to a person skilled in the art

"&" document member of the same patent family

Date of the actual completion of the international search	Date of mailing of the international search report
7 May 2021	07 May 2021
Name and mailing address of the ISA/AU	**Authorised officer**
AUSTRALIAN PATENT OFFICE PO BOX 200, WODEN ACT 2606, AUSTRALIA Email address: pct@ipaustralia.gov.au	Shuchin Taher AUSTRALIAN PATENT OFFICE (ISO 9001 Quality Certified Service) Telephone No. +61262832862

INTERNATIONAL SEARCH REPORT

International application No.
PCT/NZ2021/050013

Box No. II Observations where certain claims were found unsearchable (Continuation of item 2 of first sheet)

This international search report has not been established in respect of certain claims under Article 17(2)(a) for the following reasons:

1. ☐ Claims Nos.:
because they relate to subject matter not required to be searched by this Authority, namely:
the subject matter listed in Rule 39 on which, under Article 17(2)(a)(i), an international search is not required to be carried out, including

2. ☐ Claims Nos.:
because they relate to parts of the international application that do not comply with the prescribed requirements to such an extent that no meaningful international search can be carried out, specifically:

3. ☐ Claims Nos:
because they are dependent claims and are not drafted in accordance with the second and third sentences of Rule 6.4(a)

Box No. III Observations where unity of invention is lacking (Continuation of item 3 of first sheet)

This International Searching Authority found multiple inventions in this international application, as follows:

See Supplemental Box for Details

1. ☐ As all required additional search fees were timely paid by the applicant, this international search report covers all searchable claims.
2. ☐ As all searchable claims could be searched without effort justifying additional fees, this Authority did not invite payment of additional fees.
3. ☐ As only some of the required additional search fees were timely paid by the applicant, this international search report covers only those claims for which fees were paid, specifically claims Nos.:
4. ☒ No required additional search fees were timely paid by the applicant. Consequently, this international search report is restricted to the invention first mentioned in the claims; it is covered by claims Nos.:
1-34

Remark on Protest

☐ The additional search fees were accompanied by the applicant's protest and, where applicable, the payment of a protest fee.

☐ The additional search fees were accompanied by the applicant's protest but the applicable protest fee was not paid within the time limit specified in the invitation.

☐ No protest accompanied the payment of additional search fees.

INTERNATIONAL SEARCH REPORT C (Continuation). DOCUMENTS CONSIDERED TO BE RELEVANT		International application No. **PCT/NZ2021/050013**
Category*	Citation of document, with indication, where appropriate, of the relevant passages	Relevant to claim No.
X	US 2014/0216459 A1 (RESMED LIMITED) 07 August 2014 See the whole document, in particular, the abstract, fig. 20, para. 0094-0098, 0106, 0174.	1-34
A	US 8416546 B2 (ARNDT et al.) 09 April 2013 See the whole document.	
A	US 9952286 B2 (MITSUBISHI ELECTRIC CORPORATION) 24 April 2018 See the whole document.	

Supplemental Box

Continuation of: **Box III**

This International Application does not comply with the requirements of unity of invention because it does not relate to one invention or to a group of inventions so linked as to form a single general inventive concept.

This Authority has found that there are different inventions based on the following features that separate the claims into distinct groups:

• Claims 1-34 are directed to a respiratory or surgical humidifier. The features of "*a power flow controller configured to control power supplied via a supply path to respective output terminals*", "*a switchable load electrically connected across the output terminals*" and "*a control circuit configured to control the switchable load whilst the power flow controller supplies power to the output terminals to perform monitoring of the respiratory or surgical humidifier*" are specific to this group of claims.

• Claims 35-37 are directed to a method of monitoring the operation of a respiratory or surgical humidifier. The features of "*having output terminals for supplying power to a tube heating element of a humidifier supply tube*" and "*temporarily connecting a dummy load across the output terminals whilst power is supplied to the tube heating element and evaluating one or more power supply attributes to monitor correct operation of the respiratory humidifier*" are specific to this group of claims.

PCT Rule 13.2, first sentence, states that unity of invention is only fulfilled when there is a technical relationship among the claimed inventions involving one or more of the same or corresponding special technical features. PCT Rule 13.2, second sentence, defines a special technical feature as a feature which makes a contribution over the prior art.

When there is no special technical feature common to all the claimed inventions there is no unity of invention.

In the above groups of claims, the identified features may have the potential to make a contribution over the prior art but are not common to all the claimed inventions and therefore cannot provide the required technical relationship. The only features common to all of the claims and which provides a technical relationship among them are considered to be generic in this area of technology. Thus there is no special technical feature common to all the claimed inventions and the requirements for unity of invention are consequently not satisfied *a priori*.

INTERNATIONAL SEARCH REPORT Information on patent family members	International application No. **PCT/NZ2021/050013**

This Annex lists known patent family members relating to the patent documents cited in the above-mentioned international search report. The Australian Patent Office is in no way liable for these particulars which are merely given for the purpose of information.

Patent Document/s Cited in Search Report		Patent Family Member/s	
Publication Number	**Publication Date**	**Publication Number**	**Publication Date**
US 2014/0216459 A1	07 August 2014	US 2014216459 A1	07 Aug 2014
		US 9572949 B2	21 Feb 2017
		EP 2775277 A2	10 Sep 2014
		EP 2775277 B1	31 May 2017
		EP 3244178 A1	15 Nov 2017
		EP 3244178 B1	03 Jun 2020
		EP 3779385 A1	17 Feb 2021
		NZ 620523 A	28 Aug 2015
		NZ 710078 A	27 Jan 2017
		NZ 727820 A	29 Jun 2018
		NZ 743034 A	20 Dec 2019
		US 2017113009 A1	27 Apr 2017
		US 10363382 B2	30 Jul 2019
		US 2019290866 A1	26 Sep 2019
US 8416546 B2	09 April 2013	US 2009309607 A1	17 Dec 2009
		US 8416546 B2	09 Apr 2013
		CN 101490571 A	22 Jul 2009
		CN 101490571 B	06 Feb 2013
		DE 102006045308 A1	27 Mar 2008
		EP 2069811 A1	17 Jun 2009
		WO 2008037510 A1	03 Apr 2008
US 9952286 B2	24 April 2018	US 2016061896 A1	03 Mar 2016
		US 9952286 B2	24 Apr 2018
		CN 105229885 A	06 Jan 2016
		CN 105229885 B	09 Jun 2017
		JP 5615470 B1	29 Oct 2014
		JP WO2015140909 A1	06 Apr 2017
		KR 20150132597 A	25 Nov 2015
		KR 101630140 B1	13 Jun 2016
		TW 201537326 A	01 Oct 2015
		TW I534579 B	21 May 2016
		WO 2015140909 A1	24 Sep 2015

End of Annex

Due to data integration issues this family listing may not include 10 digit Australian applications filed since May 2001.