Sept. 13, 1955 F. T. BUSCH 2,717,717

SCOURING PAD HOLDER

Filed June 16, 1952

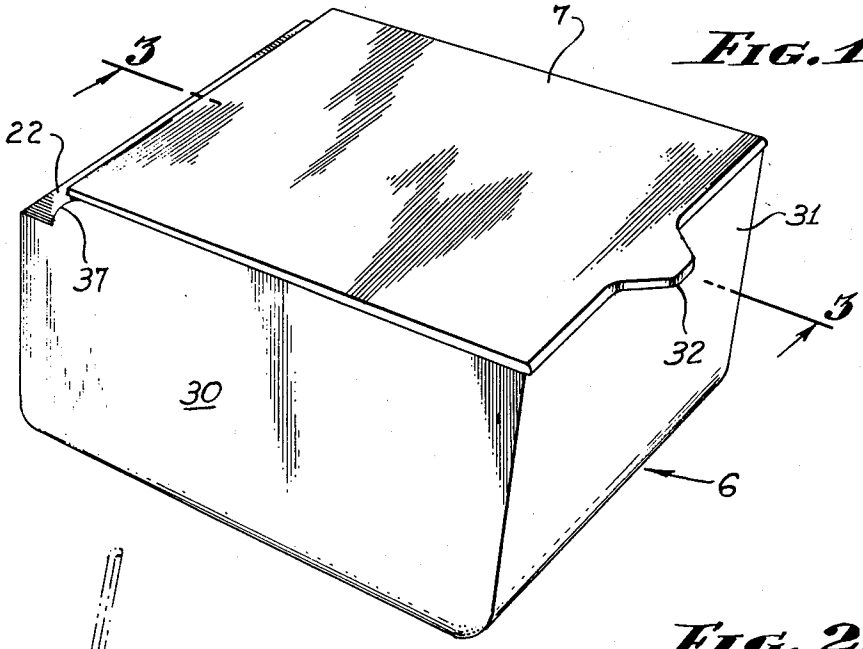

FIG. 1.

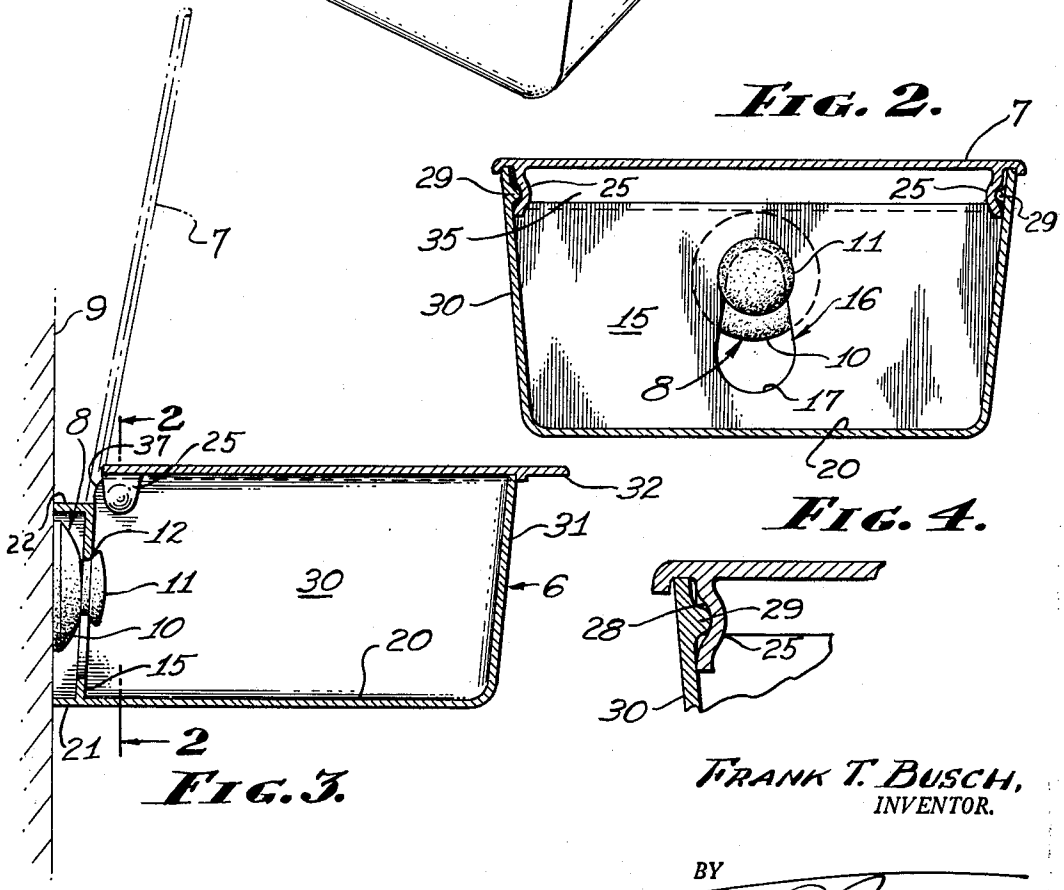

FIG. 3.

FIG. 4.

FIG. 2.

FRANK T. BUSCH,
INVENTOR.

BY

ATTORNEY

United States Patent Office 2,717,717 Patented Sept. 13, 1955

2,717,717

SCOURING PAD HOLDER

Frank T. Busch, Los Angeles, Calif.

Application June 16, 1952, Serial No. 293,805

2 Claims. (Cl. 220—18)

This invention relates primarily to an improved scouring pad holder, but the embodiment thereof hereinafter described may also be advantageously used as a container for a variety of other articles besides scouring pads.

A considerable number of scouring pads of different makes are now in general use, among them the "Dolly Duzit," "S O S" and "Chore Boy" brands. All these various scouring pads, after use, present an untidy appearance when left in an uncovered condition. Also some of them have to be impregnated with substances injurious to paints, and therefore, should be kept in a suitable container where they will dry out, rather than placed upon shelves, window sills, or other exposed areas when not in use.

It is an object of this invention to provide an improved container for all types of scouring pads, which will efficiently meet the requirements of the good housekeeper by enabling her to keep her scouring pads out of sight and yet in a situation wherein they cannot injure paint and are instantly accessible for use.

Among more specific objects of the invention are: to provide a simplified means for detachably securing the scouring pad container to the wall of a room, so that it can readily be transferred from one room to another, whenever desired; to provide an otherwise open-topped scouring pad container with an improved cover which can be readily detached for being cleaned and to afford an unobstructed access to the interior of the body portion of the container for its cleansing; and to provide a knobless cover that will normally gravitate to a closed position, but which can be readily swung upwardly to an open position by upward pressure from the same hand of the operator as is being used to deposit a scouring pad into the container.

Also it is a specific object of the invention to provide, for mounting upon a vacuum cup, pneumatically adhered to a vertical wall, an improved alcove structure for the rear side of a scouring pad box, which alcove structure, when mounted upon the wall-supported vacuum cup, will house in the latter and will also abut the wall and support the container portion of the device with its bottom and cover extending horizontally.

Other objects, advantages and features of invention will hereinafter appear.

Referring to the accompanying drawing, which illustrates a preferred, reduced to practice embodiment of the invention,

Fig. 1 is a perspective view of the device.

Fig. 2 is a vertical section on line 2—2 of Fig. 3.

Fig. 3 is a vertical section on line 3—3 of Fig. 1.

Fig. 4 is an enlarged, fragmentary, cross sectional view of a corner portion of the device.

Referring in detail to the drawing, the embodiment of the invention therein illustrated comprises three main parts, a box structure **6**, lid **7**, and an elastic vacuum cup **8** which in Fig. 3, is shown applied to a wall **9** and utilized to support said box in an abutting relation to said wall.

Said vacuum cup, by preference and as shown, is of

a circular, symmetrical type. It has a concavo-convex body portion **10**, a circular, flattened head **11** and a contracted neck portion **12** whereby said head and body are axially secured to each other.

The box structure **6**, preferably molded out of plastic, is provided with a back wall **15** provided, centrally of its horizontal dimension, with a vertical slot **16** which is narrowest across its upper part, said slot being tapered upwardly from a wider, arcuate lower end portion **17**, the upper end of said slot also preferably being arcuate, as indicated, where concealed in Fig. 2, by broken lines.

The lower end portion **17** of said slot is dimensioned to receive the aforesaid circular head **11** of the cup body **10**, so that the user of the device may, after applying the vacuum cup to the wall **9**, place the slot portion **17** back of said head **11** and then lower the box **6** till the narrower, upper end portion of the slot **16** fits around the cup's neck **12**, so that the head **11** securely maintains the box in its mounted position. Holding said box in a correctly mounted position is accomplished, in part, by providing the floor **20** of the box with a rearward extension **21** and by providing the upper part of the body with a rearward extension **22**, these two extensions projecting rearwardly of the body portion of the box to the right distances to cause the slotted back wall **15** of the mounted box to be maintained in substantial registry with the neck **12** of the vacuum cup, as shown in Fig. 3.

The box structure includes side walls **30** along with the already mentioned lid or cover **7**, which is provided with depending rear corner ears **25**, the outer side of each of these ears being recessed or indented at **28** to receive a boss **29** projecting interiorly from the rear part of the upper edge portion of the adjacent side wall **30** of the box. By this arrangement the cover is conveniently swingably attached to the body portion of the box, and by the inspringing of said ears may be manually removed therefrom and reattached thereto, facilitating cleaning of said cover and box body. The box structure is completed by a front wall **31**, over which the free edge of the closed lid extends slightly, where it is provided with a fingerlift extension **32**.

The rear portions of the side walls **30** co-operate with the aforesaid rearwardly projecting, horizontally elongated, wall portions **21** and **22** to form an alcove which houses in the body portion **10** of the vacuum cup which supports the box structure. The slotted back wall **15** of the box body forms the bottom of this alcove, and said wall **15** is slightly inclined outwardly from bottom to top so that, when applying the box body to the neck and head of the vacuum cup, the downward movement of the slotted part of the wall **15** causes said wall to be wedged in back of said head, thus clamping the mounted box body in a firmly abutted relation to the wall.

The box **6** will commonly be used to contain scouring pads used in the kitchen, and it is desirable that it be well ventilated to allow such pads to dry out after being used. Accordingly the cover **7** and upper part of the box are so constructed as completely to conceal the contained, unsightly scouring pads and yet to allow the air to freely enter and dry them. Hence, even when the cover is closed, an air admission slot **35** (see Fig. 2) intervenes between the top edge of the back wall **15** and the rear portion of the cover.

It will be observed that, when the device is attached to a wall in the manner illustrated in Fig. 3, the top wall of the alcove structure which houses in the vacuum cup forms a stop which prevents the lid **7** from swinging rearwardly beyond the center of gravity.

The rear upper corner of each side wall **30** of the box is rounded at **37** so that there will be no sharp corner to obstruct the backswing of the cover. The pivotal mounting of said cover ears **25** upon the aforesaid bosses

29 so positions said cover that its backswing is arrested by the rear edge of the cover coming into contact with the ledge formed by the aforesaid rearward extension 22 carried by the upper part of the back wall 15 of the box, slightly before said cover reaches the center of gravity. Therefore said cover after being opened normally gravitates to closed position, in readiness to be opened by upward pressure of the operator's finger against the aforesaid fingerlift 32.

I claim:

1. A device for holding moist articles to be dried comprising a box structure having front and rear walls, side walls and a floor, said rear wall being shorter in height than said side walls, said box structure having adjacent the front thereof an article holding portion enclosed within said front and rear walls, side walls and floor, a lid extending over the top of said article holding portion, said lid disposed adjacent the top of said side walls and above the top of said rear wall, said lid adapted to be moved to provide access to said article holding portion, said box structure having an open space between said side walls from the top of said rear wall to said lid to permit air to enter said article holding portion and dry articles contained therein, said open space being entirely concealed from sight from the front or sides of said box, said side walls and floor extending rearwardly beyond said rear wall to form a mounting portion within said box structure directly behind said article holding portion, a top extending rearwardly from the top of said rear wall between said side walls to form a cover over said mounting portion, said rear wall having a keyhole slot therein, a vacuum cup removably mounted in said keyhole slot, said vacuum cup adapted to be attached to a smooth surface by rearward pressure being exerted on said box structure, said vacuum cup and mounting portion comprising a mounting means for said device which is entirely concealed from sight when said box is in attached position.

2. A device for holding moist articles to be dried comprising a box structure having front and rear walls, side walls and a floor, said rear wall being shorter in height than said side walls, said box structure having adjacent the front thereof an article holding portion enclosed within said front and rear walls, side walls and floor, a lid extending over the top of said article holding portion, said lid disposed adjacent the top of said side walls and above the top of said rear wall, said lid adapted to be moved to provide access to said article holding portion, said side walls and floor extending rearwardly beyond said rear wall to form a mounting portion within said box structure directly behind said article holding portion, a top extending rearwardly from the top of said rear wall between said side walls to form a cover over said mounting portion, said rear wall having a keyhole slot therein, a vacuum cup removably mounted in said keyhole slot, said vacuum cup adapted to be attached to a smooth surface by rearward pressure being exerted on said box structure, said vacuum cup and mounting portion comprising a mounting means for said device which is entirely concealed from sight when said box is in attached position.

References Cited in the file of this patent

UNITED STATES PATENTS

641,893	Roberts	Jan. 23, 1900
655,410	Mulkerins	Aug. 7, 1900
1,249,910	Oeginder	Dec. 11, 1917
1,714,884	McConnell	May 28, 1929
1,751,463	Backus et al.	Mar. 25, 1930
1,847,016	Metcalfe	Feb. 23, 1932
1,933,374	Haggard	Oct. 31, 1933
2,011,660	Sparkes	Aug. 20, 1935
2,094,446	Clement	Sept. 28, 1937
2,214,869	West	Sept. 17, 1940
2,286,389	Sowin	June 6, 1942
2,350,463	Kallus	June 6, 1944
2,392,091	Kieft	Jan. 1, 1946
2,428,988	Person	Oct. 14, 1947