D. A. EAKEN.

LIGHT OR VOLTAGE REGULATOR.

APPLICATION FILED DEC. 13, 1915.

1,214,021. Patented Jan. 30, 1917.

Fig. 1

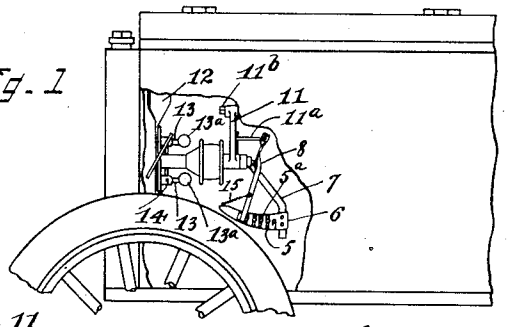

Fig. 2

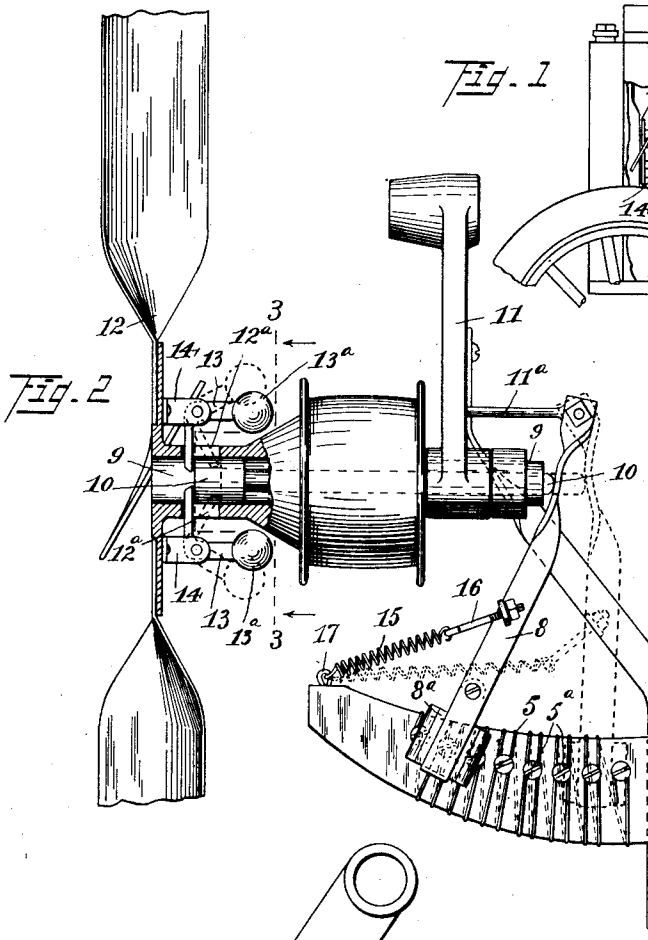

Fig. 3

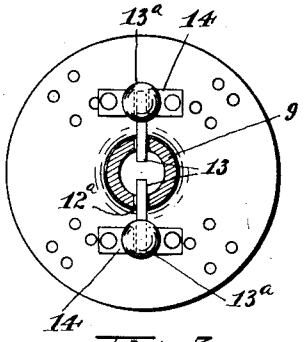

Fig. 4

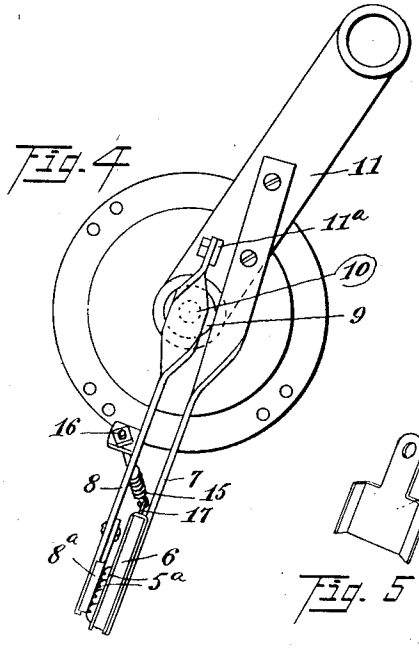

Fig. 5

Fig. 6

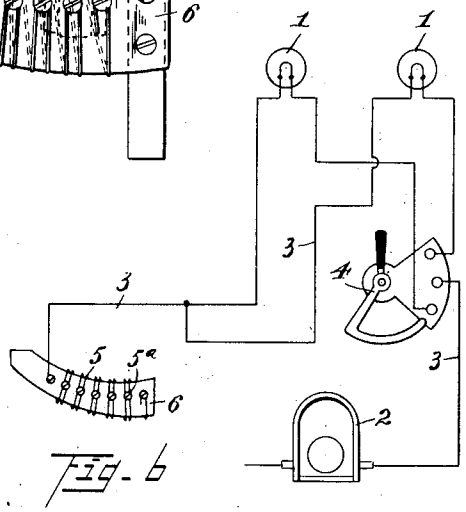

Inventor

D. A. Eaken

by Chas. B. Billman

Attorney

UNITED STATES PATENT OFFICE.

DWIGHT A. EAKEN, OF LODI, OHIO.

LIGHT OR VOLTAGE REGULATOR.

1,214,021. Specification of Letters Patent. Patented Jan. 30, 1917.

Application filed December 13, 1915. Serial No. 66,570.

To all whom it may concern:

Be it known that I, DWIGHT A. EAKEN, a citizen of the United States, residing at Lodi, in the county of Medina and State of Ohio, have invented certain new and useful Improvements in Light or Voltage Regulators, of which the following is a specification.

My invention relates to improvements in light or voltage regulators, the primary object of the invention being to produce a constant voltage with a variable speed, the present embodiment of the invention being particularly designed and adapted for use in connection with the electric lighting system now employed in "Ford" cars embodying a magneto and in which it is desirable to maintain a constant voltage with variable engine speeds, thereby preventing the burning out of the lamps and feeding and maintaining a constant voltage to the lamps thereby causing the same to burn with uniform brilliancy through the maintenance of substantially uniform or constant voltage of current thereto.

A further object is the provision of a generally improved current or voltage regulator for use in connection with an electric lighting system of the character above indicated which may be readily installed in cars now in use (as for example in Ford cars) in connection with conventional devices, as for example, in connection with the fan and its mountings as shown in the present embodiment of the invention.

A further object is the provision of a generally improved device of this class which will be exceedingly simple in construction, cheap of manufacture, and efficient in use.

With the above mentioned and other ends in view, the invention consists in the novel construction, arrangement, and combination of parts, hereinafter described, illustrated in one of its embodiments in the accompanying drawings, and particularly pointed out in the appended claims.

Referring to the drawings forming a part of this specification, Figure 1, is a view of the improved device attached to and embodied in a fan and mounted in an automobile of the Ford type, the conventional form of movable fan supporting arm or bracket, however, being in loosened or suspended position for the purpose of clearer illustration of the parts. Fig. 2, an enlarged detail view of the fan and supporting bracket removed, the dotted lines illustrating the position of the governor and controller parts at high engine speed. Fig. 3, a cross sectional view taken on line 3—3 of Fig. 2. Fig. 4, a rear end view, the fan blades being removed. Fig. 5, a detail detached perspective view of the contact shoe or element carried by the movable or variable spring resisted arm for coöperating with the contact members of the resistance coil. Fig. 6, a diagrammatic view of the lamp circuit wiring in connection with the magneto, switch, and resistance coil.

Similar numerals of reference designate like parts throughout all the figures of the drawings.

As shown in Fig. 6, of the drawings, the lamps 1, are suitably connected to the magneto 2, through suitable wires or conduits 3, a suitable switch 4, being employed, said conduits 3, leading to the resistance coil 5, carried upon an insulating element or bracket 6. The resistance coil is suitably grounded through the machine through the variable contact element or arm hereinafter described and is provided with a plurality or series of contact elements 5^a, suitably mounted upon the insulating element or bracket 6, the latter being suitably mounted on a suitable supporting element or bracket 7.

As a means of providing for a constant voltage with the variable speed, or in other words, of increasing the resistance through the resistance coil 5, with the increase in the speed of the engine and magneto, a spring resisted variable contact element or lever 8, is provided, said lever being suitably actuated through the governor mechanism, hereinafter described, and having its free end slidably arranged in coöperative relation to the contact elements 5, so as to successively make contact with such contact elements as moved to and fro with the variations in the speed of the engine or magneto, it being observed that when the engine or magneto is at low speed the free end of the lever will be in contact with the first contact elements and convolutions of the resistance coil and that the same will be successively moved to successive contact elements and convolutions of the resistance coil as the speed is increased as indicated most clearly in Fig. 2 of the drawings.

As a means of suitably actuating the variable contact element or lever 8, in accord-

ance with the speed of the engine and magneto, a suitable rotating shaft 9, is provided with suitable governor mechanism, and a suitable coöperating plunger or shaft 10, the latter having contact with and being adapted to actuate the variable contact element or lever 8, through the governor mechanism, as hereinafter described.

As a suitable means of adapting the device for ready installation I mount the variable contact element or lever 8, as well as the supporting bracket 7, upon the conventional form of fan supporting arm or bracket 11, carrying the fan 12, such as commonly employed in this class of motor driven vehicles, and the governor actuating plunger 10, is slidably mounted in the fan shaft 9, such governor mechanism, in the present instance, comprising a pair of governor arms 13, mounted in a pair of oppositely arranged and disposed bearing brackets 14, carried on the hub portion of the fan, the free ends of the governor arms being adapted to work in suitable slots 12^a, in cooperative relation to the head of the plunger shaft 10, and the outward movements of the ball portions 13^a, of the governor arms being regulated through the coiled expansion spring 15, the latter being adjustably connected to the variable contact element or lever 8, through the medium of the adjusting bolt and nut 16, the opposite end of the spring 15, being connected to the outer or free ends of the bracket or supporting elements 7, through the medium of the connecting eye or staple 17.

It will be seen that the pivoted portion of the variable contact element or lever 8, extends across the end of the plunger or governor actuated shaft 9, directly at the rear of the fan supporting arm or bracket 11, (see Fig. 4) said variable contact lever 8, being supported, in the present instance, by means of a supporting bracket 11^a, extending rearwardly from the fan supporting arm or bracket 11.

The free end of the variable or movable contact lever 8, is preferably provided with a contact element of shoe 8^a, (see Fig. 5) said contact shoe 8^a, being maintained in constant frictional contact with the contact elements 5^a, of the successive convolutions of the resistance coil 5, through the relative arrangement and connections of the coiled expansion spring 15, as will appear most clearly in Fig. 4 of the drawings, and it will also be observed that the contact elements 5^a, are conveniently formed by means of a series of screws suitably connected with the coils or convolutions of the resistance coil 5, and passing into the insulating element or resistance coil supporting bracket 6.

It will be seen that by embodying the light or voltage regulator in the fan and its mountings, I provide a combined fan and voltage regulator which may be readily attached to automobiles now in use by simply detaching the old fan supporting arm or bracket 11, by loosening the nut 11^b, and removing the old or standard form of fan 12, and substituting my combined fan and voltage regulator and connecting up the electric wires or conduits in a suitable manner. It will also be observed that the successive convolutions of the resistance coil 5, leading to the contact elements 5^a, on the insulating bracket 6, are graduated as to length so that the resistance is gradually increased with the increase in the speed of the fan shaft thereby providing a constant voltage to the lights with the various speeds of the engine and it will also be seen that the resistance coil being located at the rear of the fan is adapted to be cooled by a current from the latter.

From the foregoing description, taken in connection with the accompanying drawings, the operation and advantages of my invention will be readily understood.

Having thus described one of the embodiments of my invention, what I claim and desire to secure by Letters Patent, is,—

1. In a voltage regulator for automobiles, the combination with a rotary shaft, a bracket support for said shaft, and governor mechanism carried by said shaft; of an insulating element mounted on said bracket support and carrying a variable resistance, and a contact element operated by said governor mechanism and adapted to traverse said resistance in accordance with the speed of said shaft.

2. In a voltage regulator for automobiles, an electric circuit including a plurality of lamps and a magneto, a resistance coil in said circuit, a rotary shaft provided with governor mechanism and a fan adapted to cool said resistance coil, and a support for said shaft provided with a spring resisted variable contact element on said support and actuated by said governor mechanism and traversing said resistance coil in accordance with the speed of rotation of said shaft.

3. In a voltage regulator for automobiles, the combination with an electric circuit including a plurality of lamps and a magneto, and a graduated resistance coil having a series of contact elements; of a fan and fan shaft provided with governor mechanism said fan being in front of said resistance coil to cool the latter, a governor actuated plunger in said fan shaft, and a spring resisted variable contact lever in coöperative relation to said plunger and said contact elements of said resistance coil.

4. In a voltage regulator for automobiles, the combination with an electric circuit including a plurality of lamps and a magneto, and a bracket carrying a graduated resistance coil having a series of contact ele-

ments; of a rotary shaft provided with governor mechanism, a bracket support carrying said rotary shaft and first mentioned bracket, a governor actuated plunger in said shaft, and a spring resisted lever contact element operated by said plunger in variable contact with said contact elements of said resistance coil in accordance with the speed of rotation of said shaft.

5. In a light or voltage regulator for automobiles, the combination with a magneto and a pair of lamps arranged in parallel circuit therewith, and a resistance coil provided with a series of contact elements; of a rotary shaft provided with governor mechanism and a fan in front of said resistance coil, a governor actuated plunger in said shaft, and a spring resisted variable contact element in coöperative relation to said plunger and contact elements of said resistance coil.

6. In a voltage regulator for automobiles, a fan and fan shaft, a support for said fan shaft, an insulating bracket mounted on said support at the rear of said fan, and provided with a resistance coil provided with a series of contact elements, a spring resisted lever mounted on said support and having its free end adapted to traverse and make successive contact with said contact elements, a plunger in said fan shaft in coöperative relation to said lever, and governor mechanism on said fan shaft in coöperative relation to said plunger.

7. A voltage regulator for automobiles, comprising a fan and fan shaft, a support for said fan and fan shaft, an insulating element on said support carrying a resistance coil at the rear of said fan, a spring resisted variable contact lever on said support having its free end in contact with and adapted to traverse the coils of said resistance coil, a plunger in said fan shaft adapted to actuate said contact lever, and governor mechanism carried by said fan and fan shaft in coöperative relation to said plunger.

8. In a voltage regulator for automobiles, the combination with a fan and fan support, an insulating bracket mounted on said support at the rear of said fan and provided with a resistance coil and a plurality of contact elements; of a variable contact element carried by said support in coöperative relation to said contact elements, governor mechanism carried by said fan in coöperative relation to said variable contact element, and a spring adjustably connected to said variable contact element whereby to regulate the latter and said governor mechanism.

9. A combined fan and voltage regulator for automobiles, comprising a fan and fan shaft, a support for said fan shaft provided with an insulating bracket carrying a resistance coil at the rear of said fan, said resistance coil being provided with a plurality of contact elements, a spring resisted lever carried by said support in coöperative relation to said contact elements, a plunger in said fan shaft in engagement with said lever, and governor mechanism on said fan connected with said plunger and operating against the resistance of said spring resisted lever whereby the latter is adapted to traverse and make contact with said contact elements in accordance with the speed of rotation of said fan shaft.

In testimony whereof I have affixed my signature in the presence of two witnesses.

DWIGHT A. EAKEN.

Witnesses:
F. H. White,
M. A. Codding.