May 16, 1967 R. E. CORRALL ETAL 3,320,350

REVERSE LAY STRAND

Original Filed July 2, 1962 3 Sheets-Sheet 1

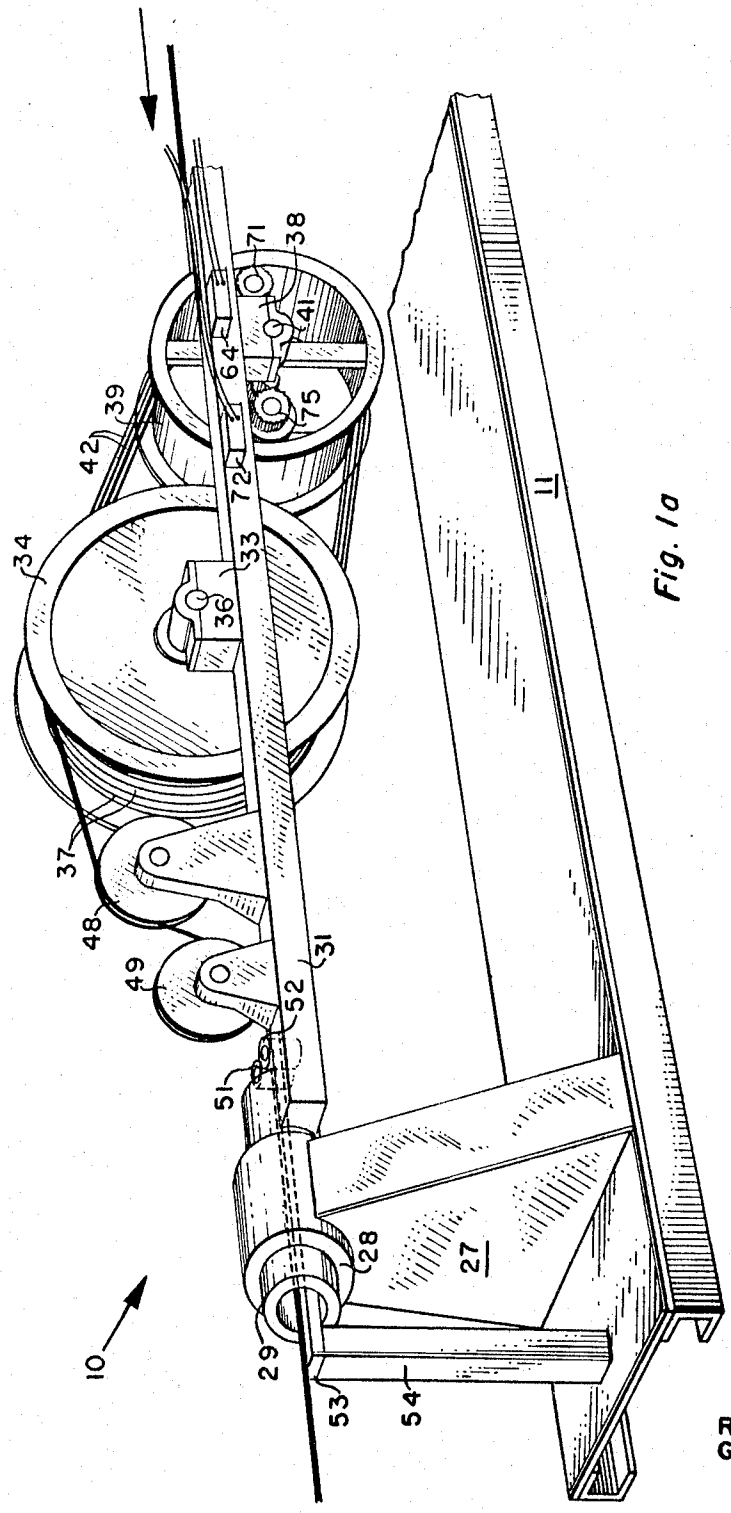

Fig. 1a

INVENTORS
ROY E. CORRALL
GEORGE N. MENASOFF
V. F. Volk
THEIR AGENT

May 16, 1967 R. E. CORRALL ETAL 3,320,350

REVERSE LAY STRAND

Original Filed July 2, 1962 3 Sheets-Sheet 2

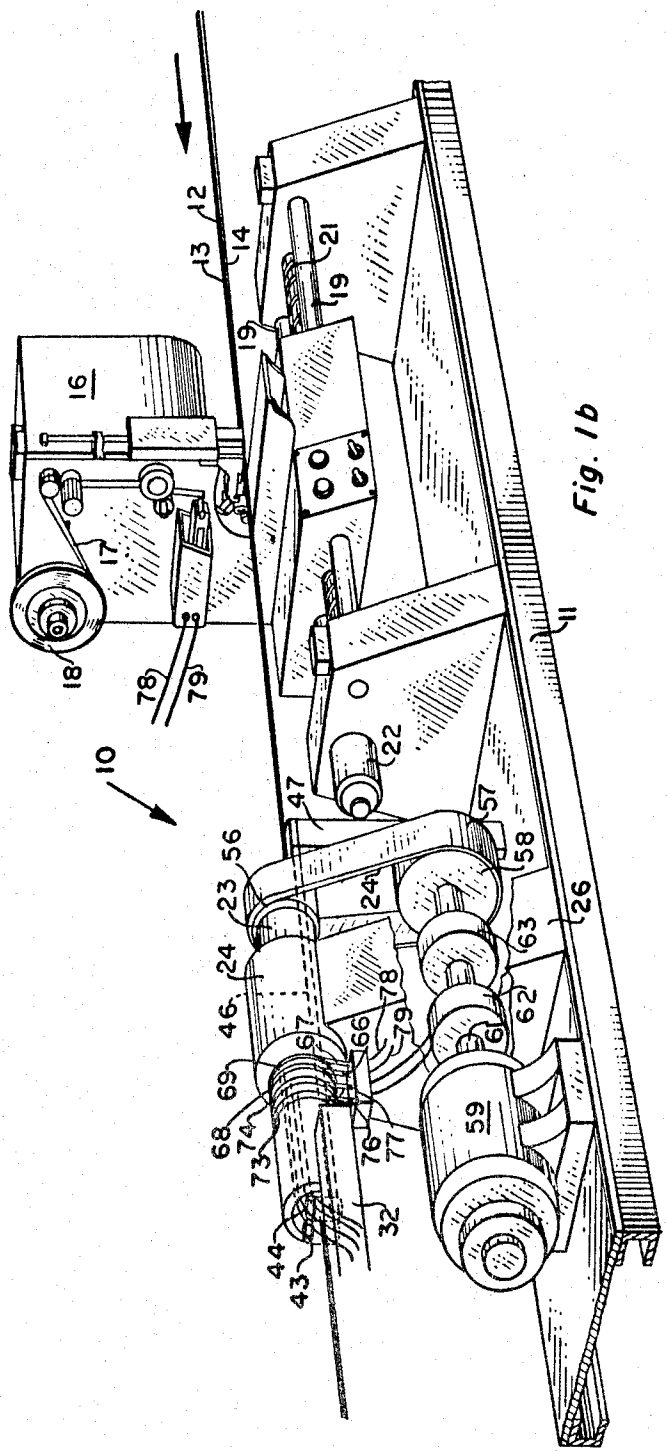

Fig. 1b

INVENTORS
ROY E. CORRALL
GEORGE N. MENASOFF

V. F. Volk

THEIR AGENT

May 16, 1967 R. E. CORRALL ETAL 3,320,350

REVERSE LAY STRAND

Original Filed July 2, 1962 3 Sheets-Sheet 3

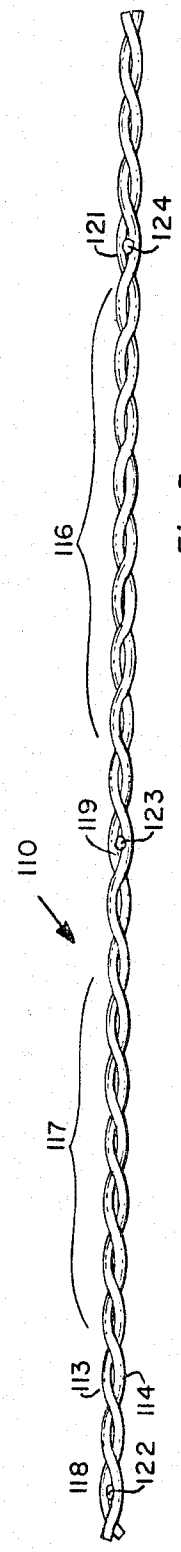

Fig. 3

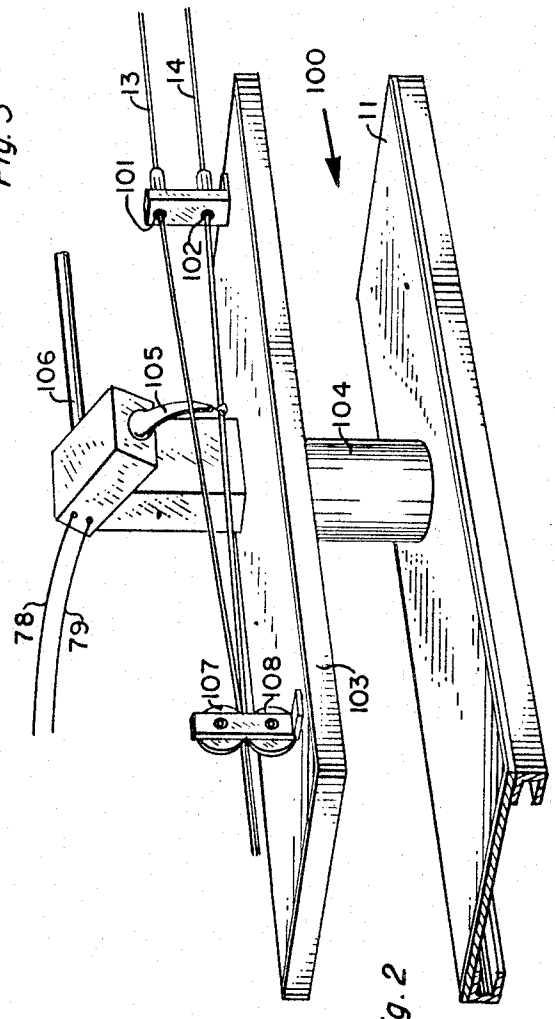

Fig. 2

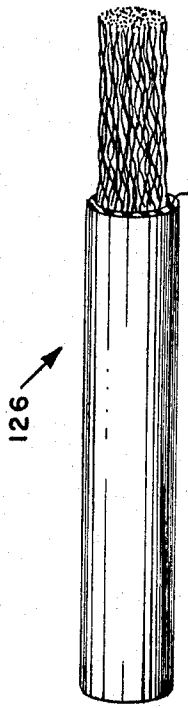

Fig. 4

INVENTORS
ROY E. CORRALL
GEORGE N. MENASOFF
V. F. Volk
THEIR AGENT

United States Patent Office 3,320,350 Patented May 16, 1967

3,320,350

REVERSE LAY STRAND

Roy E. Corrall, Franklin Square, and George N. Menasoff, Tarrytown, N.Y., assignors, by mesne assignments, to Anaconda Wire and Cable Company, a corporation of Delaware

Original application July 2, 1962, Ser. No. 206,764, now Patent No. 3,169,360, dated Feb. 16, 1965. Divided and this application Aug. 24, 1964, Ser. No. 395,639

13 Claims. (Cl. 174—34)

This is a division of application Ser. No. 206,764, filed July 2, 1962, now Patent No. 3,169,360.

Our invention relates to strand twisting and particularly to the twisting of strand with a false or reversing twist.

In the stranding of insulated conductors there are certain advantages to twisting the strands in a false twist with periodic reversals of direction of lay rather than twisting them in a continuous helix in the manner most commonly practiced. Among these advantages are the facts that in applying a false twist it is not necessary to rotate the take-up or pay-off assembly and the expensive equipment necessary for the rotation of heavy reels can be eliminated. With the elimination of heavy rotating elements comes the additional advantage of increased speed of operation. There are also advantages in the false twisted product itself in that slack can be generated in short lengths of such starnd merely by untwisting a central length of it even when the ends are remote, without any necessity for cutting the conductors. A most important advantage, however, from the vantage point of this invention, is that when strands are twisted with a false twist the stranding operation can be part of a continuous process involving steps both downstream and upstream of the twisting where the ends of the strand are not available for rotating. Such a process would occur for instance where conductors are insulated in an extruder, twisted into pairs, and combined to form a cable. In contra-distinction to such a proposed process it is present commercial practice to insulate conductors individually and take them up on reels. The insulated conductors on two of the reels are then twisted into pairs and taken up on reels again. Finally the pairs of a plurality of these reels are stranded into a cable. It has been known to apply a false twist by passing filaments through a reciprocating lay plate but the angle of such twists has been limited to a fraction of a full turn because of the tangling of strands upstream of the lay plate and in no case has been able to exceed 540°.

We have invented apparatus applying a reversing twist to advancing strand comprising means accumulating such strand which may be, but is not necessarily limited to, a sheave, a roll supporting a plurality of turns or a pair of rolls supporting at least one loop and mounted in a cradle, and also comprising means for rotating the accumulating means, such as by rotating the cradle, so as to impart a twist of one direction to the strand leaving the accumulating means, and a twist of opposite direction to the strand entering the accumulating means. Our apparatus also comprises means for alternately restraining the accumulating means against rotating for a period sufficient to advance the twisted strand from it, and may also comprise means for binding the strand, preferably at reversal points while leaving the strand free from binding elsewhere. Such binding may be quick-setting cement such as but not limited to the hot-melt adhesive such as that described in application Ser. No. 190,108, filed Apr. 25, 1962, and assigned to the assignee of this invention.

Where "reverse-lay" or "false" twisting has been used for the stranding of prior art electric cables it has not been known to twist more than a fraction of a turn between reversals. We have invented reverse twist cables with angles of twist in excess of 540° and even in excess of three or more complete turns. These may be but are not limited to telephone conductor pairs of two insulated wires or multi-pair cables comprising a plurality of such twisted pairs with a jacket overall. Our cables may be made with reverse twisting of the strands, and binding at the points of reversal, the strands being free from binding elsewhere along their lengths; and the binding may be a hot-melt adhesive.

We have also invented a method of twisting a strand comprising continuously advancing it into an accumulated supply of strand while simultaneously paying the strand from the supply and periodically rotating the supply to impart a twist to the strand leaving the supply, and an opposite twist to the strand entering the supply. In our method the supply is preferably alternately restrained against the rotating or rotated in the opposite direction until the twisted strand has paid from it and the angle of rotation is in excess of 540° and preferably encompasses a plurality of full turns. Our method also preferably comprises the step of binding the strand intermittently at reversal points as by a hot-melt adhesive, which binding may advantageously occur as the first step in our process. A more thorough understanding of our invention can be obtained from a study of the appended drawing.

In the drawing:

FIGURES 1*a* and 1*b* are perspective views of an apparatus made to our invention.

FIGURE 2 is a perspective view of an adhesive applicator used in one embodiment of our invention.

FIGURE 3 is a lengthwise view of a twisted strand of our invention.

FIGURE 4 is a lengthwise, cut-away view of a cable of strands of our invention.

Referring to FIGURES 1*a* and 1*b* a stranding apparatus, indicated generally by the numeral **10** is mounted on a base **11**. A strand **12** comprised of parallel insulated conductors **13**, **14** is advancing from right to left as seen in the drawing from a supply source not shown. One apparatus has particular utility for the twisting of telephone cable pairs such as may be made from the insulated conductors **13**, **14** but it can also be advantageously used for quads and for other types of strand comprising a greater or fewer number of conductors or other filaments. The strand **12** passes through a binding head **16** where it is bound together at fixed intervals along its length. We have shown a known type of commerically available binding head of which the Wire and Harness Taper made by the Possis Machine Corp., 825 Rhode Island Avenue, Minneapolis 26, Minn. is an example. In this embodiment of the binding head **16** a gummed tape **17** feeds from a pad **18** and a short length of the tape is automatically wrapped around the strand at selected intervals. Since our strand **12** is continuously advancing we have mounted the binding head **16** on rails **19** so that it can be advanced at the speed of advancement of the strand **12** by the rotation of a worm **21** driven by a reversing motor **22**. After the strand **12** has been bound at one point the motor **22** reverses to turn the worm **21** in the opposite direction so that the head **16** is returned to its original position. This is quite feasible in our apparatus because the long length of strand between reversal points allows ample time for the returns of the head **16**, and it constitutes one of the

advantages of our invention. Although we have shown a binding head **16** which wraps gummed tape around the strand it will be readily understood that we do not wish to be limited to this method of binding. For instance, in FIGURE 2, we have shown a binding means hereinafter to be explained in detail, which utilizes hot-melt or other quick-setting adhesive for binding our strand **12**. As the strand pays from the binding head **16** is passes through a hollow journal **23** which turns in a bearing **24** mounted on a pedestal **26**, which is in turn supported on the base **11**. Also mounted on the base **11** another pedestal **27** is surmounted by a bearing **28** in which another hollow journal **29** rotates in line with the journal **23**. The journals **23**, **29** support between them a cradle **31**, which we prefer to form from a single bar **32** for ease in stringing, as shall be shown. The bar **32** mounts an upper rigid bearing **33** which supports a grooved roll **34** on a cantilevered shaft **36**. The roll **34** is wide enough to contain a plurality of grooves **37** and it will be understood the greater the number of grooves **37**, other factors being equal, the greater will be the storage capacity of our apparatus. It is, however, contemplated that for some applications the roll **34** may have a single groove and take the form of a simple sheave. Upstream and to the right of the bearing **33**, a bearing **38** is mounted on the underside of the bar **32**. The bearing **38** supports a light-weight flanged roll **39** on a cantilevered shaft **41**. The roll **39** is wide enough to accommodate all the turns of strand supported by the grooves **37** and the strand is formed in a plurality of loops **42** enclosing the two rolls **34**, **39**. The rolls **34** and **39** are of very light-weight construction so that they are easily turned by the forward motion of the strand **12** but it will be understood that where the strand might be broken or damaged by the load incurred in turning them, the rolls **34** and **39** may be driven by gear trains or other means known to persons skilled in mechanical arts.

Before entering upon the roll **39** the strand **12** passes through a pair of pinch rolls **43**, **44** mounted on a bar **46** fixed to the base **11** by means of a pedestal **47**. Thus the pinch rolls **43**, **44** remain stationary and do not rotate along with the cradle **31** and are tight enough to prevent back twist in the strand **12**. In the embodiment of our apparatus shown in FIGURES 1*a* and 1*b* the strand **12** makes one turn around the roll **39** adjacent to the near flange, and then passes around the grooved roll **34** and back to the roll **39** to form the series of loops **42**. Leaving the roll **34** the strand passes over guide sheaves **48**, **49** through another pair of pinch rolls **51**, **52** and thence to take-up means not shown, which may incorporate another processing step. The pinch rolls **51**, **52** are fixed to a bar **53** rigidly mounted to the base **11** by means of a pedestal **54**. A belt pulley **56** is locked to the journal **23** and is driven through a belt **57** by means of a drive pulley **58** and motor **59** which we prefer to be a high-inertia rotor motor. The pulley **58** is connected to a shaft **61** of the motor **59** through a clutch **62** and can be stopped by an electric brake **63**. The clutch **62** and brake **63** are actuated by a limit switch **64** through brushes **66**, **67** and slip rings **68**, **69**. The limit switch **64** is, in turn, actuated by a cam **71** driven at a selected reduction ratio from the roll **39**. In the apparatus shown we prefer to employ a reduction ratio of 20 to 1, operating in a known manner so that the drive pulley **58** will be stopped by the disconnection of the clutch **62** and application of the brake **63** after twenty revolutions of the roll **39**, and will start again after another twenty revolutions, and so on. Thus the cradle **31** is caused to rotate for a period equal to twenty revolutions of the roll **39** and alternately to remain stationary for twenty revolutions. In this regard it should be particularly noted that in one method of operation of our apparatus the rolls **34** and **39** rotate continuously at a constant rate and the motor **59** runs continuously

in the same direction; the cradle **31**, although it stops and starts at regular intervals does not reverse its direction of rotation but rotates always in the same direction. In another method of operation the clutch **62** is a reversing clutch and the cradle **31** rotates alternately for twenty revolutions clockwise and counterclockwise.

A second limit switch **72** is connected through slip rings **73**, **74** and brushes **76**, **77** and wires **78**, **79** therefrom to the binding head **16** so that the binding head applies binding to the strand once for every twenty revolutions of the roll **39**. The switch **72** is actuated by a cam **75** driven by a reducing mechanism from the roll **39**. The cams **71** and **75** turn at equal rates of speed but are out of phase to an extent selected so that a bound point in the strand **12** reaches the pinch rolls **43**, **44** each time the rotation of the cradle **31** stops or starts.

It will be understood that although we have selected a length of twenty circumferences of the roll **39** as the length of strand between reversal points other lengths can also be chosen within the scope of our invention, but the length should correspond to the length of strand stored on the rotating cradle **31** between the pairs of pinch rolls **43**, **44** and **51**, **52**. In the illustrated case this length is just twenty circumferences of the roll **39**.

Although we have preferred to apply binding to our strand **12** upstream of its entrance into the storage rotating means our invention also will include apparatus where the binding head is mounted downstream of the cradle and applies binding to strand emerging from the pinch rolls **51**, **52**. Such a binding might be applied continuously as by winding with a yarn or tape, or it might be applied only at points of reversal. The extent of binding required depends to some extent on the springiness of the strand being twisted. We have found that polyethylene-insulated, solid-copper telephone conductor pairs can be twisted very satisfactorily on the apparatus described and shown in FIGURES 1*a* and 1*b*. Where the springiness of the strand is such that the false twist tends strongly to unwind under very slight tension this unwinding might take place in the unsupported portions of the loops **42** between the rolls **34** and **39**. This can be overcome at the expense of storage capacity by having only a single roll such as the roll **39** mounted on the cradle **31** so that the stored strand will, at all times, be restrained from unwinding by its frictional contact with the surface of the roll. If the strand is then bound continuously as it leaves the cradle, even a springy strand will retain its false twist.

OPERATION

To operate the apparatus of FIGURES 1*a* and 1*b* a pair, or other plurality of filaments making up the strand **12**, are threaded through the binding head **16**, journal **23**, and pinch rolls **43**, **44**. The strand **12** is wrapped for one turn around the roll **39** and then looped around the grooves **37** in the roll **34** and also the roll **39** until all the grooves **37** have been used. This stringing of the strand **12** is greatly simplified by the cantilever mounting of the rolls **34** and **39**. The threading of the strand continues over the sheave **48** and under the sheave **49**, through the final rolls **51**, **52** and downstream to the take-up apparatus, not shown. It will be understood that, in order to avoid waste, all or part of this threading may employ a piece of scrap lead-cord that can be discarded later.

The motor **59** is operated with the clutch **62** engaged and the brake **63** released so that the cradle **31** rotates as the strand **12** pays through the apparatus. As the cradle rotates it applies a twist to the strand **12** at the pinch rolls **51**, **52** so that the strand advancing downstream of the apparatus is twisted. At the same time, the strand **12** entering the apparatus through the pinch rolls **43**, **44** is given a twist in the opposite direction to the twist imparted by the pinch rolls **51**, **52**. As the stranding progresses the untwisted strand that was initially stored

on the rolls **34**, **39** is twisted as it pays off through the pinch rolls **51**, **52** while the fresh strand being taken up in the storage is twisted at the rolls **43**, **44** and stored in the twisted condition. When twenty circumferences of the roll **39** have been paid into the apparatus all the untwisted strand will have advanced from the storage and will have been replaced by twisted strand. At this point the cam **71** will actuate the switch **64** to disengage the clutch **62** and apply the brake **63** thus stopping rotation of the cradle **31**. However, the strand **12** will continue to pay through the pinch rolls **51**, **52**, but since all the stored strand is twisted in a direction opposite to the strand already advanced there will be a point of reversal in the strand passing through the rolls **51**, **52** at the time the cradle stops rotating. As the twisted strand continues to advance from the stationary cradle it is replaced by untwisted strand passing through the rolls **43**, **44**. When the twisted strand is completely replaced by untwisted strand the clutch **62** will engage and the cradle will start to rotate and thus repeat the cycle. During this operation the binder head **16** is applying a gummed-tape binding to points of the strand which correspond to points of reversal of twist with the result that the false twist does not unwind when the strand emerges from the apparatus. When, instead of remaining stationary at the end of each cycle, the cradle **31** rotates alternately clockwise and counterclockwise, the strand taken up in the storage is always twisted and an additional twist in the same direction is applied to the strand as it leaves the storage.

During the initial loading of the storage with twisted strand (and during each of the subsequent periods between reversal points) the cradle will make a plurality of complete revolutions: For example, if the length of twist-lay is six inches and the circumference of the roll **31** is one foot there will be forty full turns in the strand between reversal points. This large number of turns has a number of important advantages. For one thing it reduces the number of bindings required where the bindings are applied only at reversals. It provides ample time for the return of the binding head. It prevents the false twist being unwound by tension in the strand. And it reduces the frequency of starting and stopping of rotation of the cradle.

In a preferred embodiment of our invention, binding of the strand is accomplished by an apparatus **100** shown in FIGURE 2. In this apparatus the conductors **13**, **14** pass through respective separating guide blocks **101**, **102** mounted on a platform **103** on a pedestal **104** on the base **11**. Also mounted on the platform **103** is a solenoid-controlled nozzle **105** to which is supplied a suitable hot-melt, or other quick-setting cement such as that hereinbefore described through an insulated pipe-line **106** from a source not shown. The nozzle **105** is activated by the switch **72** through the lead wires **78**, **79** to apply a deposit of cement to the wire **14** at points corresponding to points of reversal of the twist, immediately after which, the conductors **13**, **14** pass between grooved pinch rolls **107**, **108** where they are brought together and bound by the cement. From the rolls **107**, **108** the strand passes through the hollow journal **23** and is processed as hereinbefore described.

The length of the conductor **14** to which cement can be continuously applied by this method is not limited and this provides for some latitude in obtaining perfect registration between the point of binding and the point of reversal of twist. Alternatively, it is within the scope of our invention to mount the apparatus **100** downstream of the cradle **31** to bind the strand after it has been twisted.

In FIGURE 3 we have shown a paired strand **110** twisted in accordance with our invention. The strand is comprised of insulated conductors **113** and **114** which can be seen to have a right-hand twist at a length **116** and a left-hand twist at a length **117**. Reversal points occur

at **118**, **119**, **121** and in between these reversals the twist in the strand continues in one direction for a large plurality of turns. At the reversal points bindings **122**, **123**, **124**, which consist in this embodiment of hot-melt adhesive, prevent the strand from opening. Although we have shown binding only at reversal points it might be continued for a longer distance within the scope of our invention, and instead of a hot-melt cement might consist of other adhesive means, or of wraps of adhesive tape or continuous servings of yarn or tape.

In FIGURE 4 a plurality of the paired strands **110** have been formed into a cable **126** with a jacket **127**.

We have invented a new and useful apparatus and method and products formed thereby for which we desire an award of Letters Patent.

We claim:

1. An electric cable comprising:
(A) a plurality of insulated conductors twisted with a reversing direction of lay having periodic points of reversal,
(B) binding applied to said cable at said points,
(C) said cable being free from said binding elsewhere along its length.

2. The cable of claim **1** wherein said binding is a quick-setting adhesive.

3. An electric cable comprising:
(A) a plurality of insulated conductors twisted with a reversing direction of lay having periodic points of reversal,
(B) the angle of twist between said points being in excess of 540°,
(C) binding applied to said cable at said points,
(D) said cable being free from said binding elsewhere along its length.

4. The cable of claim **3** wherein said binding is a quick-setting adhesive.

5. A telephone conductor pair comprising:
(A) two insulated wires twisted with a reversing direction of lay having periodic points of reversal,
(B) binding applied to said pair at said points,
(C) said pair being free from any binding elsewhere along its length.

6. The pair of claim **5** wherein said binding is a quick-setting adhesive.

7. A telephone conductor pair comprising:
(A) two insulated wires twisted with a reversing direction of lay having periodic points of reversal,
(B) the angle of twist between said points being in excess of 540°,
(C) binding applied to said pair at said points,
(D) said pair being free from said binding elsewhere along its length.

8. The pair of claim **7** wherein said binding is a quick-setting adhesive.

9. A multi-pair cable comprising:
(A) a plurality of pairs of insulated wires,
(a) said pairs each being twisted with a reversing direction of lay having periodic points of reversal,
(b) said pairs comprising binding applied at said points,
(c) said pairs being free from binding elsewhere along their lengths, and
(B) a jacket over said cable.

10. The cable of claim **9** wherein said binding is a quick-setting adhesive.

11. A multi-pair communication cable comprising:
(A) a plurality of pairs of insulated wires,
(a) said pairs each being twisted with a reversing direction of lay having periodic points of reversal,
(b) the angle of twist between reversals being in excess of 540°,
(c) said pairs comprising binding applied at said points,

(d) said pairs being free from said binding elsewhere along their lengths, and

(B) a jacket over said cable.

12. The cable of claim **11** wherein said binding is a quick-setting adhesive.

13. A multi-pair communication cable comprising:

(A) a plurality of pairs of insulated wires,

(a) said pairs each being twisted with a reversing direction of lay having periodic points of reversal,

(b) the angle of twist between reversals being a plurality of full turns,

(c) said pairs comprising binding applied at said points,

(d) said pairs being free from said binding elsewhere along their lengths, and

(B) a jacket over said cable.

References Cited by the Examiner

UNITED STATES PATENTS

491,109	2/1893	Holman	174—34
2,790,299	4/1957	Gillis et al.	57—64 X
3,025,656	3/1962	Cook	57—156 X
3,052,079	9/1962	Henning	57—156 X

LEWIS H. MYERS, *Primary Examiner.*

L. E. ASKIN, H. HUBERFELD, *Assistant Examiners.*