Oct. 24, 1944. A. PAOLI 2,361,148

GASOLINE RESERVE TANK

Filed Oct. 27, 1941

Fig. 1.

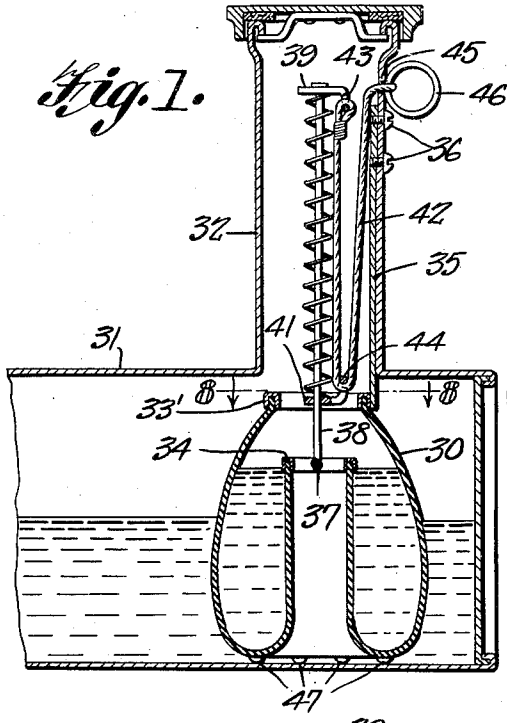

Fig. 2.

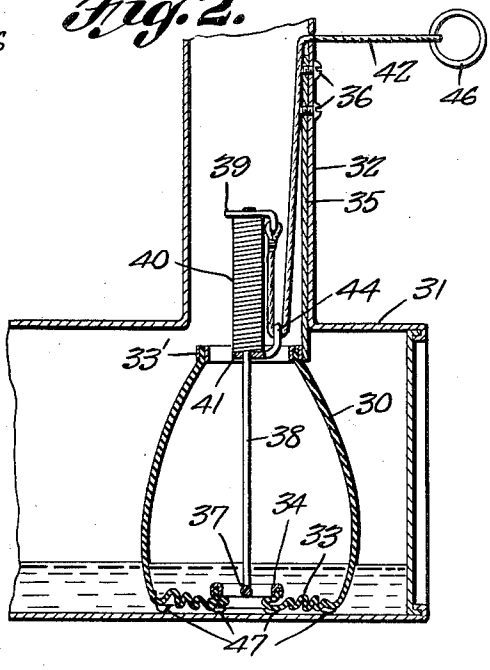

Fig. 3.

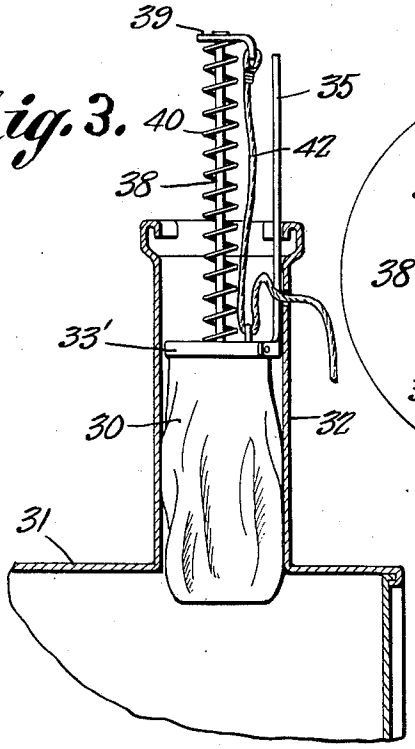

Fig. 4.

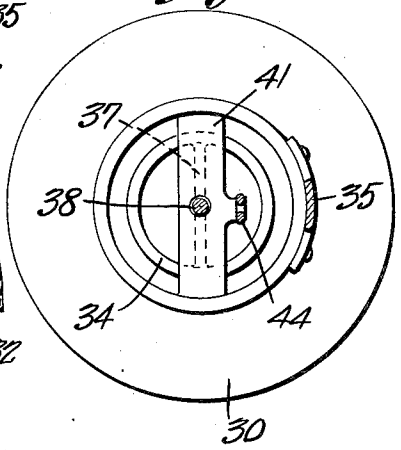

INVENTOR,
Arthur Paoli
BY
Victor J. Evans & Co.
ATTORNEYS

Patented Oct. 24, 1944 2,361,148

UNITED STATES PATENT OFFICE

2,361,148

GASOLINE RESERVE TANK

Arthur Paoli, Ironwood, Mich.

Application October 27, 1941, Serial No. 416,707

3 Claims. (Cl. 158—46.5)

This invention relates to a gasoline reserve tank and has for an object to provide a reserve gasoline container in a conventional gasoline tank adapted to be filled from the filling pipe of the tank as the tank is being filled and adapted subsequently to be emptied when desired to supply the tank with reserve gasoline when the tank is empty.

A further object is to provide a collapsible reserve tank adapted to be inserted in the gasoline tank through the filling pipe and be supported underneath the filling pipe to be filled therefrom, means being provided for deforming the filled reserve supply tank to empty its contents into the gasoline tank when needed.

A further object is to provide apparatus of this character which will be formed of a few strong, simple and durable parts, which will be inexpensive to manufacture, and which will not easily get out of order.

With the above and other objects in view the invention consists of certain novel details of construction and combinations of parts hereinafter fully described and claimed, it being understood that various modifications may be resorted to within the scope of the appended claims without departing from the spirit or sacrificing any of the advantages of the invention.

In the accompanying drawing forming a part of this specification:

Figure 1 is a longitudinal sectional view of the invention.

Figure 2 is a longitudinal sectional view of the collapsible reserve tank in emptying position.

Figure 3 is a longitudinal sectional view showing the reserve tank being inserted through the filling pipe.

Figure 4 is a cross sectional view taken on the line 8—8 of Figure 1, with parts removed.

In accordance with my invention the gasoline reserve tank is in the form of a collapsible rubber bag 30 which may be inserted in the gasoline tank 31 through the filling pipe 32. The open mouth of the bag is disposed underneath the filling pipe and is held open by a ring 33' of inverted U-shaped cross section clamped upon the mouth of the bag. The bag is provided in the bottom with an axially disposed integral tube 33 the mouth of which is disposed in axial alignment with the mouth of the bag 30 and is reinforced by a ring 34 of inverted U-shape in cross section clamped upon the open mouth of the bag. When the gasoline tank is filled the bag 30 will be filled all around the tube 33 to the level of the gasoline in the tank and as the gasoline supply in the tank 31 diminishes the reserve supply in the bag 30 recedes but can never fall below the level of the ring 34.

To empty the contents of the bag 30 the ring 34 is pushed down, the tube 33 collapsing into a series of puckers or folds, see Figure 2, while a reserve supply escapes through the ring 34 into the gasoline tank 31, as shown in Figure 2. For supporting the bag in the gasoline tank a bar 35 is secured to the ring 33' and extends upwardly in the filling pipe 35. The bar is secured to the filling pipe by screws 36 or other connectors.

For releasably holding the tube 33 in elevated position, see Figure 1, a cross bar 37 is secured to the ring 34 and a rod 38 extends upwardly from the cross bar into the filling tube 32. The top of the bar is secured to a bracket 39 and a helical spring 40 is sleeved on the rod 38 between a cross bar 41 connected to the ring 33' of the mouth of the bag, and the bracket 39, to normally hold the bracket elevated holding the tube 33 erect.

The releasing means comprises a cable 42 which is secured at one end to an eye 43 formed on the bracket 39. The cable is trained through an eye 44 connected to the cross bar 41, see Figure 2. The cable is then trained upwardly in the filling pipe to a point at about the level of the bracket 39 and is trained outwardly to the exterior of the filling pipe through an opening 45 in the filling pipe. The free end of the cable is equipped with a ring 46. By pulling outwardly on the ring, see Figure 2, the bracket 39 is pulled downwardly to lower the rod 38 against the tension of the spring 40 with resultant collapse of the tube 33 to emptying position.

Rubber knobs 47 are formed on the tube to engage the bottom of the tank so that the bottom of the bag formed by the folds produced by the tube 22 collapsed, will not hug the bottom of the tank but will be spaced sufficiently from the bottom of the tank to let the emergency supply of gasoline in the bag escape fully into the tank.

From the above description it is thought that the construction and operation of the invention will be fully understood without further explanation.

What is claimed is:

1. In a device of the character described, a liquid fuel tank having an upstanding filling pipe connected thereto, a rigid ring supported horizontally in the upper portion of the tank, a flexible tubular container having an inlet opening at one end and a smaller outlet opening at the other end, the said inlet end of the container being fastened in open position to the ring, a

second rigid ring secured to the open outlet end of the container, and means connected with the said outlet ring and adapted to normally hold the same in elevated position with the intermediate portion of the container suspended therebelow in liquid fuel containing arrangement and movable to lower the said outlet ring to discharge the contents of the container into the tank.

2. In a device of the character described, a tank adapted to contain liquid fuel having a filling opening in the top, an upstanding pipe mounted on the tank with its lower end in registration with the said filling opening, a rigid ring supported horizontally in the upper portion of the tank in registration with the filling opening, a flexible tubular container having an inlet opening at one end and a smaller outlet opening at the other end, the said inlet end of the container being fastened in open position to the ring, a second rigid ring secured to the open outlet end of the container, a vertically slidable rod having its lower end secured to the said outlet ring and spring pressed to normally assume an elevated position to hold the outlet ring in the upper portion of the container with the intermediate portion of the said container depending therebelow in liquid fuel containing arrangement, and means operable to lower the rod and the outlet ring of the container for the discharge of liquid fuel from the container into the tank.

3. In a fuel container, a tank adapted to contain liquid fuel having a filling opening in the top, an upstanding filling pipe mounted on the tank with its lower open end in registration with the filling opening, a supporting member detachably connected to the pipe and depending within the tank, a rigid ring secured to the lower end of the supporting member and held horizontally below the filling opening thereby, a flexible approximately tubular reserve container having an inlet opening at one end and an outlet opening at the opposite end, the said inlet end of the reserve container being fastened in open position to the ring, a second rigid ring secured to the open outlet end of the reserve container, a guide member carried by the said inlet ring, a vertically disposed rod slidable through the guide member and having its lower end fixed to the outlet ring, a bracket secured to the upper end of the rod, a compression spring sleeved about the rod between the guide member and the bracket so as to yieldingly hold the rod in raised position and support the outlet end of the container in elevated position with the intermediate portion of the container being suspended therebelow so as to hold liquid fuel therein, and means attached to the bracket of the rod and operative from the exterior of the tank and pipe for lowering the said rod and the container outlet for discharging the reserve fuel supply from the flexible container into the tank.

ARTHUR PAOLI.