S. GREGORY.

Portable Furnace.

No. 103,736. Patented May 31, 1870.

Fig. 1.

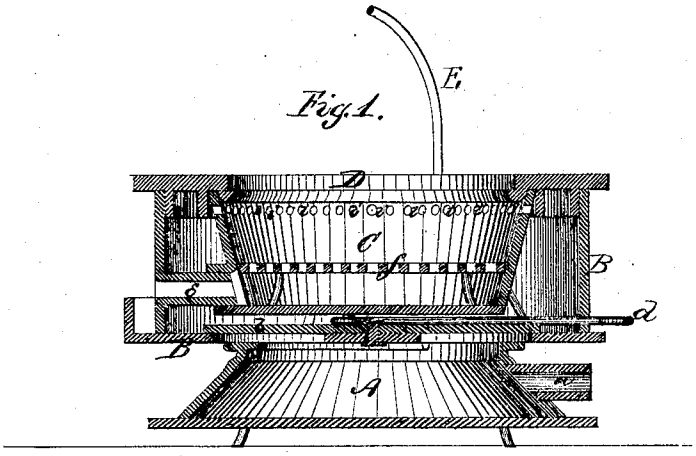

Fig. 2.

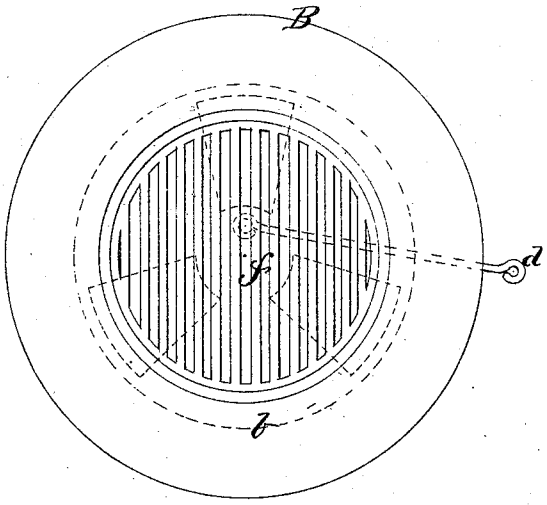

Witnesses
John A. Ellis
J. A. White

Inventor
Seth Gregory
Per,
T. J. Alexander
Atty

N. PETERS, PHOTO-LITHOGRAPHER, WASHINGTON, D. C.

United States Patent Office.

SETH GREGORY, OF GALESBURG, MICHIGAN.

Letters Patent No. 103,736, *dated May* 31, 1870.

PORTABLE FURNACE.

The Schedule referred to in these Letters Patent and making part of the same.

To all whom it may concern:

Be it known that I, SETH GREGORY, of Galesburg, in the county of Kalamazoo and State of Michigan, have invented certain new and useful Improvements in Cooking-Furnaces; and I do hereby declare that the following is a full, clear, and exact description thereof, reference being had to the accompanying drawings, and to the letters of reference marked thereon, which form a part of this specification.

The nature of my invention consists in the construction and arrangement of a "summer-furnace," which consumes its own gas, as will be hereinafter fully set forth.

In order to enable others skilled in the art to which my invention appertains to make and use the same, I will now proceed to describe its construction and operation, referring to the annexed drawings, in which—

Figure 1 is a longitudinal vertical section, and

Figure 2 is a plan view of my furnace.

A represents the base or stand of my furnace, resting upon small feet, and provided with an opening and collar, *a*, on one side, for the attachment of the stove-pipe.

The stand A contracts toward the top, and upon the same rests a circular vessel, B, forming the body of the furnace.

The bottom of this vessel is provided with any desired number of openings, which are opened and closed by means of one revolving damper, *b*, pivoted in the center of the bottom, and operated by means of the handle or bar *d*, which protrudes through the side of the vessel.

In the side thereof is also an opening, with collar or pipe *e*, which leads into the fire-basket C, resting upon small feet on the bottom of the body B, leaving a space brtween the sides and bottoms of the said body and fire-pot.

The fire-pot C is formed somewhat in the shape of a pan, having a grate, *f*, placed a suitable distance above its bottom, and a series of perforations, *i i*, around its upper edge.

On top of the body B and fire-pot C is placed a ring, D, which completely covers the space between the two, said ring being, on its under side, provided with annular flanges, which fit around the upper edges of the fire-pot and body, so as to hold the fire-pot in its place in the center of the body.

The body B is also provided with a bale, E, for carrying the furnace from place to place, where needed.

Fire being built in the pot C, and a kettle being placed on top of the ring D, it will be seen that air is supplied to the fire from under the grate *f*, through the pipe *e*, and that the smoke passes out through the side perforations *i i*, into the body B, where it descends, and, passing under the fire-pot, goes out of the body B into the stand A, and out through the stove-pipe.

The gases are entirely consumed. The draught is regulated by means of the damper *b* in the bottom of the body B.

Having thus fully described my invention,

What I claim as new, and desire to secure by Letters Patent, is—

1. The fire-pot C, provided with grate *f* and side perforations *i i*, substantially as and for the purposes herein set forth.

2. The combination of the stand A, body B, fire-pot C, and top ring D, all constructed and arranged substantially as and for the purposes herein set forth.

3. The damper *b* and rod *d*, in combination with grate *f* and body A B, all arranged substantially as and for the purpose described.

In testimony that I claim the foregoing as my own, I affix my signature in presence of two witnesses.

SETH GREGORY.

Witnesses:

R. G. SMITH,

RANSOM E. STRAIT.