G. J. A. TAGGART.

FIRE-ESCAPES.

No. 193,901. Patented Aug. 7, 1877.

Fig: 2.

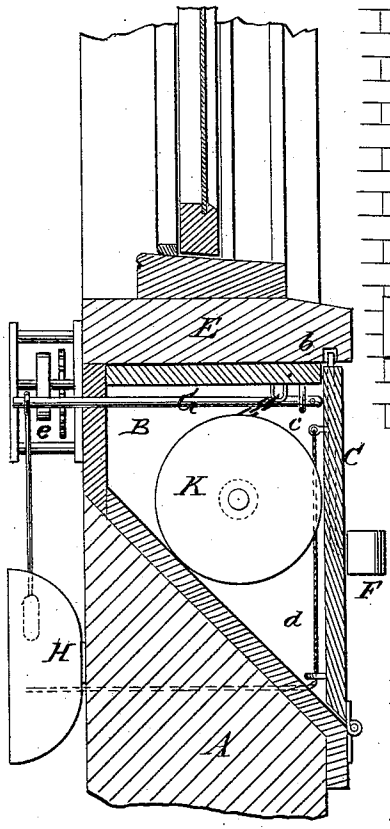

Fig: 3.

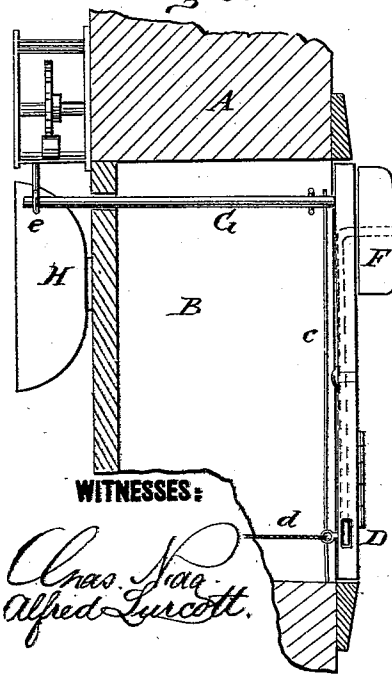

Fig: 1.

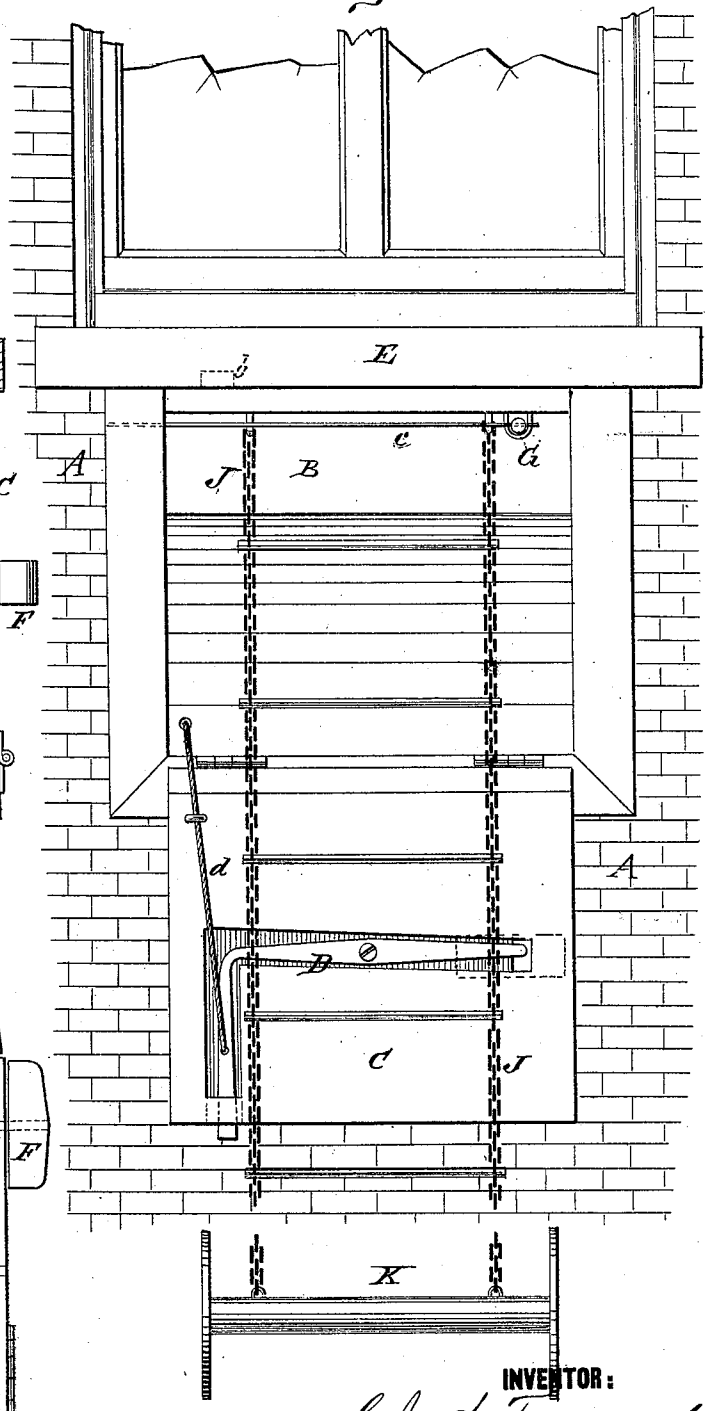

WITNESSES:

Chas. Naa
Alfred Lyscott.

INVENTOR:

G. J. A. Taggart

BY

ATTORNEYS.

N. PETERS, PHOTO-LITHOGRAPHER, WASHINGTON, D. C.

UNITED STATES PATENT OFFICE.

GEORGE J. A. TAGGART, OF PARSONS, KANSAS.

IMPROVEMENT IN FIRE-ESCAPES.

Specification forming part of Letters Patent No. **193,901**, dated August 7, 1877; application filed June 4, 1877.

To all whom it may concern:

Be it known that I, GEORGE J. A. TAGGART, of Parsons, in the county of Labette and State of Kansas, have invented a new and Improved Fire-Escape, of which the following is a specification:

This invention has relation to means for affording safe egress from the upper stories of a building which is on fire.

The invention will first be described in connection with the drawings, and then pointed out in the claims.

In the annexed drawings, Figure 1 is a front view of the wall of a building, showing my fire-escape and the receptacle therefor, arranged below a window-sill. Figs. 2 and 3 are sectional views in detail.

Similar letters of reference indicate corresponding parts.

The letter A designates the wall of a building, and B represents a recess made therein just below the sill of a window. If desired, this recess B may be lined with metal, or a cast-iron box may be set into the wall flush with its surface. The bottom of the recess should be inclined downward and outward, as indicated in Figs. 1 and 2, so as to form a self-discharging chute for a chain ladder.

C designates a trap-door, which is hinged at the bottom of the recess B, and adapted for closing the same. On the inside of the door C is an angular lever-bolt, D, the upper end of which is designed to enter a recess, *b*, made in the window-sill E, and to hold the door fast when it is shut, as shown in Fig. 2. The lower end of the lever-bolt D is extended outward through a hole made through the door C, and has attached to it a block or blade, F, arranged so that a stream of water directed upward against it from a hose will unlatch the door C and allow it to be forced open by a rod, G, acted on by a spring, *c*, attached to the top wall of the recess B. The door C may be shut by a rope or chain, *d*, which is attached to the bolt D and carried inside of the building, and which may be used for unlatching the bolt.

In hotels and other large buildings I contemplate establishing communication between each one of the trap-doors used and the office either by draw-wires or by galvanic-battery wires, so that an alarm will be sounded in the office when a trap-door is opened.

Means may be adopted for opening and shutting all of the trap-doors of a building from one fixed point, at the same time each trap-door may be opened by a person in the room to which the fire-escape is applied.

The rod G is allowed to receive free endwise play through the wall of the building, and on its inner end is loosely applied the loop of a hammer-rod arm, *e*, bearing a hammer for striking a bell, H. The hammer-rod is actuated by well-known clock-escapement mechanism, (shown in Figs. 2 and 3,) which may be inclosed in a suitable case in the room.

When the door C is shut the loop of the hammer-rod is attached to the rod G, and prevents the alarm from being sounded; but should the door C be opened, the rod G will instantly detach itself from the hammer-rod and cause an alarm.

J designates a chain ladder, which is attached to the top wall of the recess B, and made of sufficient length to reach the curb-stone of the sidewalk, where its lower end can be attached to hooks or rings fixed thereto. The lower end of the ladder is attached to a flanged drum or reel, K, on which it is wound, and put into the receptacle B, as shown in Fig. 2. When the door C is opened the reel will fall and unwind.

Having thus described my invention, I claim as new and desire to secure by Letters Patent—

1. The combination, with door C, of the spring-bolt G and lever-bolt D, the latter extended through the door and provided with a blade, F, as described.

2. The combination, with wall-chamber, having hinged door and bottom downwardly inclined to the front, of the ladder J, attached rigidly to roof of chamber at one end and to a reel, K, at the other, for the purpose specified.

GEORGE J. A. TAGGART.

Witnesses:
S. A. BIGGS,
G. P. CLARK.