US00D956885S

(12) United States Design Patent

Susuki

(10) Patent No.: US D956,885 S
(45) Date of Patent: ** Jul. 5, 2022

(54) **TOY CAR**

(71) Applicant: **EPOCH COMPANY, LTD**, Tokyo (JP)

(72) Inventor: **Momoko Susuki**, Tokyo (JP)

(73) Assignee: **EPOCH COMPANY, LTD.**, Tokyo (JP)

(**) Term: **15 Years**

(21) Appl. No.: **29/733,439**

(22) Filed: **May 1, 2020**

(30) **Foreign Application Priority Data**

Nov. 5, 2019 (JP) 2019-024607

(51) **LOC (13) Cl.** **21-01**

(52) **U.S. Cl.**
USPC **D21/548**; D21/551

(58) **Field of Classification Search**
USPC D21/533, 548, 552, 424, 433, 434, 550; D12/82, 83, 86, 88, 90, 91, 92
CPC B62D 25/00; B62D 25/06; B62D 33/00; B62D 35/00; A63H 17/00; A63H 17/05; B60Y 2200/24
See application file for complete search history.

(56) **References Cited**

U.S. PATENT DOCUMENTS

D673,624	S *	1/2013	Kasahara	D21/434
D714,880	S *	10/2014	Hattori	D21/551
D724,158	S *	3/2015	Tsuchiya	D21/559
D760,325	S *	6/2016	Sano	D21/552
D861,082	S *	9/2019	Talios	D21/552
D896,323	S *	9/2020	Kamiyama	D21/533
D924,985	S *	7/2021	Matsuyama	D21/551
11,077,384	B2 *	8/2021	Talios	A63H 33/008

FOREIGN PATENT DOCUMENTS

WO	WO-D207011-002	* 9/2020
WO	WO-D207011-003	* 9/2020

OTHER PUBLICATIONS

Calico Critters Family Picnic Van, available on Amazon.com, release date Jan. 22, 2021, [site visited Dec. 10, 2021], URL: https://www.amazon.com/Calico-Critters-Vehicle-Collectible-Figures/dp/B08TT8XK6R/ (Year: 2021).*

(Continued)

Primary Examiner — Dana K Weiland
Assistant Examiner — Emily Anna Saunders
(74) *Attorney, Agent, or Firm* — Fitzgerald IP Law; John K Fitzgerald, Esq.

(57) **CLAIM**

The ornamental design for a toy car, as shown and described.

DESCRIPTION

FIG. **1** is a perspective view of the front, top, and left side of a toy car showing my new design;
FIG. **2** is a perspective view of the rear, top, and right side thereof;
FIG. **3** is a front side view thereof;
FIG. **4** is a rear view thereof;
FIG. **5** is a top plan view thereof;
FIG. **6** is a right side view thereof;
FIG. **7** is a left side view thereof; and,
FIG. **8** is a perspective view of the front, top, and left side, showing the top of the toy car being removed and in a position of use to allow access to an interior of the top of the toy car.

The broken lines shown are included for the purpose of illustrating portions of the article which form no part of the claimed design.

1 Claim, 8 Drawing Sheets

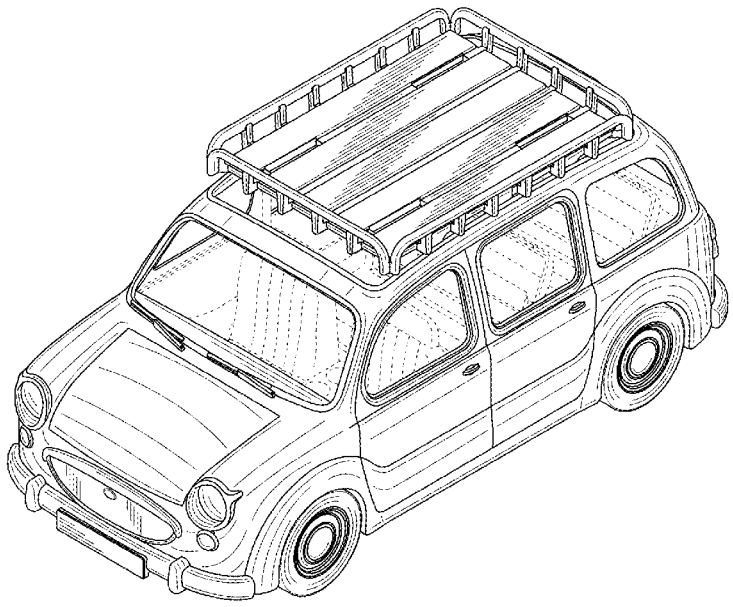

(56) **References Cited**

OTHER PUBLICATIONS

Sylvanian Families, Calico Critters, Family Picnic Van UNBOXING, date posted Feb. 12, 2021, [site visited Dec. 10, 2021], URL: https://www.youtube.com/watch?v=At3q3uG72a8 (Year: 2021).*
Sylvanian Families 5535 Family Picnic Van, available on Amazon.co.uk, release date Feb. 26, 2021, [site visited Dec. 10, 2021], URL: https://www.amazon.co.uk/Sylvanian-Families-5535-Family-Picnic/dp/B08SHWQZW3/(Year: 2021).*
Sylvanian Families/Calico Critters Family Picnic Van Unboxing, available on YouTube.com, date posted Mar. 8, 2021, [site visited Dec. 10, 2021], URL: https://www.youtube.com/watch?v=rmdkNb-872U (Year: 2021).*
Sylvanian Families 5535 Family Picnic Van, available on Amazon.com, release date Jul. 1, 2021, [site visited Dec. 10, 2021], URL: https://www.amazon.com/Sylvanian-Families-5535-Family-Picnic/dp/B08SHWQZW3/ (Year: 2021).*
Calico Critters Family Picnic Van, available on calicocritters.com, [site visited Dec. 10, 2021], URL: https://calicocritters.com/catalog/item_detail.php?product_id=2048 (Year: 2021).*

* cited by examiner

FIG. 1

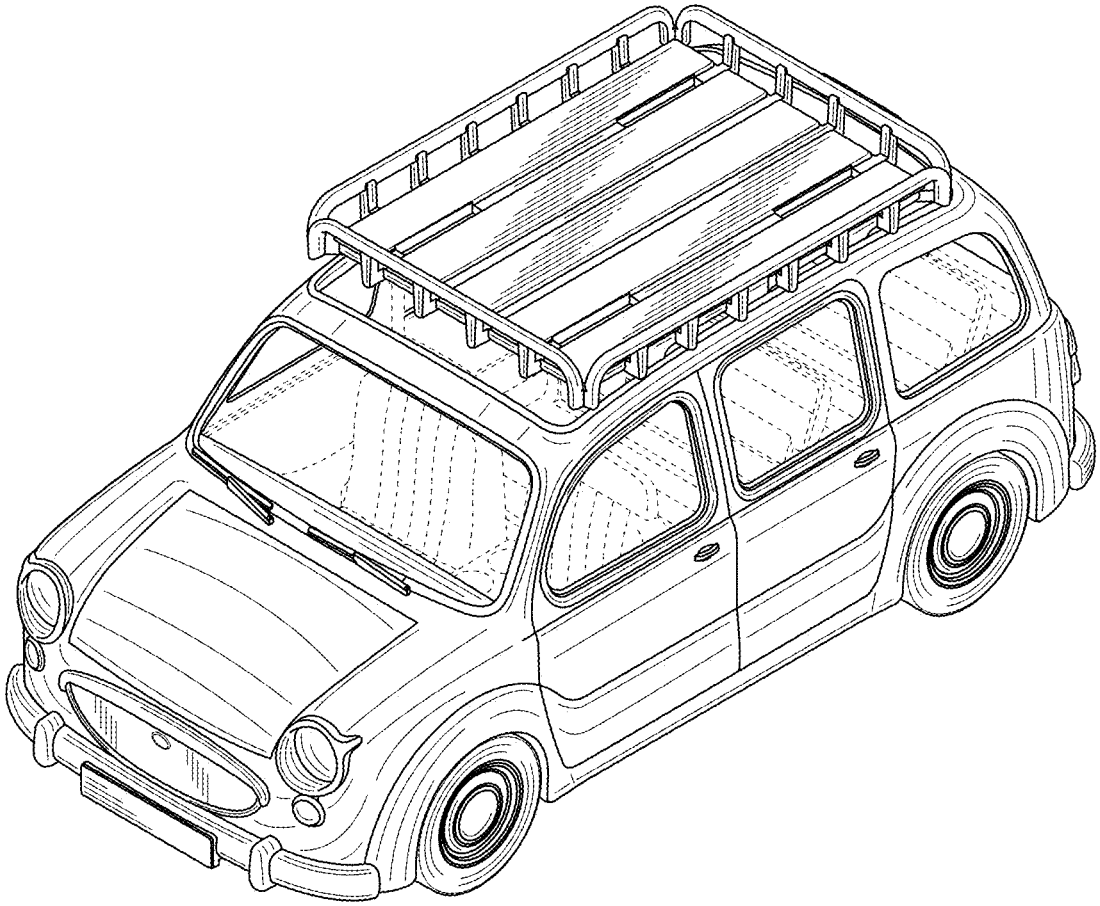

FIG. 2

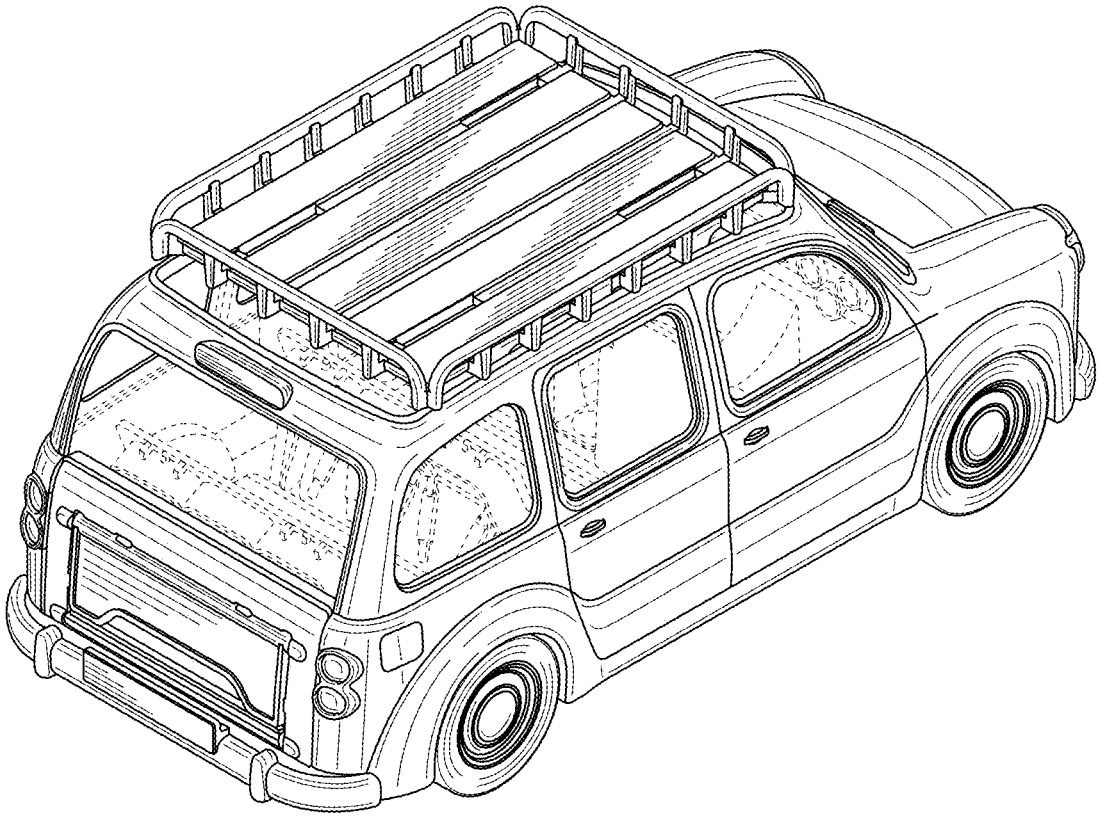

FIG. 3

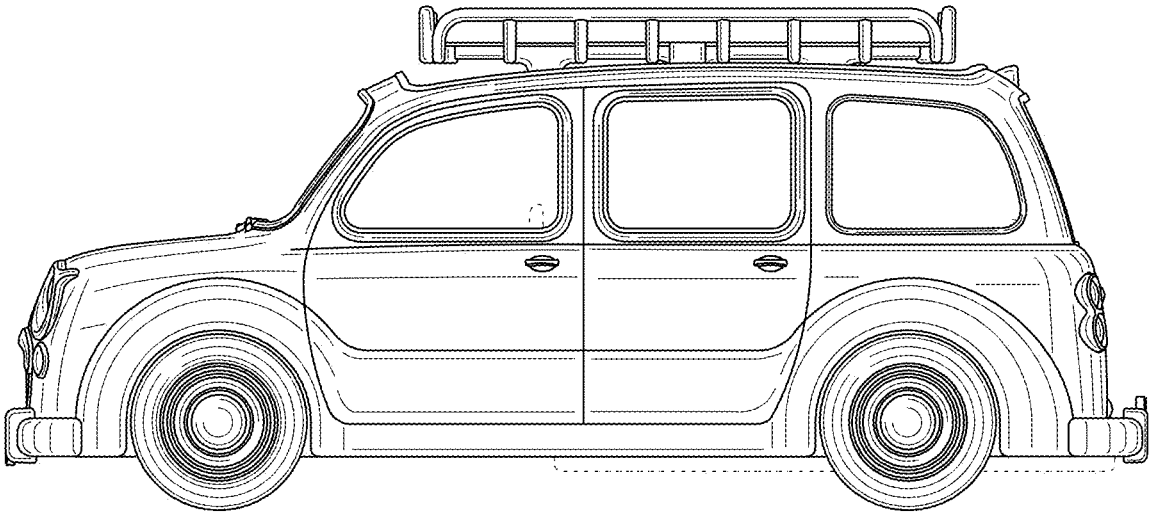

FIG. 4

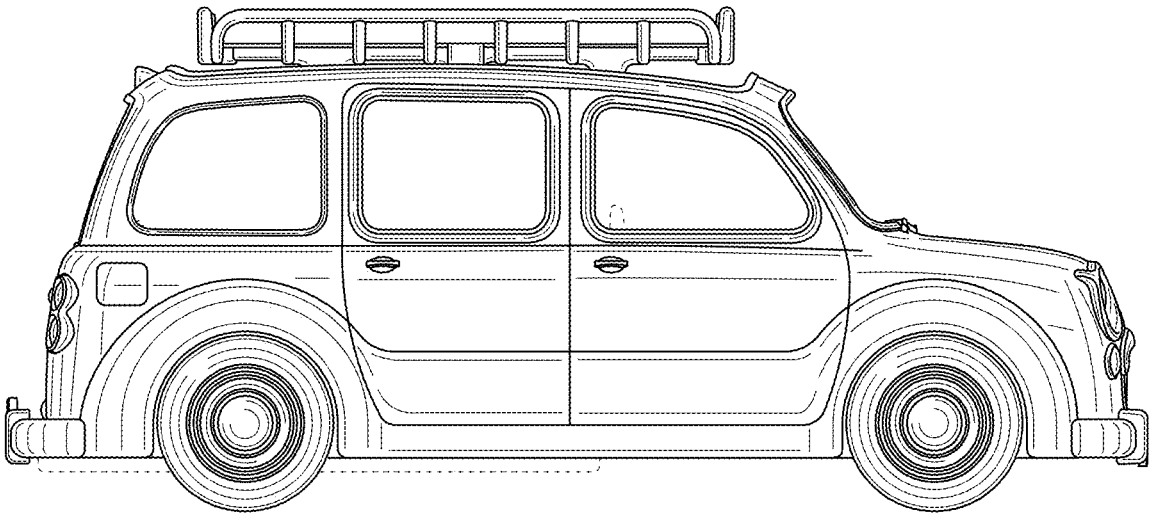

FIG. 5

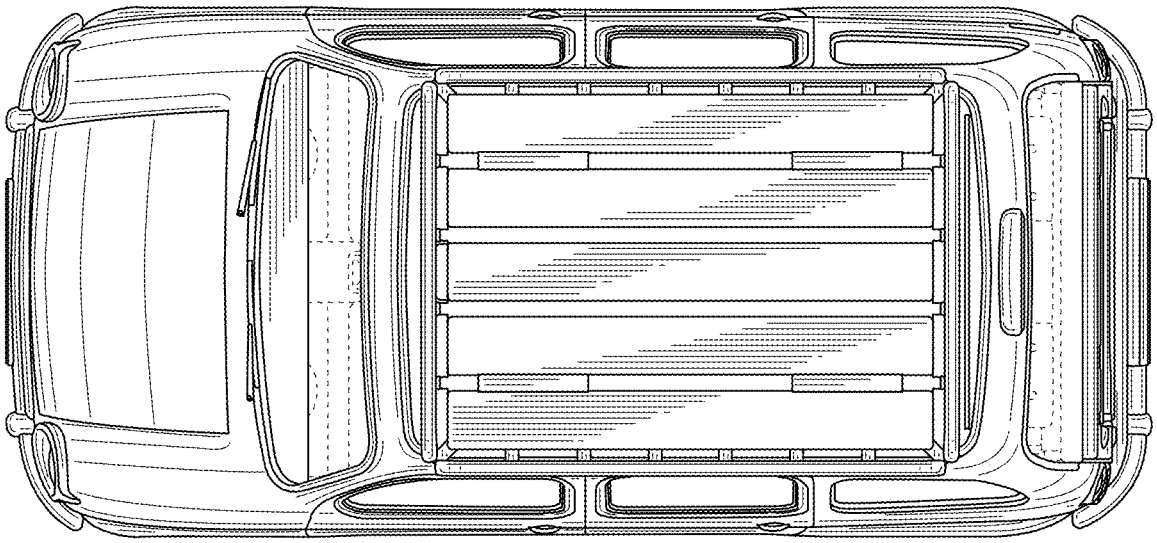

FIG. 6

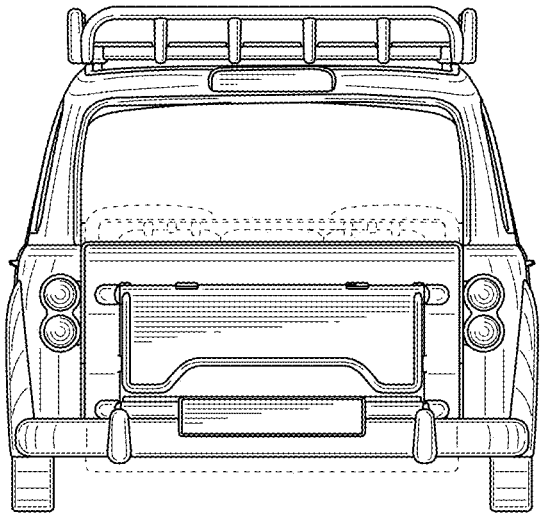

FIG. 7

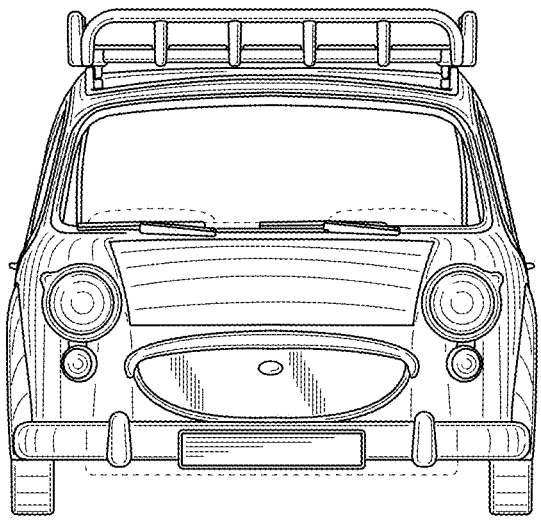

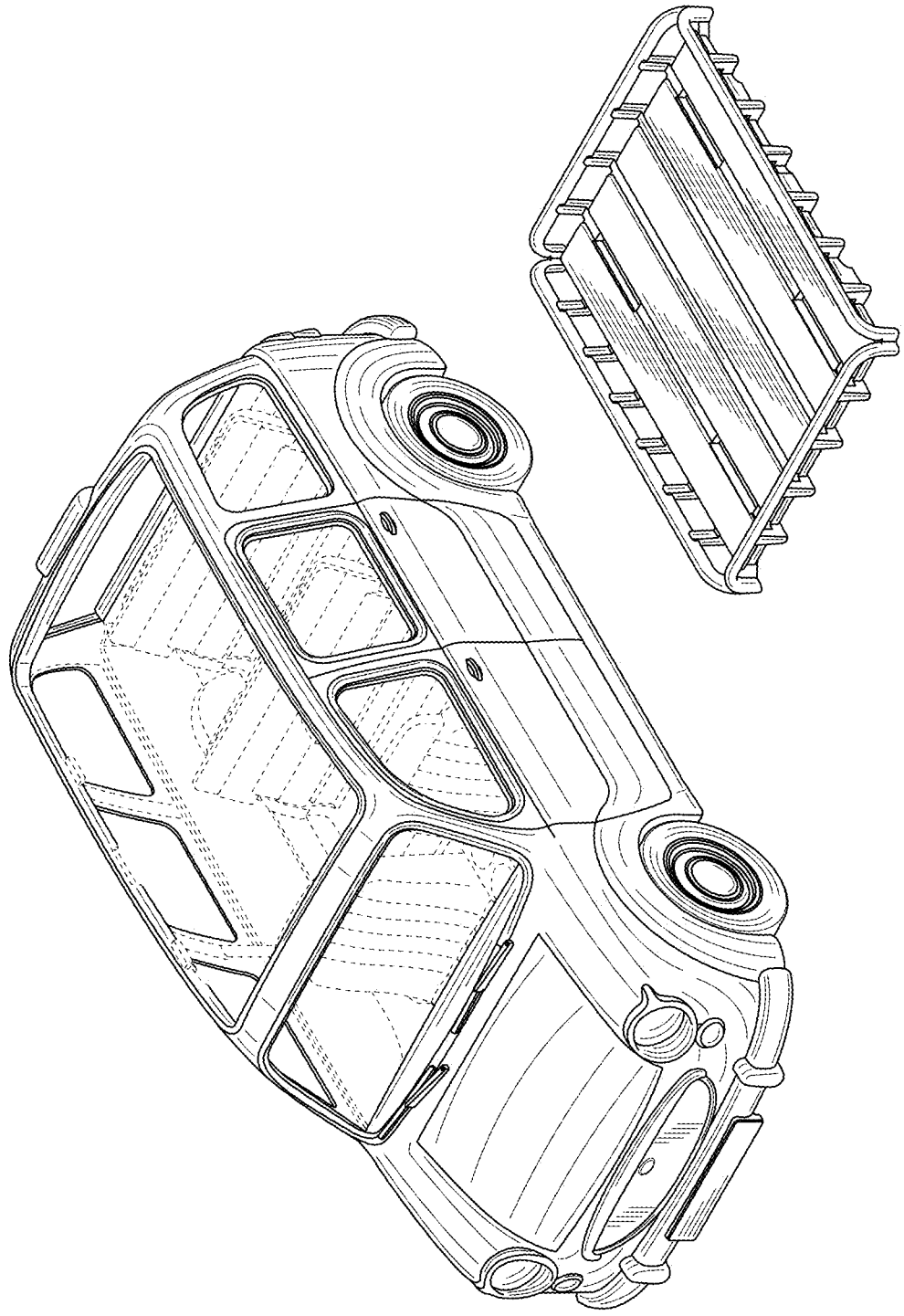

FIG. 8