(12) INTERNATIONAL APPLICATION PUBLISHED UNDER THE PATENT COOPERATION TREATY (PCT)

(19) World Intellectual Property Organization
International Bureau

(43) International Publication Date
30 July 2020 (30.07.2020)

WIPO | PCT

(10) International Publication Number
WO 2020/153856 A1

(51) International Patent Classification:
E05C 1/06 (2006.01) *E06B 7/28* (2006.01)
E05B 53/00 (2006.01)

(21) International Application Number:
PCT/PL2020/000002

(22) International Filing Date:
15 January 2020 (15.01.2020)

(25) Filing Language: English

(26) Publication Language: English

(30) Priority Data:
P.428645 22 January 2019 (22.01.2019) PL

(72) Inventor; and
(71) Applicant: **AUGUSTOWSKI, Miroslaw** [PL/PL]; Zaczernie 167, 36-062 Zaczernie (PL).

(81) Designated States *(unless otherwise indicated, for every kind of national protection available)*: AE, AG, AL, AM, AO, AT, AU, AZ, BA, BB, BG, BH, BN, BR, BW, BY, BZ, CA, CH, CL, CN, CO, CR, CU, CZ, DE, DJ, DK, DM, DO, DZ, EC, EE, EG, ES, FI, GB, GD, GE, GH, GM, GT, HN, HR, HU, ID, IL, IN, IR, IS, JO, JP, KE, KG, KH, KN, KP, KR, KW, KZ, LA, LC, LK, LR, LS, LU, LY, MA, MD, ME, MG, MK, MN, MW, MX, MY, MZ, NA, NG, NI, NO, NZ, OM, PA, PE, PG, PH, PL, PT, QA, RO, RS, RU, RW, SA, SC, SD, SE, SG, SK, SL, ST, SV, SY, TH, TJ, TM, TN, TR, TT, TZ, UA, UG, US, UZ, VC, VN, WS, ZA, ZM, ZW.

(84) Designated States *(unless otherwise indicated, for every kind of regional protection available)*: ARIPO (BW, GH, GM, KE, LR, LS, MW, MZ, NA, RW, SD, SL, ST, SZ, TZ, UG, ZM, ZW), Eurasian (AM, AZ, BY, KG, KZ, RU, TJ, TM), European (AL, AT, BE, BG, CH, CY, CZ, DE, DK, EE, ES, FI, FR, GB, GR, HR, HU, IE, IS, IT, LT, LU, LV, MC, MK, MT, NL, NO, PL, PT, RO, RS, SE, SI, SK, SM, TR), OAPI (BF, BJ, CF, CG, CI, CM, GA, GN, GQ, GW, KM, ML, MR, NE, SN, TD, TG).

Declarations under Rule 4.17:
— *of inventorship (Rule 4.17(iv))*

(54) **Title:** A PEDAL SET TO SHIFT A BOLT, PREFERABLY FOR LOCKING TOILET DOORS

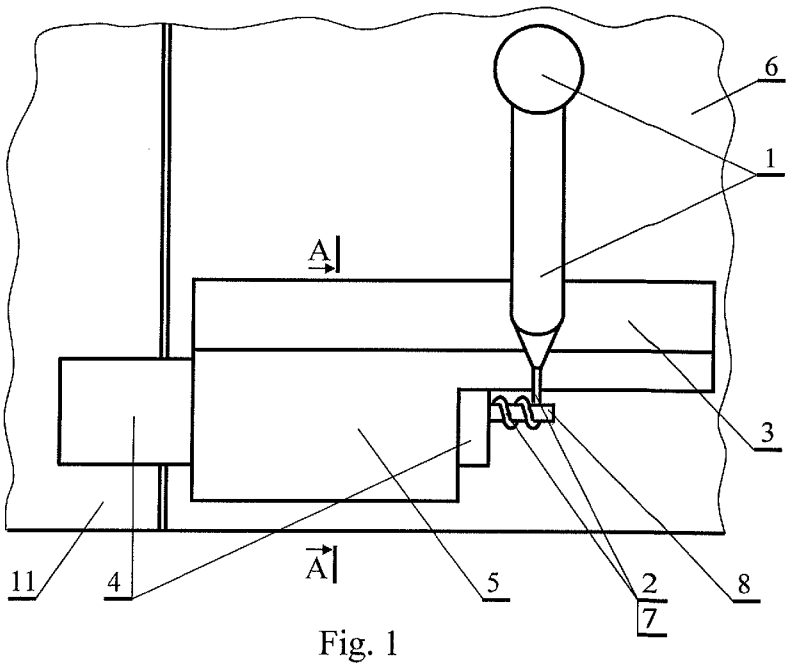

Fig. 1

(57) **Abstract:** A pedal set to shift a bolt, preferably for locking toilet doors, is characterized by the fact that it is equipped with a flexible safety element (2) which, when pressed too hard by one's foot, deforms in such a way that the foot slides down from the pedal (1). The pedal set should be installed in a lower part of a door leaf (6) and it consists of a pedal (1) connected through a flexible safety element (2) with a bolt (4) and of a protective shell (3).

WO 2020/153856 A1

[Continued on next page]

Published:

— *with international search report (Art. 21(3))*

— *before the expiration of the time limit for amending the claims and to be republished in the event of receipt of amendments (Rule 48.2(h))*

A pedal set to shift a bolt, preferably for locking toilet doors.

The subject of the invention is a pedal set to shift a bolt, preferably for locking toilet doors. The invention can be used to shift different bolts by means of one's foot but it is especially advantageous in the toilets where a higher hygiene is required and using one's foot instead of a hand to shift a bolt lowers the risk of transmitting various diseases. The invention can be applied to different types of bolts e.g. to those moving along the line, on the arc and any other curve. It can be applied to the doors with both swing and sliding door leafs.

All the currently know mechanisms which are used to shift a bolt are adapted for moving them by hands. Touching with our hands the same surfaces by many people, especially in public toilets, is the reason for many infections and constitutes a serious health problem. Therefore, for health reasons and also to enable going through the door when our hands are busy, the doors which do not engage our hands are developed. In most cases, bolts which are handled by our hands have small elements which allow us to move them with our fingers, or sometimes they have small knobs which through different mechanisms move a bolt. As our hands are much more precise, smaller and not as strong as our legs, these elements can be tiny and not necessarily resistant to large pressure. It is not enough to just move these elements to the level of our legs for them to be safely and effectively operated by our feet.

The device known from the patent description No. FR 2951487 (fig. 1-3) has two identical mechanisms situated on both sides of the door leaf equipped with a lock which can be opened by means of the two-sided handles. Each of the mechanisms constitutes a rectangular plate mounted on the lower end of the door leaf, close to its corner, and a diagonally situated rectangular foot pedal being fitted to the plate and connected through its one end with a rod connector of which the other end is attached to the door handle planted in the door lock being situated in the side of the door opposite the door hinges which connect the door leaf with the

door frame. The versions of the device presented in fig. 6, fig. 7A and 7B feature also a bolt allowing the user to lock the door.

The device known from the patent description No. US 7270352 B1 designed to open and close the door, preferably the toilet door, equipped with the usual handles or doorknobs and adjusted to be operated with one's foot, consists of an elongate unit connecting the door handle with the lower end of the door leaf. The elongate unit consists of an actuator shaft, held in a tubular housing, of which the upper end is fixed to the handle or doorknob by means of a cord or a strap and the lower end carries a foot pedal. The whole device is secured to the door leaf through the housing of which the lower end is equipped with a hook component which is interengaged with the lower edge of the door and the upper end is looped over the doorknob shaft by means of a bracket. The upper part of the actuator has strap elements which enable to operate the door handle or a doorknob with a foot pedal connected with these elements by means of an actuator. The user steps on the pedal which, through the connection with the actuator and strap elements attached to the doorknob, makes the knob rotate and release the latch. The pedal is then pulled or pushed by one's foot so that the housing and hook, firmly fastened to the door, pivot the door open.

The device known from the patent description No. US 4569546A has a pedal connected with the doorknob clamp through a cord or the like. The pedal is fixed to the bottom of a door and the clamp is secured to the doorknob. Once the user presses the pedal, the cord tightens and turns the doorknob which makes the door latch retract from the door jamb and allows the user to either pull or push the door with one's foot. The pedal is attached to the door through a hinge but also rests on a supporting surface or floor through a wheel or caster secured to the underside of the pedal base. The pedal is also equipped with a spring which sets it back in the initial position.

The device known from the patent description No. WO 2011123478 is a locking system allowing to block the door with one's foot. It consists of a spinning

bolt fixed to the lower and swinging part of the door leaf and an element hosting the bolt installed in the door frame. Both ends of the bolt have elements allowing the user to spin it with one's foot.

In the examples presented in the above descriptions, there are elements which allow us to move a bolt (including the latchlock) and block a door by means of our feet. The elements do not have any protection against an excessive power of one's foot which may result in a damage of these elements and also other elements on which the excessive power of one's foot may be transmitted e.g. door hinges which are usually very delicate, especially in sanitary cabins. The elements also do not feature the proper shapes which would allow to pull the door leaf to oneself in an easy way. The only purpose of the elements is to move a bolt and one needs to step hard on the element and increase the friction between the element and one's sole to pull a door leaf to oneself, especially when a door leaf needs to be pressed hard to a door frame. Hard stepping can in result cause mechanical failures.

The purpose of the invention is eliminating the abovementioned inconveniences i.e. building a pedal set resistant to strong powers, which may occur while operating it by means of one's foot, and also enabling to easily pull a door leaf to oneself.

The essence of a pedal set to shift a bolt, preferably for locking toilet doors is the fact that it is equipped with at least one flexible safety element. The flexible safety element is any element which, under the excessive power of one's foot interacting with the pedal, will deform in such a way that one's foot will slide down from the pedal. The flexible safety element will protect the mechanism from an excessive power of one's foot resulting from not only the unskillful usage of it but also accidental and deliberate stepping on it and kicking. There are many ideas which can be effectively adapted and used as the flexible safety element and each of them can be applied here. The reason for applying the flexible safety element in this invention is the fact that it will deform and make one's foot slide down from the pedal. An easy and cheap solution may be each type of spring: cylindrical,

conical, flat, spiral, etc. The material used for making it can be e.g. elastic metal and plastic as well as rubber or any other material with resilient properties. To increase the stiffness, it is advantageous for the flexible safety element to have the initial tension so that the elastic deformation will occur only when one's foot exceeds this tension, as in case of safety bindings used in skis.

It is beneficial when the upper part of a pedal is situated in the acute angle (α) towards the vertical surface of a door leaf. Such location of the pedal will enable to pull the door leaf to oneself by means of this pedal. The smaller the angle the more difficult it is for one's sole to slide down from the pedal while pulling the door.

It is beneficial when the pedal set has a protective shell with rounded and steep surfaces. The pedal should not be covered with the protective shell as it should be easily accessible and thanks to the flexible safety element the pedal is resistant to an excessive power of one's foot. However, the elements fixing the pedal and the flexible safety element to a door leaf may not be resistant to an excessive power of one's foot and therefore it is preferable to apply a shell protecting these elements. Rounded and steep surfaces of the protective shell let one's foot easily slide down from it.

It is beneficial when the flexible safety element has a head situated in a socket and pressed to this socket by means of an elastic element, and when the shape of the head is adjusted to the shape of the socket.

It is beneficial when the flexible safety element is made of a cylindrical spring.

It is beneficial when the flexible safety element is made of a tension spring situated in a tension bush. The tension bush gives the spring the initial tension and thus the connection is stiff and under small pressure of one's foot the pedal does not change its position towards the bolt which makes it easier to move the bolt.

It is beneficial when the flexible safety element is made of a rubber rod or rubber bush element. When the bush element is applied the connection keeps high

stiffness when the power of one's foot is lower than the power required to deform the side of the bush element, and when the power is exceeded, the connection gets highly flexible making one's foot slide down from the pedal.

The advantage of the solution in accordance with the invention is resistance to strong powers which may occur while using it by means of one's foot. Applying the flexible safety element (or units) makes one's foot slide down from it when high power is used because the element yields to the excessive pressure. It protects the pedal from damaging it and also protects the other elements to which the excessive power could be transmitted.

Thanks to the fact that the angle between the upper part of the pedal and the vertical surface of the door leaf is smaller than 90°, the pedal can be used not only to move a bolt and push the door leaf but also to pull the door to oneself. In case of the door opening to the outside of the cabin, it allows simultaneous pressing the door leaf to the frame and shifting the bolt, which was not possible in previous solutions, and as the door is often not perfectly adjusted to the frame, moving the bolt is impossible without pressing the door leaf to the frame. In case of the door opening to the inside of the cabin, the pedal set in such an angle allows opening the door leaf by means of the pedal immediately after unblocking the door without moving one's foot to any other element allowing us to move the door leaf.

Using a protective shell featuring rounded and steep surfaces which are vertical or close to vertical, or very narrow and close to the surface of the door makes it impossible to damage it by stepping on it because one's foot would slide down if anyone tried to step on it. It is beneficial if the protective shell covers also the flexible safety element and other elements not resistant to stepping on them e.g. a bolt, a bolt track, etc.

The pedal set in accordance with the invention has been shown in the pictures in which fig. 1 presents the front view of the first example of the pedal set, fig. 2 presents the first example of the pedal set in the vertical section through the protective shell, bolt track and bolt, fig. 3 presents the front view of the second

example of the pedal set, fig. 4 presents the second example of the pedal set in the vertical section through the protective shell, bolt track and bolt, fig. 5 presents the second example of the pedal set in the vertical section through the protective shell, bolt, pedal and flexible safety element, fig. 6 presents the front view of the third example of the pedal set, fig. 7 presents the third example of the pedal set in the vertical section through the bolt track and bolt, fig. 8 presents the third example of the pedal set in the vertical section through the protective shell, bolt, pedal and flexible safety element, fig. 9 presents the front view of the fourth example of the pedal set, fig. 10 presents the fourth example of the pedal set in the vertical section through the bolt, protective shell, pedal and flexible safety element, fig. 11 - fig. 14 present four examples of the flexible safety element where fig. 11 presents the vertical section of the flexible safety element with the head situated in the socket and pressed to this socket by means of the elastic element, fig. 12 presents the side view of the flexible safety element with a cylindrical spring, fig. 13 presents the vertical section of the flexible safety element with the tension spring situated in the tension bush, fig. 14 presents the side view of the flexible safety element with rubber rod or rubber bush element.

In fig. 4, fig. 5, fig. 7, fig. 8 and fig. 10 the flexible safety element is presented as a symbol resembling a tension spring located in a tension bush but the symbol should mean any type of the flexible safety element.

In the four examples of the pedal set presented in fig. 1 - fig. 10, the pedal set in accordance with the invention consists of the pedal 1, the flexible safety element 2 and the protective shell 3. The pedal 1 and the flexible safety element 2 are necessary for the device to work properly while the protective shell 3 can be excluded from the device for e.g. economic reasons.

In the first example of the pedal set presented in fig. 1 and fig. 2 the pedal 1 is connected through the flexible safety element 2 with the bolt 4 being moved in the bolt track 5. The protective shell 3 is fixed stiffly to the door leaf 6 and protects the flexible safety element 2 from being stepped on as well as protects the bolt

track with which the flexible safety element constitute a composite whole. The flexible safety element 2 is in this example made of a cylindrical spring 7 of which one end is fixed stiffly to the bolt 4, the cylindrical part is wound around the cylindrical element 8 and the other end of the cylindrical spring 7 is fixed stiffly to the pedal 1.

The second example of the pedal set presented in fig. 3, fig. 4 and fig. 5 has a similar structure to the first one. The crucial difference is the fact that the protective shell 3 does not constitute a composite whole with the bolt track 5 but they are two separate elements and each of them individually and stiffly fixed to the door leaf 6. As in the first example, the pedal 1 is connected through the flexible safety element 2 with the bolt 4 being moved in the bolt track 5.

In the third example of the pedal set presented in fig. 6, fig. 7 and fig. 8 the protective shell 3 connected stiffly (or constituting a composite whole) with the bolt 4 are connected through the flexible safety element 2 with the pedal 1. The bolt track 5 consists of two parts between of which the protective shell 3 is located.

In the fourth example of the pedal set presented in fig. 9 and fig. 10 the bolt 4 does not have the bolt track 5, but it spins around the pivot 9. The protective shell 3 connected stiffly (or constituting a composite whole) with the bolt 4 are connected through the flexible safety element 2 with the pedal 1. The spin limiter 10 limits the spin angle of the bolt 4.

In all the above examples of the pedal set, shifting the bolt 4 left (front view) blocks the door leaf 6 with the door frame 11. After shifting the bolt 4 right (front view) the door leaf 6 can be moved away from the door frame 11 allowing the user to go through the door. In order to close and block the door, the user should set one's foot on the pedal 1 and pull it to oneself, pulling at the same time the door leaf 6 to the door frame 11. After pressing the door leaf 6 to the door frame 11, the user moves the pedal 1 to the left which simultaneously moves the bolt 4 and blocks the door leaf 6. When the pedal 1 is used with an excessive power, the flexible safety element 2 deforms and the foot of the user slides down from it.

In the example of the flexible safety element 2 presented in fig. 11, the end of the pedal 1 has the head 12 set in the socket 13 made in the bolt 4, and the shape of the head 12 is adjusted to the shape of the socket 13. The head 12 is pressed to the socked 13 by means of the elastic element 14 in the form of a resilient metal strip fixed to the bolt 4 by means of a screw 15. When treated with low power, the connection is stiff. When the excessive power of one's foot is applied, the head 12 may freely turn in the socket 13 which allows moving the pedal 1 to the position in which one's foot slides down from the pedal 1. After one's foot slides down, the elastic element 14 presses the head 12 to the socket 13 which makes the pedal move back to the initial position. It is beneficial when the shape of the head 12 and the socket 13 is not symmetrical towards the horizontal axis of the head 12 and the socket 13 which counteracts the spinning of the pedal 1.

In the example of the flexible safety element 2 presented in fig. 12, the pedal 1 is connected with the bolt 4 through the cylindrical spring 7 functioning as the flexible safety element 2. One end of the cylindrical spring 7 is set in the spring socket of the pedal 16 and the other end of the cylindrical spring is set in the spring socket of the bolt 17. The cylindrical spring 7 is stiff enough to allow moving the bolt 4. When the excessive power of one's foot is applied, the cylindrical spring 7 deforms and makes the pedal 1 move to the position in which one's foot slides down from the pedal 1. After one's foot slides down, the cylindrical spring 7 and the pedal 1 move back to the initial position. It is beneficial when the cylindrical spring 7 has an initial tension between the neighboring coils because it increases the stiffness of the connection.

In the example of the flexible safety element 2 presented in fig. 13 the pedal 1 is connected with the bolt 4 through the tension spring 18 located in the tension bush 19. The front of the end of the pedal 1 and the bolt 4 have properly shaped fastening sections 20 and 21 situated opposite to each other and located in the tension bush 19 with the tension spring 18 inside. The ends of the tension spring 18 are fixed to the hooks 23 and 24 of both fastening sections 20 and 21. When

treated with low power, the connection is stiff. When the excessive power of one's foot is applied, the tension spring 18 stretches which makes the pedal 1 move to the position in which one's foot slides down from the pedal 1. After one's foot slides down, the tension spring 18 makes the pedal 1 move back to the initial position. It is beneficial when the two ends of the tension bush 19 and the adjusted fastening sections 20 and 21 are shaped not symmetrically towards the horizontal axis of the tension bush 19 which counteracts the spinning of the pedal 1. In some cases it might be more beneficial to stiffly connect one end of the tension bush 19 with the fastening sections 20 or 21.

In the example of the flexible safety element 2 presented in fig. 14, the pedal 1 is connected with the bolt 4 through the rubber rod or rubber bush element 24 being fixed to the pedal 1 and the bolt 4 with the screw elements 25 and 26.

In the examples presented in fig. 11 - fig. 14, the flexible safety element 2 connects directly the pedal 1 with the bolt 4 but it can also connect the pedal 1 with other in-between elements transmitting the move from the pedal 1 to the bolt 4 and can also connect two parts of the compound pedal 1.

Patent claims

1. A pedal set to shift a bolt, preferably for locking toilet doors, **characterized by the fact that** it is equipped with at least one flexible safety element (2).
2. The pedal set according to claim 1, **characterized by the fact that** the upper part of the pedal (1) is situated in the acute angle (α) towards the vertical surface of a door leaf (6).
3. The pedal set according to claim 1, **characterized by the fact that** it has a protective shell (3) with rounded and steep surfaces.
4. The pedal set according to claim 1, **characterized by the fact that** the flexible safety element (2) has a head (12) situated in a socket (13) and pressed to this socket (13) by means of an elastic element (14), and the shape of the head (12) is adjusted to the shape of the socket (13).
5. The pedal set according to claim 1, **characterized by the fact that** the flexible safety element (2) is made of a cylindrical spring (7)
6. The pedal set according to claim 1, **characterized by the fact that** the flexible safety element (2) is made of a tension spring (18) situated in a tension bush (19).
7. The pedal set according to claim 1, **characterized by the fact that** the flexible safety element (2) is made of a rubber rod or rubber bush element (24).

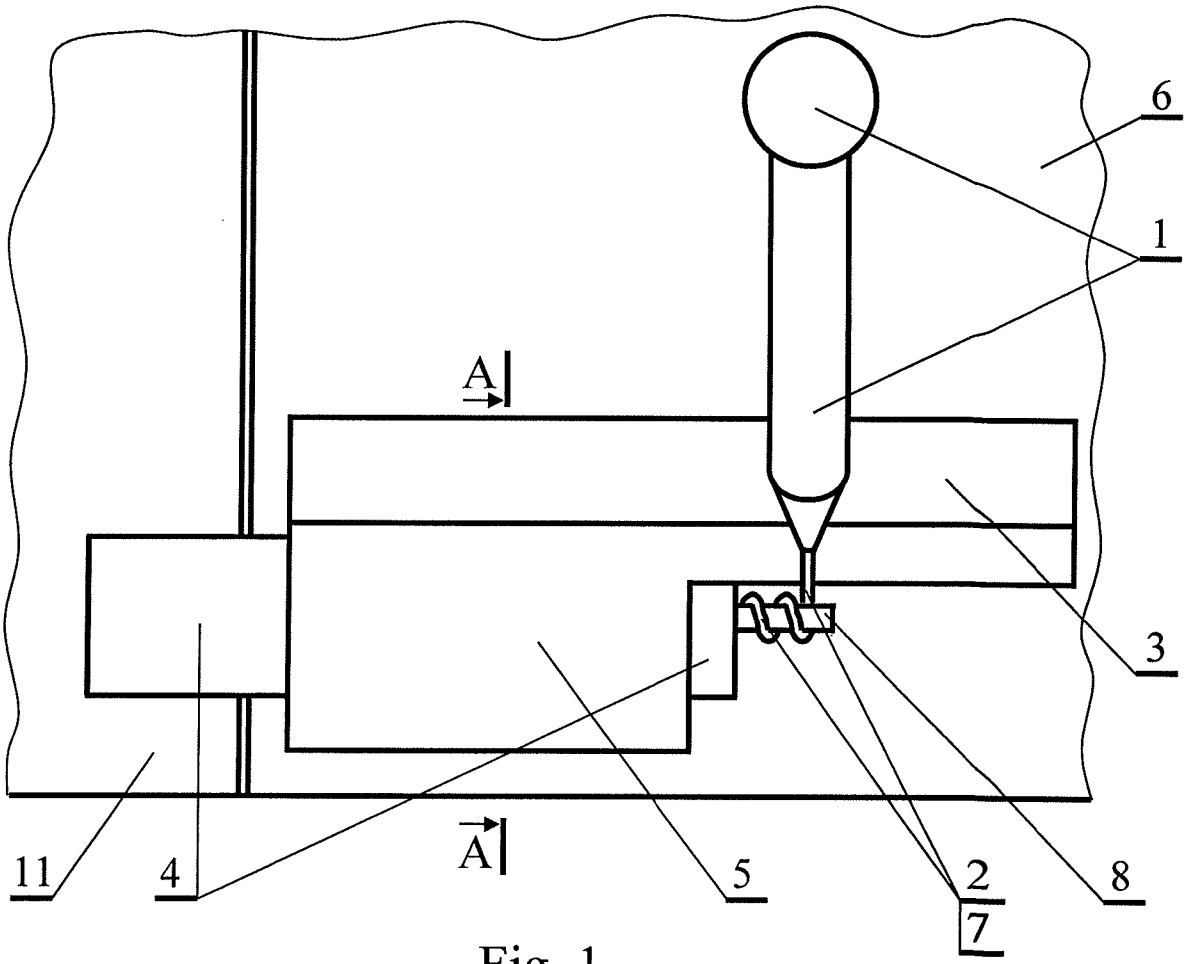

Fig. 1

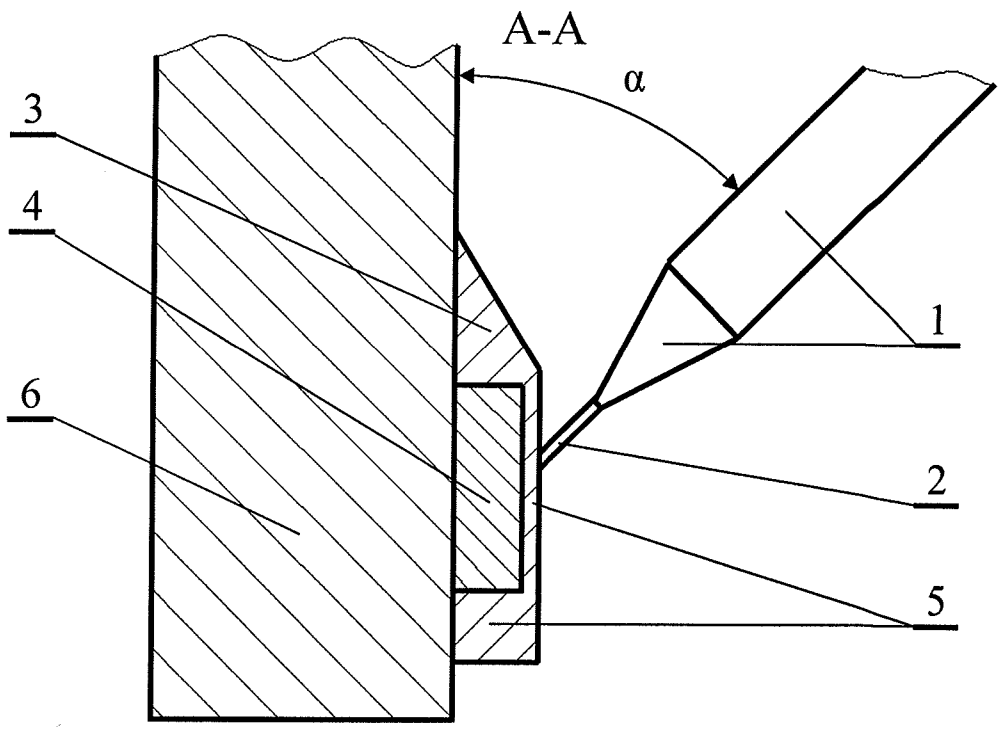

Fig. 2

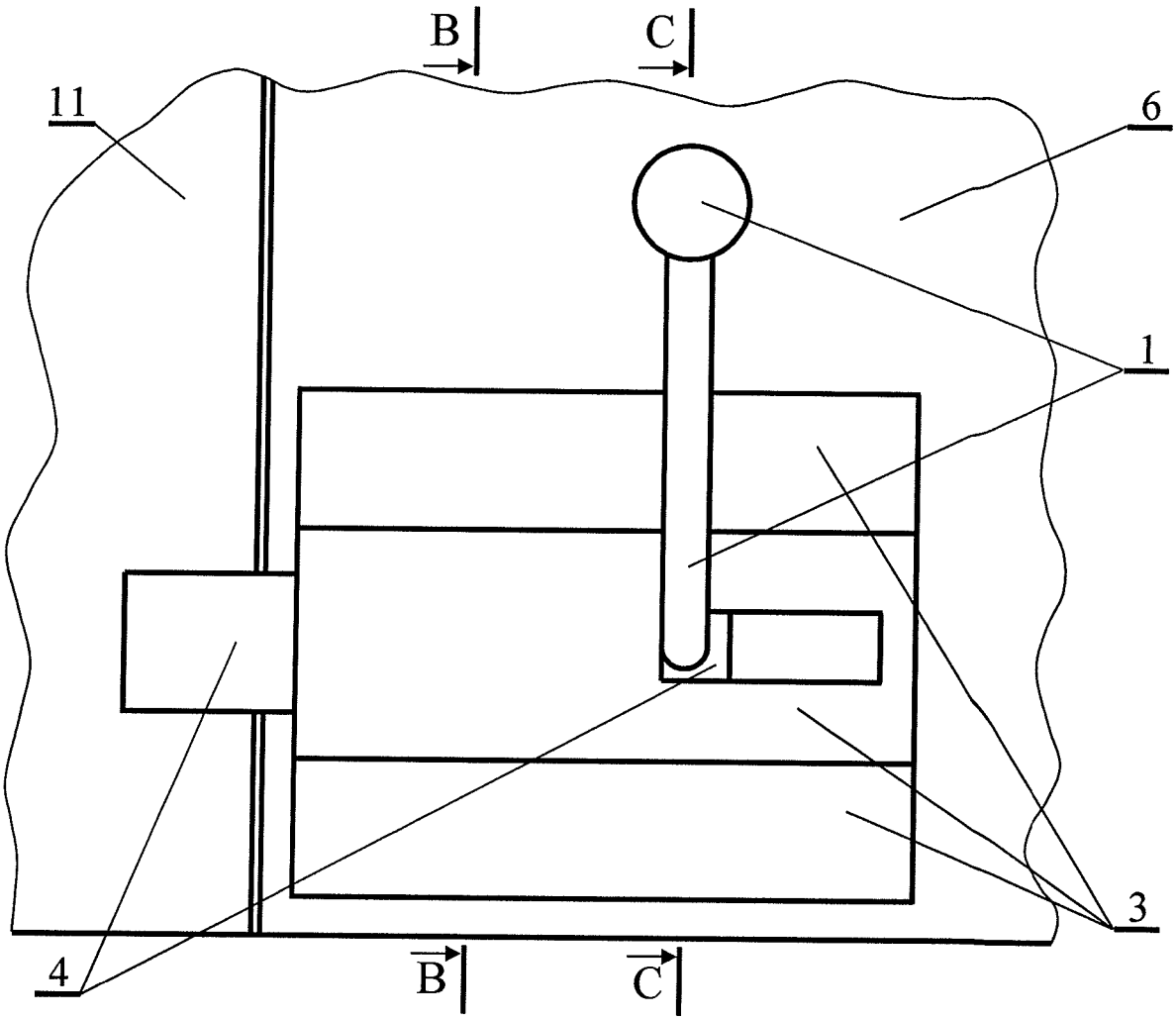

Fig. 3

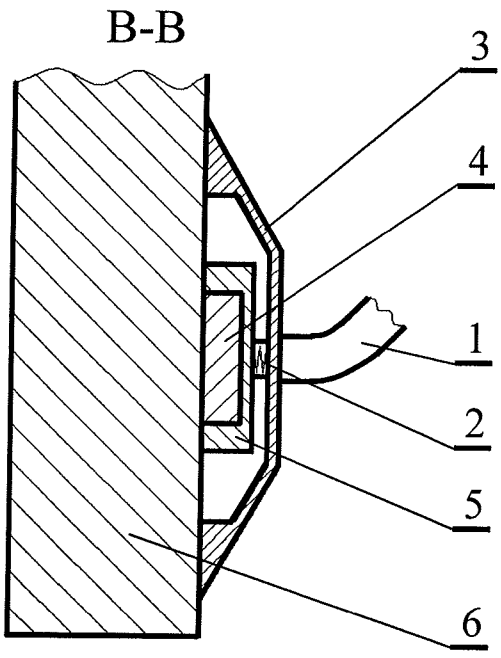

Fig. 4

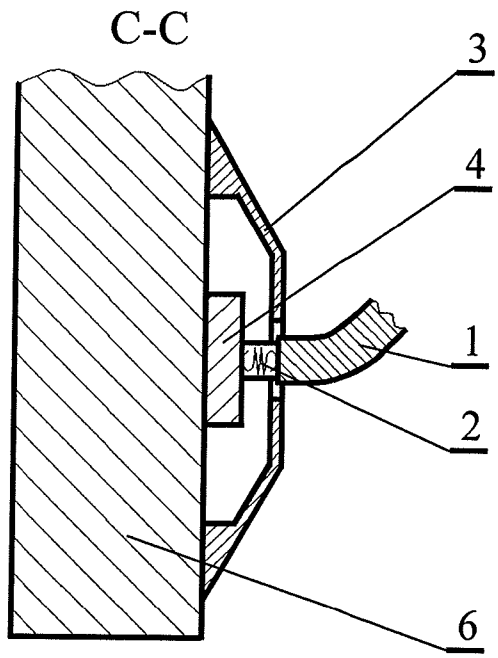

Fig. 5

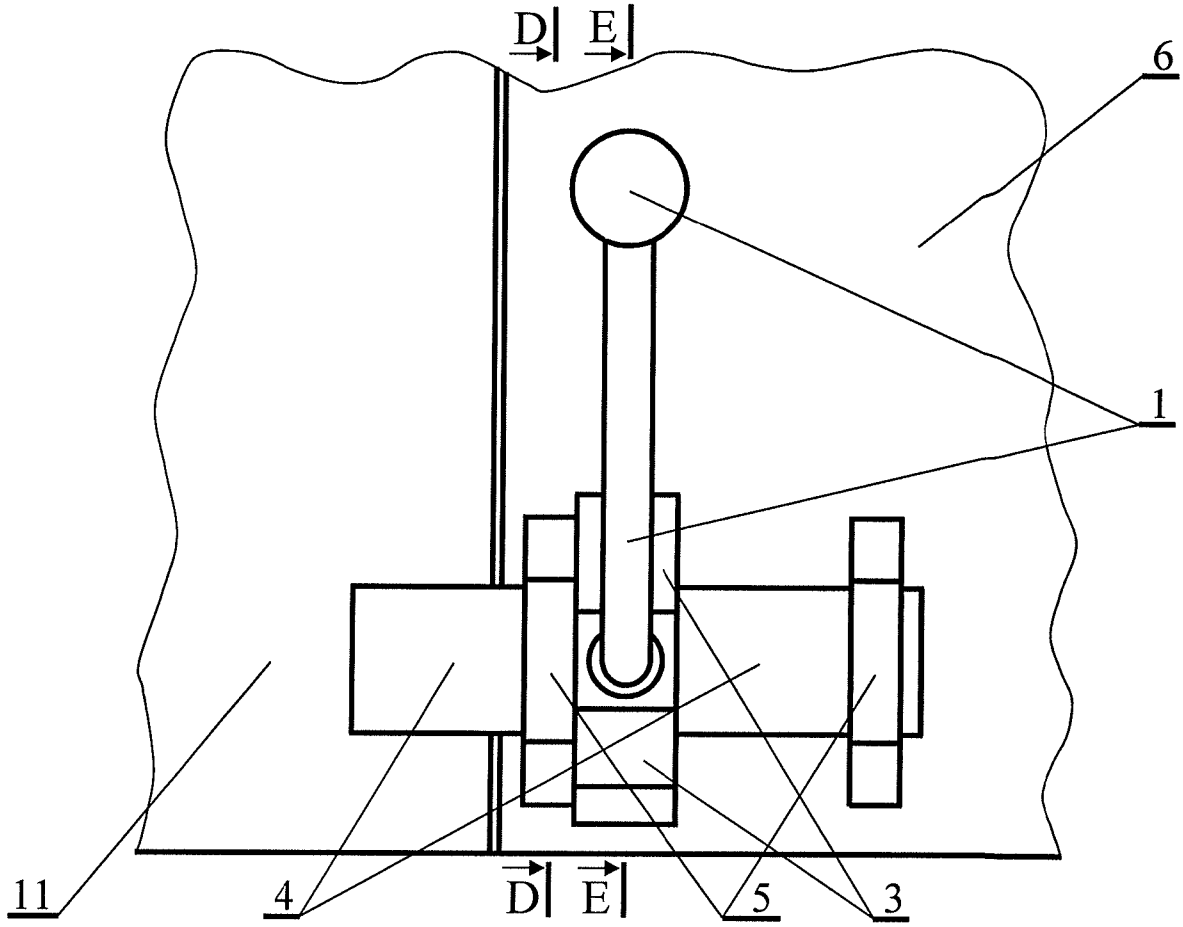

Fig. 6

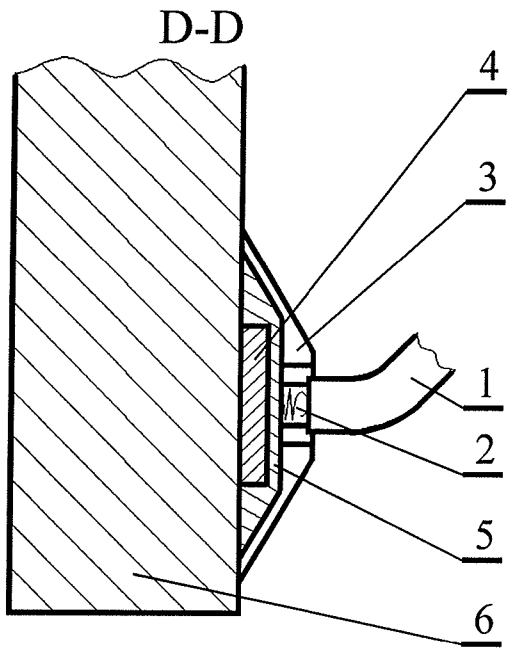

Fig. 7

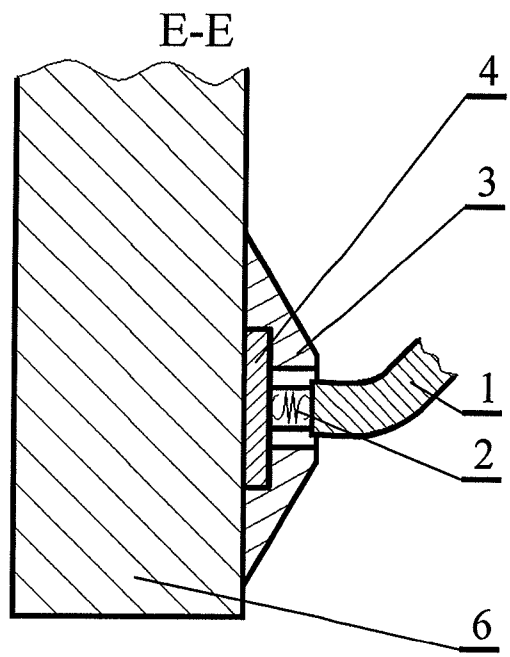

Fig. 8

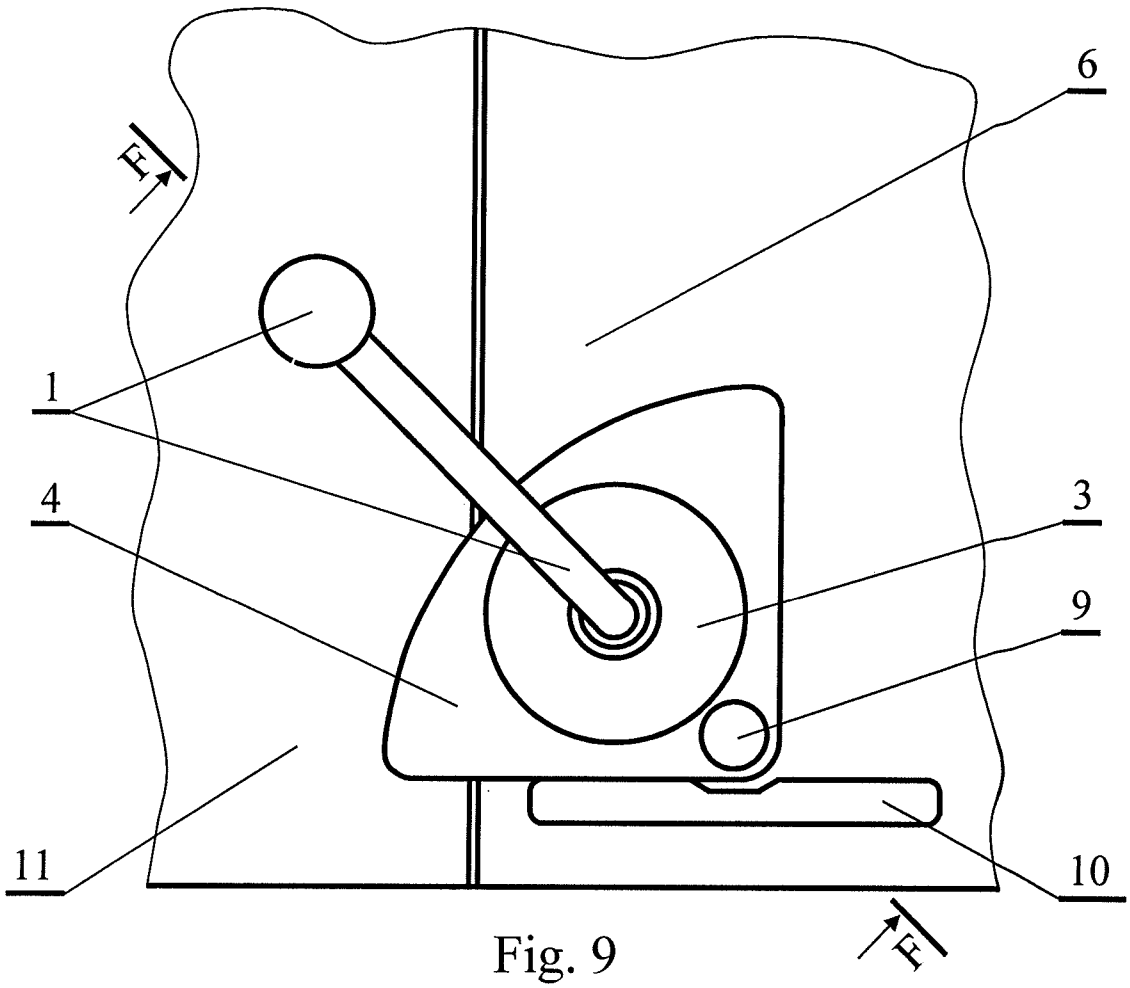

Fig. 9

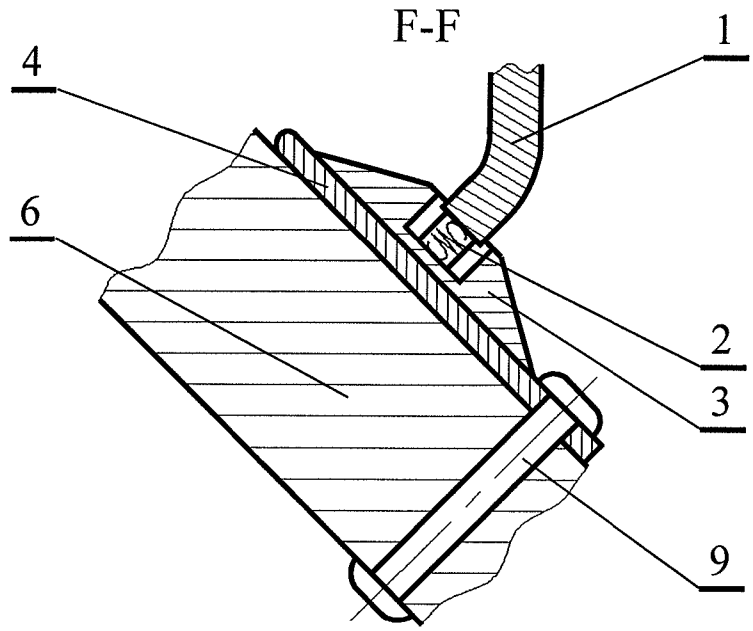

Fig. 10

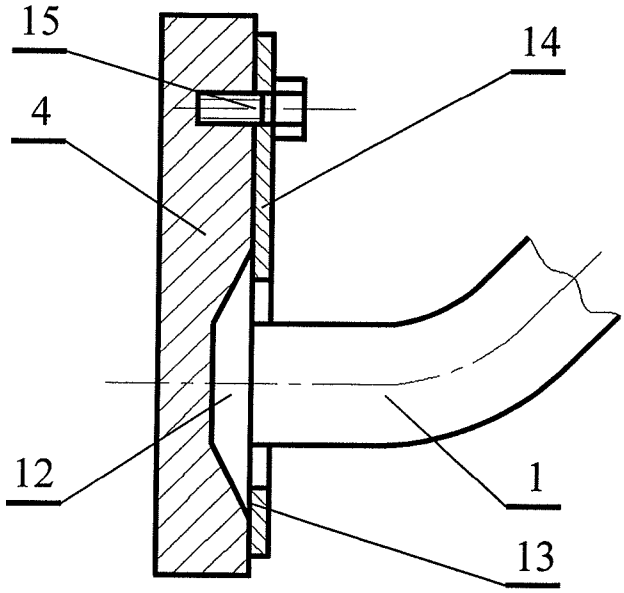

Fig. 11

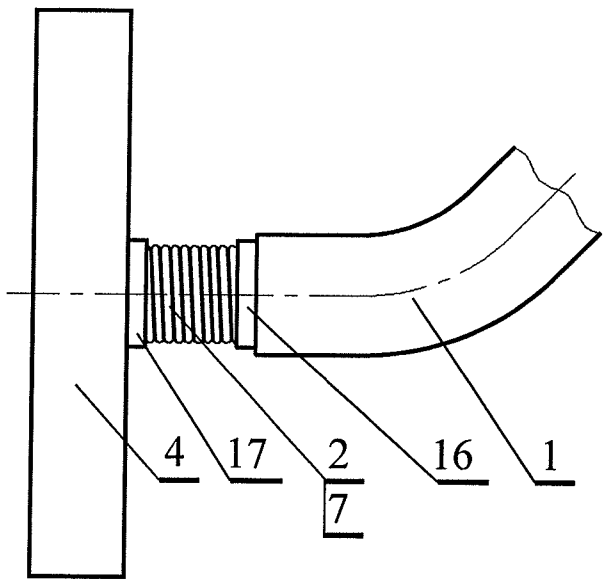

Fig. 12

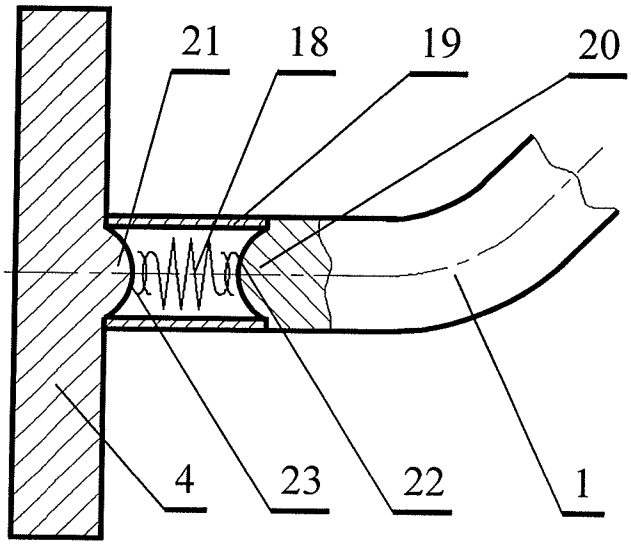

Fig. 13

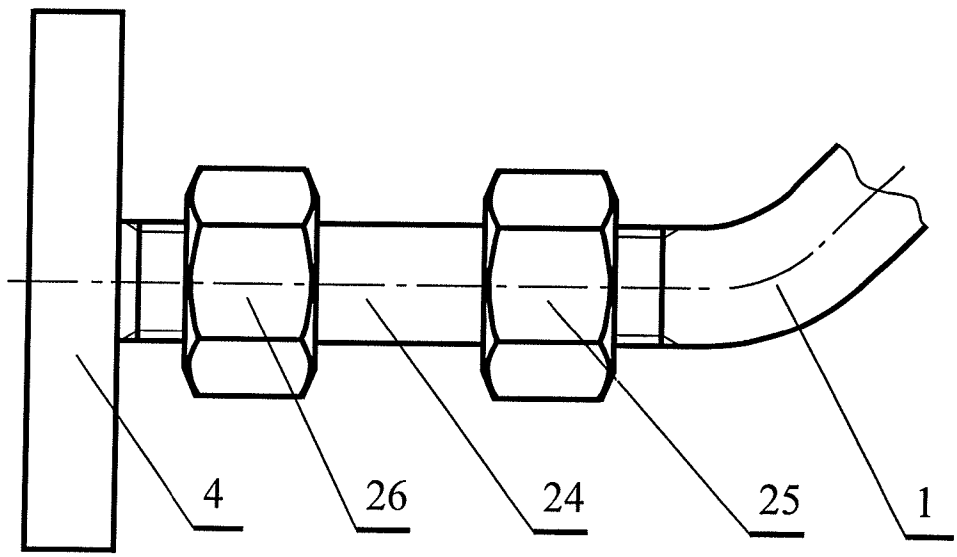

Fig. 14

INTERNATIONAL SEARCH REPORT

International application No.
PCT/PL2020/000002

A. CLASSIFICATION OF SUBJECT MATTER
E05C1/06, E05B53/00, E06B7/28

According to International Patent Classification (IPC) or to both national classification and IPC

B. FIELDS SEARCHED

Minimum documentation searched (classification system followed by classification symbols)
E05C, E05B, E06B

Documentation searched other than minimum documentation to the extent that such documents are included in the fields searched

Electronic data base consulted during the international search (name of data base and, where practicable, search terms used)

Espacenet; EPODOC, WPI, English full-text databases via EPOQUENET; Polish Patent Office databases

C. DOCUMENTS CONSIDERED TO BE RELEVANT

Category*	Citation of document, with indication, where appropriate, of the relevant passages	Relevant to claim No.
A	US2012119521A1 (LEHR ROBERT JOSHUA, US) 2012.05.17	1-7
A	US2018073288A1 (WEBSTER KEVIN, US) 2018.03.15	1-7
A	CN104141429A (ZHANG YIBING, CN) 2014.11.12	1-7

☐ Further documents are listed in the continuation of Box C. ☒ See patent family annex.

* Special categories of cited documents:
"A" document defining the general state of the art which is not considered to be of particular relevance
"E" earlier application or patent but published on or after the international filing date
"L" document which may throw doubts on priority claim(s) or which is cited to establish the publication date of another citation or other special reason (as specified)
"O" document referring to an oral disclosure, use, exhibition or other means
"P" document published prior to the international filing date but later than the priority date claimed
"T" later document published after the international filing date or priority date and not in conflict with the application but cited to understand the principle or theory underlying the invention
"X" document of particular relevance; the claimed invention cannot be considered novel or cannot be considered to involve an inventive step when the document is taken alone
"Y" document of particular relevance; the claimed invention cannot be considered to involve an inventive step when the document is combined with one or more other such documents, such combination being obvious to a person skilled in the art
"&" document member of the same patent family

Date of the actual completion of the international search	Date of mailing of the international search report
22 May 2020 (22.05.2020)	22 May 2020 (22.05.2020)

Name and mailing address of the ISA/
Visegrad Patent Institute / Branch Office PL
Al. Niepodległości 188, 00-950 Warsaw, Poland
Facsimile No. +48 22 579 00 01

Authorized officer
Jan Wyrkowski
Telephone No. +48 22 579 02 40

Patent document cited in search report	Publication date	Patent family member(s)	Publication date
US2012119521A1	2012.05.17	US8888149B2	2014.11.18
US2018073288A1	2018.03.15	none	-
CN104141429A	2014.11.12	none	-