Aug. 4, 1936. G. J. HYDE 2,049,776

GUN

Filed April 24, 1935 3 Sheets-Sheet 1

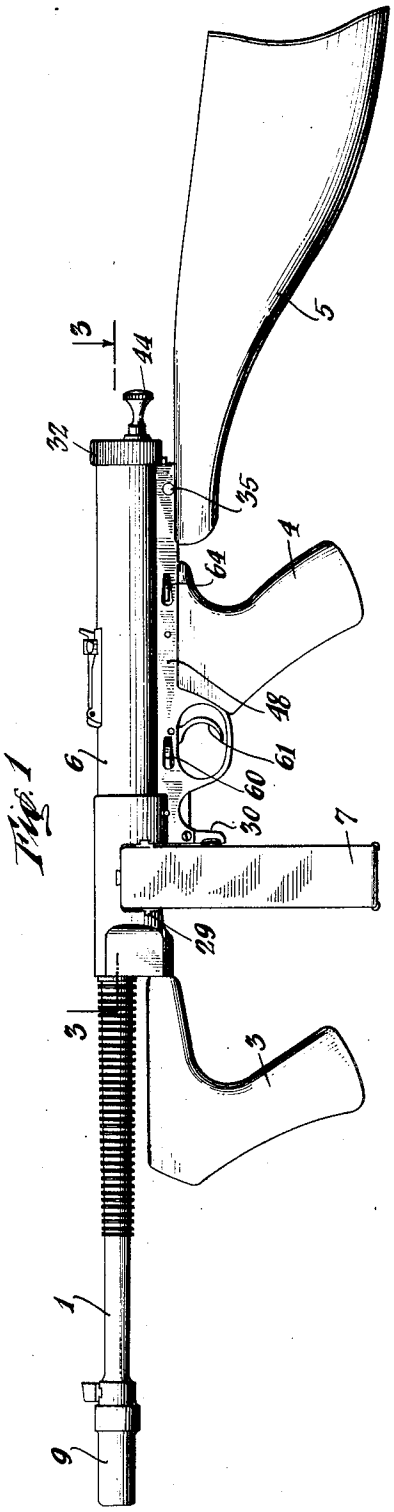

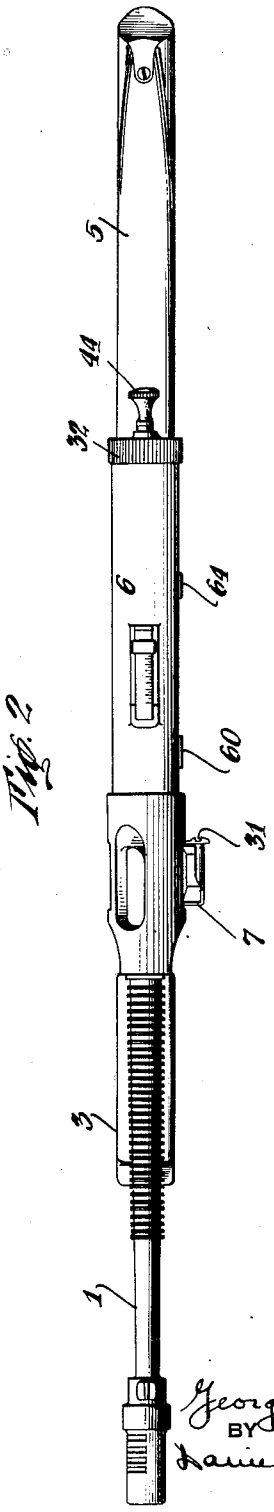

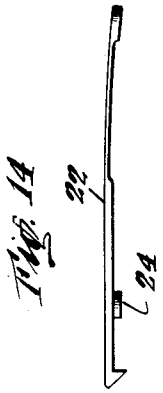

INVENTOR
George John Hyde
BY
Daniel L. Morris.
ATTORNEY

Aug. 4, 1936. G. J. HYDE 2,049,776

GUN

Filed April 24, 1935 3 Sheets-Sheet 2

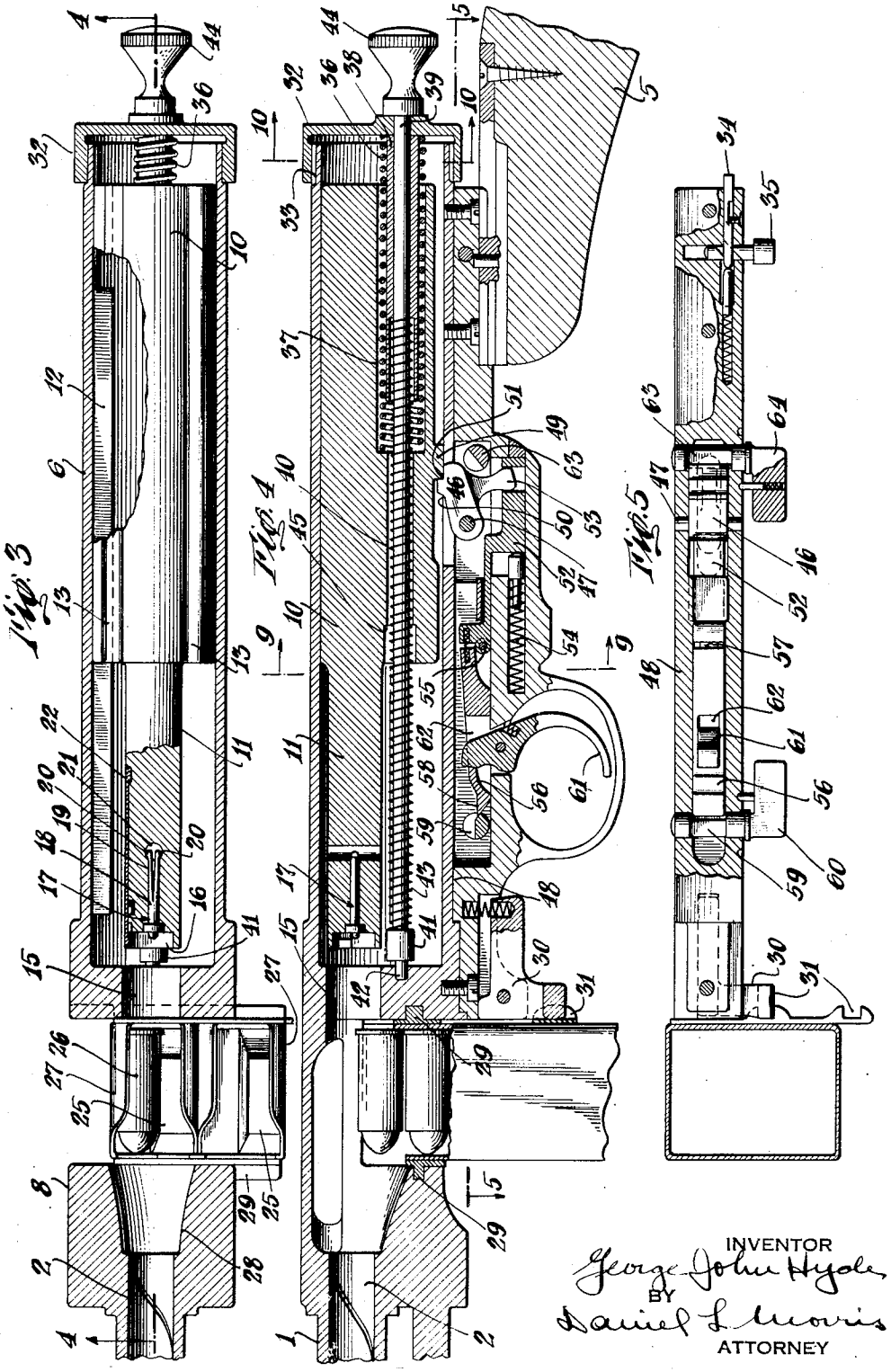

INVENTOR
George John Hyde
BY
Daniel L. Morris
ATTORNEY

Aug. 4, 1936. G. J. HYDE 2,049,776

GUN

Filed April 24, 1935 3 Sheets-Sheet 3

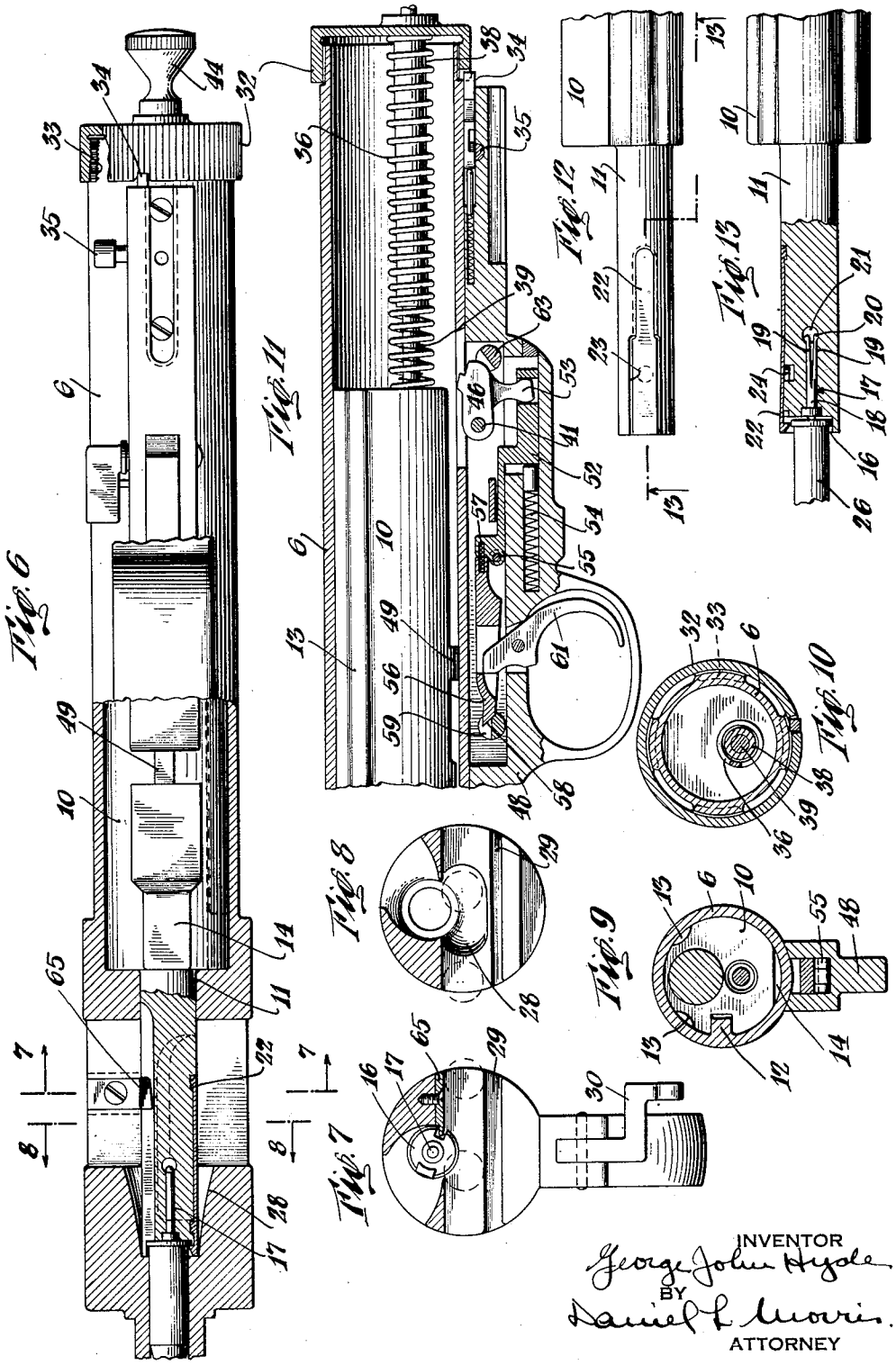

INVENTOR
George John Hyde
BY
Daniel L. Morris
ATTORNEY

Patented Aug. 4, 1936 2,049,776

UNITED STATES PATENT OFFICE

2,049,776

GUN

George John Hyde, Brooklyn, N. Y., assignor of one-fourth to Jean U. Koree, New York, N. Y.

Application April 24, 1935, Serial No. 17,899

11 Claims. (Cl. 42—3)

This invention relates to guns of the type in which the breech block or bolt is either automatically or controllably actuated, and in which the breech block is moved to the firing position under the influence of a spring and into the retracted position under the influence of the chamber pressure.

It is an object of the invention to so balance the gun that the reaction due to the recoil of the breech block will be greatly minimized.

It is a further object of the invention to provide a breech mechanism that is extremely simple in its construction and in its operation, and which will coact with the frame of the gun in such a way as to assist in the balancing of the gun and the reduction of the effect of the recoil action of the breech block.

I shall not attempt to enumerate all of the objects of this invention, as they will appear from the description of the construction and operation.

I have disclosed one embodiment of the invention in the drawings, in which

Figure 1 is a side elevation of the complete gun;

Fig. 2 is a top plan view of the same;

Fig. 3 is an enlarged horizontal sectional view taken on the line 3—3 of Fig. 1 with the breech block in its retracted position;

Fig. 4 is an enlarged vertical sectional view taken in the plane of line 4—4 of Fig. 3;

Fig. 5 is a horizontal sectional view on the line 5—5 of Fig. 4 showing the sear-operating mechanism;

Fig. 6 is an enlarged view, partly in section, looking at the underside of the receiver with the breech block in its forward or firing position;

Fig. 7 is a vertical sectional view taken in the plane of line 7—7 of Fig. 6;

Fig. 8 is a similar view taken on the line 8—8 of Fig. 6;

Fig. 9 is a vertical sectional view taken on the line 9—9 of Fig. 4;

Fig. 10 is a vertical sectional view taken on the line 10—10 of Fig. 4;

Fig. 11 is an enlarged fragmentary sectional view showing the breech block in its firing position and the sear in the position that it occupies when the block is controllably operated;

Fig. 12 is a fragmentary view disclosing the manner in which the extractor is carried by the breech block;

Fig. 13 is a similar view, partly broken away, disclosing the mounting of the extractor and the firing pin; and

Fig. 14 is an elevation of the extractor.

The gun that I have illustrated includes a barrel 1 having the usual rifled chamber 2, a fire grip 3, a rear grip 4, a stock 5, a receiver 6, and a magazine 7.

The receiver 6, as will be seen in Figs. 3 and 4, is substantially tubular throughout the greater portion of its length and is relatively light. The forward end of the receiver, however, which constitutes the magazine carrier and which is directly adjacent the chamber, is relatively larger and heavier than the tubular portion of the receiver and is thus made for the purpose of assisting in the balancing of the gun to counteract to some extent the reaction of the recoil of the breech block.

The barrel 1 is preferably made longer than the usual barrel, and because of its increased length it will, either with or without a compensator 9, further assist in the balancing of the gun.

The breech block or bolt 10 is substantially cylindrical in form and is provided with an extension 11. The breech block snugly fits within, and is of course slidable within, the receiver 6 and is prevented from rotative movement by the engagement of a guide 12 within the receiver in a longitudinal slot in the breech block. The friction between the breech block and the inner face of the receiver is reduced by the presence of grooves 13 in the face of the block and by the cut-away portion 14 at the lower side of the block.

The extension 11 of the breech block is adapted to be projected through an opening 15 in the forward end of the tubular section of the receiver 6 so that it may act as a closure for the chamber 2. This extension is recessed at 16 for the reception of the base of the cartridge and carries a firing pin 17 which projects into said recess 16 in alignment with the cartridge cap, so that the detonator may be exploded when the breech block reaches the forward end of its movement.

The firing pin 17 carries a shank 18 which is bifurcated to provide legs 19 that are resiliently urged apart, on the ends of which legs are cams 20. This shank 18 fits within a bore in the extension 11 of the breech block, which bore is intersected by a transverse hole 21, into which the cams 20 extend. These cams maintain the firing pin in position but permit the ejection of the firing pin by the insertion of a proper tool in the hole 21, so that it may be replaced, as desired.

The extension 11 of the breech block also carries an extractor 22 that fits into a groove 23 that has its edges undercut, and is held in the groove by reason of the fact that the extractor is resilient and is slightly curvilinear, and is provided with a cam 24 that engages in a depression in the groove 23.

The opening 15 in the forward end of the tubular section of the receiver is aligned with the chamber 2, and interpolated between this opening and the chamber is the ejection end of the magazine 7. The magazine that I have illustrated includes a hopper with spring-pressed followers 25 which feed the cartridge 26 beneath the retention lips 27 slightly to the side of the axial line of the chamber 2, the opening 15 and the firing pin 17. In this position the cartridge is engageable by the extension 11 of the breech block and is capable of being moved forwardly by said extension until it engages the cam face 28 that leads to the chamber 2. This cam face acts to guide the cartridge into the chamber and also to align the base of the cartridge with the chamber 16 in the extension 11 of the breech block, so that the rim at the base of the cartridge will be engaged by the extractor 22 and the detonator will be aligned with the firing pin 17.

The magazine is mounted for lateral adjustment by means of the rib and groove arrangement 29 shown in Fig. 4. Thus it may be supplied with several raceways for the cartridges which may be shifted laterally into such position that the cartridges may be picked up by the forward extension 11 of the breech block. The magazine is held in its lateral adjusted positions by the engagement of a spring-pressed detent 30 in one of a series of notches 31 carried by the magazine.

The receiver 6 is closed at its rear end by cap or closure 32 which is mounted on the receiver by means of interrupted threads 33 and is locked in its closed position by spring-pressed detent 34 which is controlled by a button 35. A recoil spring 36 is interposed between the closure 32 and the breech block 10, extending into a recess 37 in the breech block and abutting against the closure 32. A sleeve 38 is located within the recoil spring 36 and extends into the recess 37 but is shorter than the latter. A cocking rod 39 extends slidably through an opening in the closure 32, slidably through the sleeve 38, and through a bore 40 which is a smaller continuation of the recess 37. This cocking rod extends throughout the length of the tubular section of the receiver 6 and is at its forward end provided with a head 41 and a nib 42. The nib 42 is adapted to seat in a socket in the forward end of the tubular section of the receiver 6 and is urged into this position by spring 43 which surrounds the rod, abuts against the head 41, extends through the bore 40 and the recess 37, and into the sleeve 38, as shown in Fig. 4 of the drawings. Thus the cocking rod 39 is operable independently of the breech block. However, when this cocking rod is drawn rearwardly by means of the knob 44 on the end of the rod, the head 41 engages an abutment 45 in the breech block 10. The continued withdrawal of the cocking rod will move the breech block rearwardly against the action of the recoil spring and into a cocked position, such as shown in Figs. 3 and 4.

The breech block is held in its cocked position by sear 46 which is pivoted at 47 in the trigger plate 48. This sear 46 is adapted to be projected into the line of movement of an abutment 49 on the breech block and is provided with a cam face 50, over which the abutment passes as the breech block moves rearwardly. The sear is also provided with a locking face 51 which engages the abutment 49 and prevents the forward movement of the breech block until the sear is retracted.

The sear 46 is actuated as follows:—A slide 52 is mounted within the recess in the trigger plate 48 and is engaged with an arm 53 of the sear. This slide 52 is urged rearwardly by a spring 54 so that normally the sear is urged into the path of movement of the breech block. Pivoted to the slide 52 at 55 is an articulate section 56, the forward end of which is normally urged into a downward position by a spring 57. This articulate section 56 of the slide is provided at its forward end with a cam 58 which coacts with a manually-controllable cam 59 having a thumb piece 60 on the outside of the trigger plate, in a manner that will later appear. The trigger 61 projects into an opening 62 in the articulate section 56 of the slide in such manner that when the trigger is actuated, it either moves the slide forwardly and maintains it in that position as long as the trigger is held, so that the sear will be held in its retracted position for automatic operation of the breech block, or it moves it forwardly and becomes disengaged from the slide, so that the slide may return to its initial position under the influence of the spring 54, and the sear will be returned to its locking position to maintain the breech block in its retracted position.

A sear lock in the form of a cam 63 is provided with a finger piece 64. By means of this lock the sear may be locked in the position that it occupies when it maintains the breech block in its cocked position whether the cam 59 is adjusted for either automatic or controllable operation of the breech block.

It is to be noted that the only openings in the tubular section of the receiver are the opening 15 that is closed by the breech block, the opening through which the cocking rod 39 extends and by which it is closed, and the opening through which the sear 46 extends, and which latter opening is closed by the trigger plate. Thus the breech mechanism is well protected and insured against the presence of foreign substances.

It will be realized that with this construction there will be a tendency of the breech block to build up a pressure between the breech block and the closure 32 when the breech block moves towards said closure by the compression of the air within the tubular section of the receiver and behind the breech block. The breech block will have the contrary action as it moves in the opposite direction, for it will tend to create a vacuum within the space between its rear end and the closure 32. It will be realized that the result of this alternate building up and reducing of the pressure will tend to slow up the action of the breech block. I have taken advantage of these actions of the breech block to control the rapidity of reciprocation of the breech block. It is obvious that if the space between the rear end of the breech block and the closure 32 were completely closed, the reciprocation of the breech block would be retarded to the greatest extent. It is also obvious that if the space between the breech block and the closure 32 were completely open, there would be no retardation. Taking these two factors into consideration, I have pro-

vided the breech block with the longitudinal vents 13 which permit the escape of the air from the space between the breech block and the closure 32 as the breech block moves toward said closure, and also permit the influx of the air into said space as the breech block moves in the opposite direction. Thus there will be a tendency to destroy the pressure, on the one hand, and the vacuum, on the other. By varying the size of the vents 13 the rapidity of the efflux or the influx of the air may be controlled and thus the rapidity of the reciprocation of the breech block controlled.

The breech block comes to rest before it contacts with the closure 32 and before the recoil spring is compressed to its ultimate extent because of the balance that is established between the weight of the breech block and the chamber pressure, the effect of which is supplemented by the cushioning action created by the compression of the air at the rear of the breech block.

In operation, assuming the parts to be in the position shown in Fig. 6, the cocking rod 39 is withdrawn rearwardly against the action of the spring 43 until the head 41 engages the shoulder or abutment 45. A continued withdrawal of the cocking rod moves the breech block 10 rearwardly against the action of the recoil spring 36 until the abutment 49 engages the locking face 51 of the sear 46. When thus engaged the block will be in its retracted or cocked position and the parts will be in the positions shown in Figs. 3 and 4.

When the cocking rod 39 is released it will travel forwardly under the influence of the spring 43 and the nib 42 will seat. The rod in this position will remain stationary during the reciprocation of the breech block whether that reciprocation be automatic or controlled.

When the sear 46 is withdrawn from the path of travel of the breech block 10, the breech block will move forwardly under the influence of the recoil spring 36 and the extension 11 will pass through the opening 15 until the forward end of the extension engages the base of the cartridge 26. The continued forward movement of the extension will move the cartridge from the magazine forwardly toward the chamber 2 and the cam 28 will align the cartridge with the chamber and with the recess 16 in the forward end of the extension 11. When the rim of the shell engages the shoulder at the rear end of the chamber 2, the base of the cartridge will be forced into the recess 16 of the extension 11 of the breech block and will be snapped beneath the extractor 22 so that the hook on the end of the extractor engages the rim. At the same time the firing pin 17 will engage and explode the detonator.

The chamber pressure exerted against the extension 11 of the breech block will then cause the breech block to move rearwardly against the action of the recoil spring 36 and the spent shell will be extracted from the chamber 2. As the base of the shell engages the ejector 65, the rim of the shell is disengaged from the extractor 22 and the shell is forced from the recess 16 to pass from the ejection opening in the receiver.

As the breech block moves rearwardly the abutment 49 engages the cam face 50 of the sear 46 and depresses the sear. The breech block is then in position either to move automatically forwardly or to be arrested in that movement for controlled operation.

First explaining the operation of the trigger mechanism when it is desired to have the breech block moved forwardly under the control of the operator, the parts are in the positions shown in Fig. 4 with the cam 59 in such position that as the slide 52 moves forwardly, the cam 58 will ride up over the cam 59. As it does so under the influence of a force applied to the trigger 61, the trigger extension will, after the slide has been pushed forwardly far enough to retract the sear 46, disengage the slide and permit the slide to move rearwardly automatically under the influence of the spring 54, so that the sear will again be projected into the path of travel of the breech block and will lock the breech block in its rearward position when it arrives in that position under the influence of the chamber pressure. The positions of the trigger mechanism elements, as the cam 58 rides over the cam 59 and the sear 46 is retracted, are shown in Fig. 11 of the drawings, Fig. 4 of the drawings showing the relative positions of the elements prior to the movement of the cam 59, and while the sear is maintaining the breech block in its rear position.

When, however, the position of the cam 59 is reversed through the finger piece 60, the cam 58 will pass beneath the cam 59 and the trigger extension will continuously engage the articulate section of the slide 52, so that as long as the trigger is held the sear will be held in its depressed position and the breech block will be free to move rearwardly under the influence of the chamber pressure and forwardly under the influence of the recoil spring 36 automatically.

It will be seen that by making a portion of the breech block relatively heavy, the breech block coacting with the barrel and the forward heavy end of the receiver will not only balance the gun as an inert body, but will also counterbalance the reaction which flows from the rear movement of the breech block under the influence of the chamber pressure, so that very little force will be transmitted to the shoulder of the operator.

Moreover, it is to be observed that the breach mechanism is extremely simple, possessing relatively few movable parts, so that the likelihood of it becoming inoperative is greatly minimized, and yet the parts are so arranged and so actuated that their operation will be positive and rapid.

While I have illustrated a particular construction, this is merely for the purpose of disclosing my invention and I do not intend to be limited to that particular construction, except in so far as it is necessitated by the claims.

What I claim is:—

1. A gun, including a receiver, a breech block slidable in the receiver and having a recess in one end thereof, and a firing pin removably held in said recess, said firing pin being resilient and bifurcated to grip the walls of the recess.

2. A gun, including a receiver, a breech block slidable in the receiver and having a recess in one end thereof, and a firing pin removably held in said recess, said firing pin being resilient and bifurcated to grip the walls of the recess, said breech block having a transverse opening intersecting said recess, the bifurcated end of the firing pin having a cam lock thereon protruding into said opening to lock the firing pin into position.

3. In a gun, a receiver, a breech block of cross sectional dimensions substantially equal to the inside cross sectional dimensions of the receiver

and slidable therein, resilient means for moving the breech block in one direction, a firing pin carried by the forward end of the breech block, a cocking rod extending through the rear wall of the receiver, said cocking rod being movable relatively to and with the breech block and being spring-actuated into its inoperative position, and a trigger controlled sear for holding block in cocked position against the action of said resilient means.

4. In a gun, a receiver, a breech block of cross sectional dimensions substantially equal to the inside cross sectional dimensions of the receiver and slidable therein, resilient means for moving the breech block in one direction, a firing pin carried by the forward end of said breech block, a cocking rod extending through the rear wall of the receiver, said cocking rod being movable relatively to and with the breech block and spring actuated into its inoperative position, means for positioning the rod during the operation of the breech block, and a trigger controlled sear for holding the breech block in cocked position against the action of its resilient actuating means.

5. In a gun, a receiver closed at its rear end by a removable cap, a breech block in said receiver and including a rear portion and a forward extension, eccentric with respect to the longitudinal axis of the rear portion, a recoil spring interposed between the rear portion of the breech block and said cap, a cocking rod extending longitudinally through the rear portion of the breech block and through the cap, a seat in the forward end of the receiver for receiving the end of the cocking rod and resilient means for normally urging the forward end of the cocking rod into said seat, the cocking rod having lost motion in respect to the breech block whereby the breech block may move independently of the cocking rod, the cocking rod being adapted to engage the breech block whereby the latter may be drawn into its cocked position.

6. In a gun, a receiver closed at one end, a breech block mounted in said receiver and adapted to reciprocate therein and of cross sectional dimensions substantially equal to the inside cross sectional dimensions of the receiver, and a vent of constant capacity in the breech block continuously establishing communication of the space between the breech block and the closed end of the receiver with the atmosphere whereby the breech block is adapted to act as an air compression piston in its movement toward the closed end of the receiver.

7. In a gun, a receiver having a closed rear end, a breech block of cross sectional dimensions substantially equal to the inside cross sectional dimensions of the receiver and adapted to reciprocate within said receiver, a firing pin rigidly carried by the forward end of the breech block, resilient means for projecting the breech block in the forward direction, and a vent of constant capacity in the breech block continuously establishing communication of the space between the rear end of the breech block and the closed end of the receiver and the atmosphere whereby the breech block is adapted to act as an air piston in its movement toward the rear end of the receiver.

8. In a gun, a receiver having a closed rear end, a breech block of cross sectional dimensions substantially equal to the inside cross sectional dimensions of said receiver and adapted to reciprocate within said receiver, means for projecting the receiver in a forward direction, said breech block having a vent of constant capacity therein continuously establishing communication of the space between the rear end of the breech block and the closed end of the receiver and the atmosphere whereby the breech block is adapted to act as an air piston in its movement toward the rear end of the receiver.

9. In a gun, a receiver having a closed rear end, a breech block of cross sectional dimensions substantially equal to the inside cross sectional dimensions of the receiver and adapted to reciprocate within said receiver, means for projecting the breech block in the forward direction, means for locking the breech block in its rearmost position, said breech block having a vent of constant capacity therein continuously establishing communication of the space between the rear end of the breech block and the closed end of the receiver and the atmosphere whereby the breech block is adapted to act as an air piston in its movement toward the rear end of the receiver, and means for rendering the said holding means inoperative.

10. In a gun, a receiver, a breech block adapted to reciprocate in said receiver, a closure for one end of the receiver, a recess in the rear end of the breech block, a spring interposed between said closure and said breech block and located within said recess, a cocking rod extending through the closure and the breech block, an abutment on the end of the cocking rod remote from the closure and a spring interposed between the closure and said abutment to move the cocking rod in one direction.

11. In a gun, a receiver having a closed rear end, a breech block of cross sectional dimensions substantially equal to the inside cross sectional dimensions of said receiver and adapted to reciprocate within said receiver, means for projecting the breech block in a forward direction, said breech block having a vent of constant capacity therein continuously establishing communication of the space between the rear end of the breech block and the closed end of the receiver and the atmosphere whereby the breech block is adapted to act as an air piston in the movement toward the rear end of the receiver, a cocking rod having lost motion engagement with the breech block and a removable cover on the end of the receiver with which the cocking rod is permanently engaged, whereby the breech block, the cocking rod and the cap may be removed as a unit.

GEORGE JOHN HYDE.