Nov. 6, 1951 E. C. FOX ET AL 2,573,962

SECTIONAL DOOR

Filed May 25, 1949 3 Sheets-Sheet 1

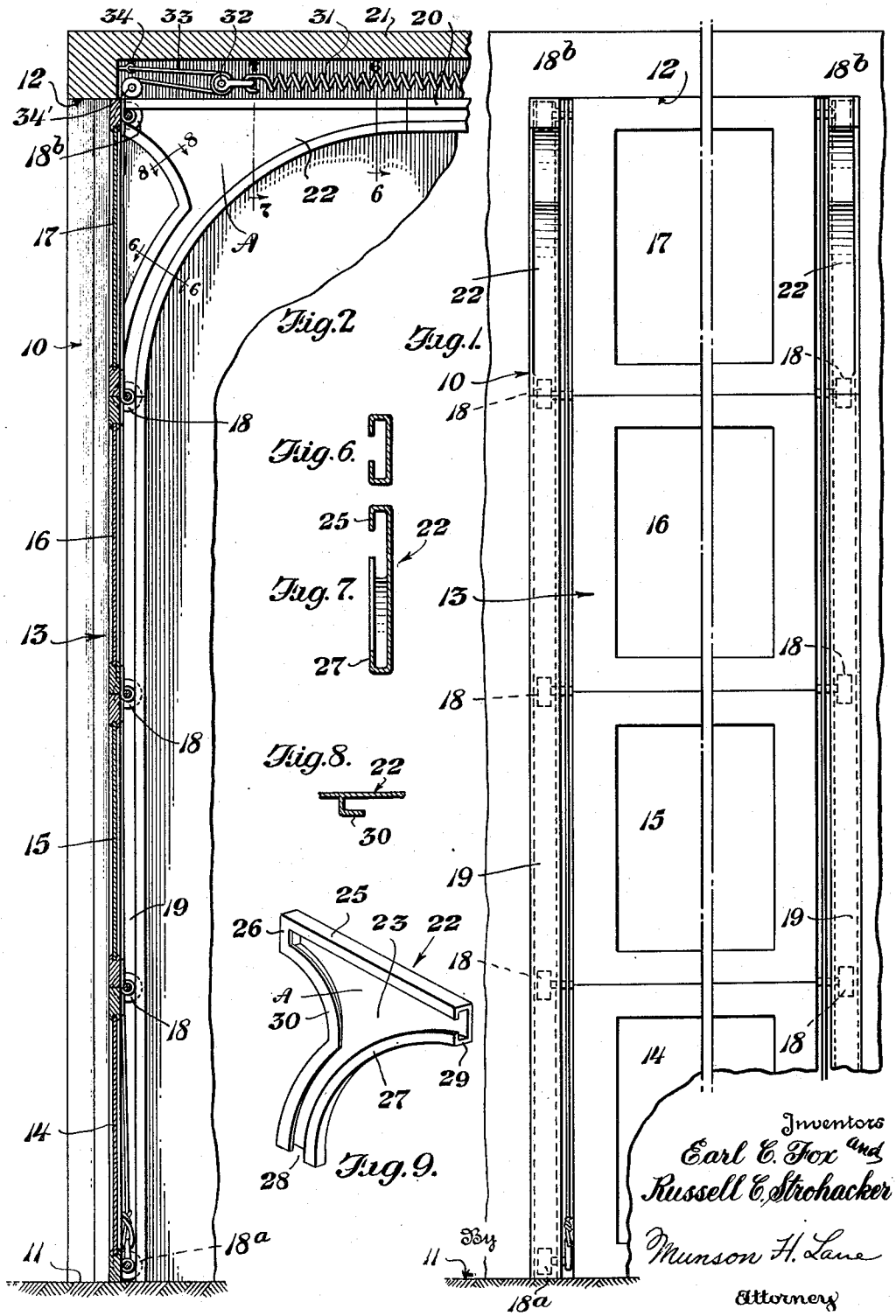

Nov. 6, 1951 E. C. FOX ET AL 2,573,962

SECTIONAL DOOR

Filed May 25, 1949 3 Sheets-Sheet 2

Fig. 3.

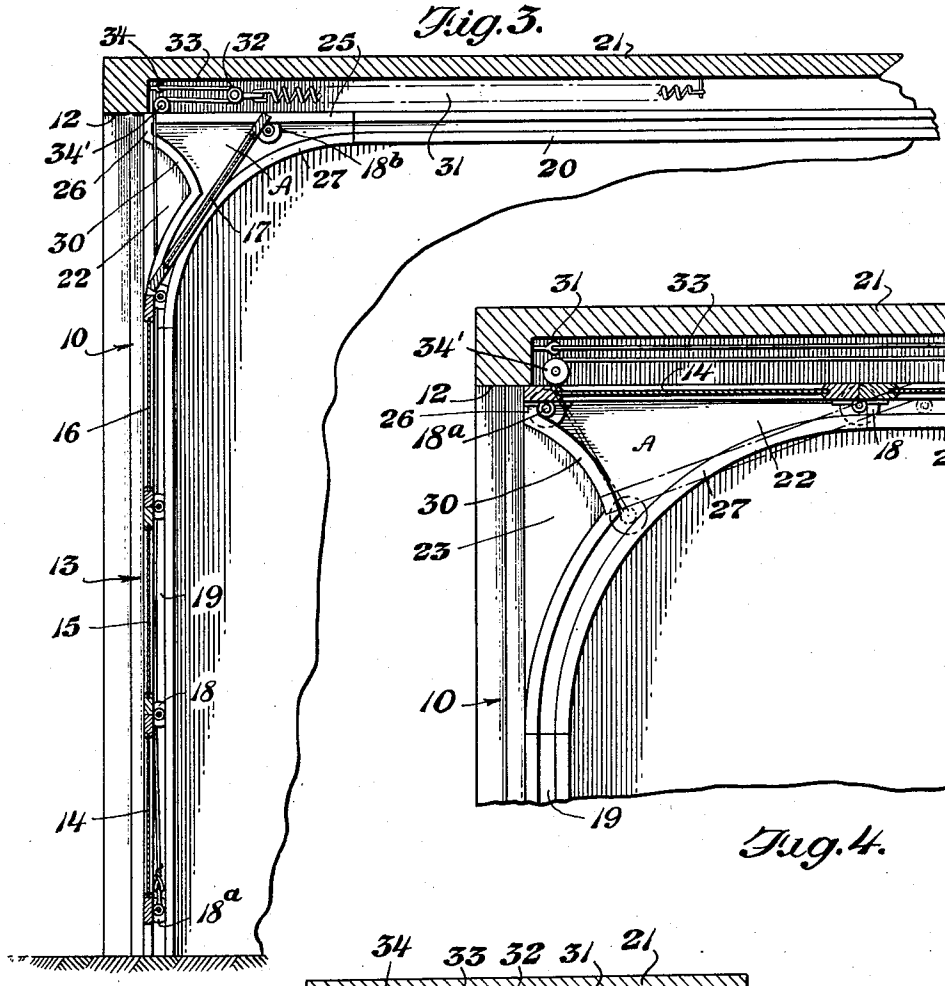

Fig. 4.

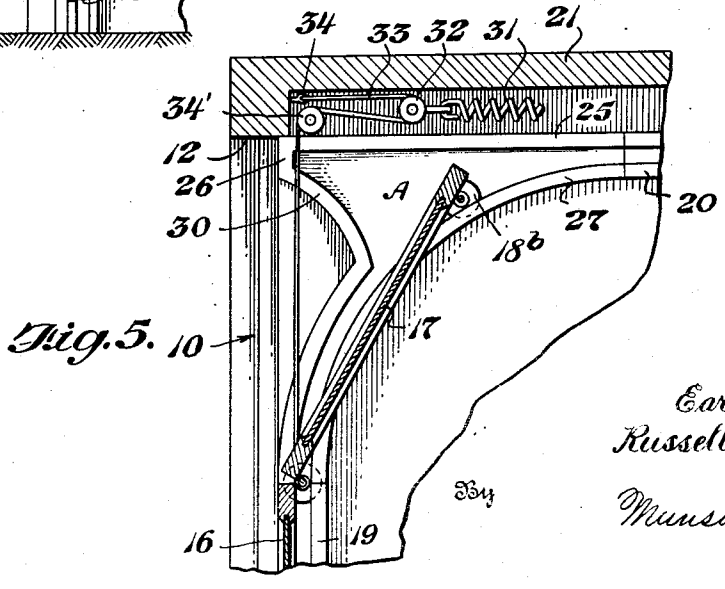

Fig. 5.

Inventors
Earl C. Fox and
Russell C. Strohacker

By
Munson H. Lane.
Attorney

Nov. 6, 1951 E. C. FOX ET AL 2,573,962

SECTIONAL DOOR

Filed May 25, 1949 3 Sheets-Sheet 3

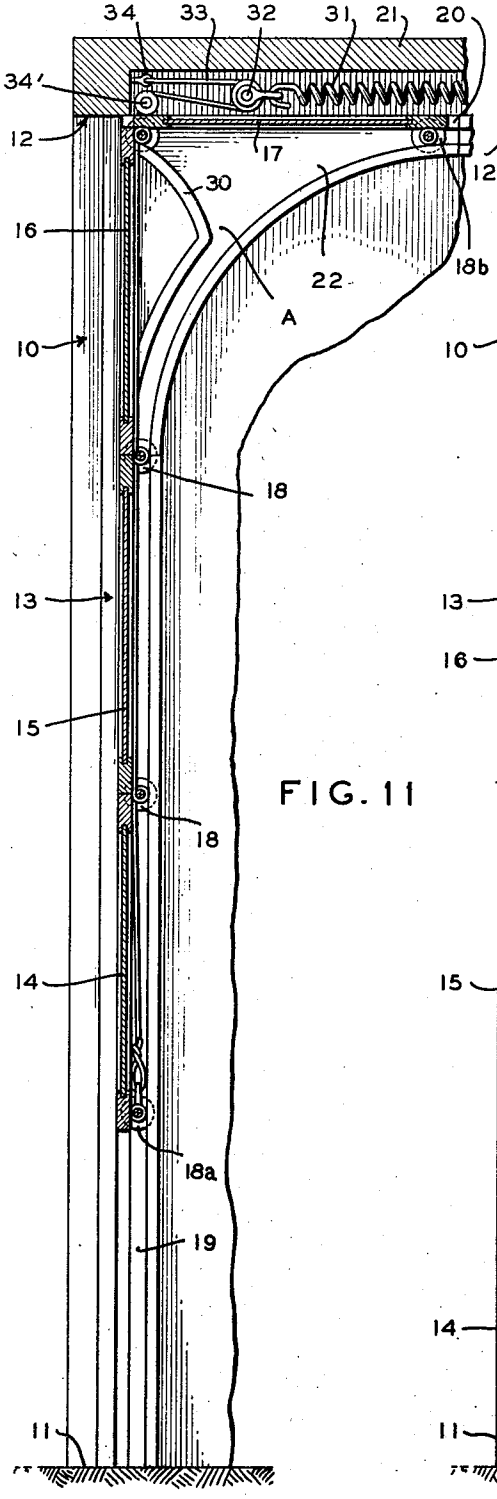

FIG. 11

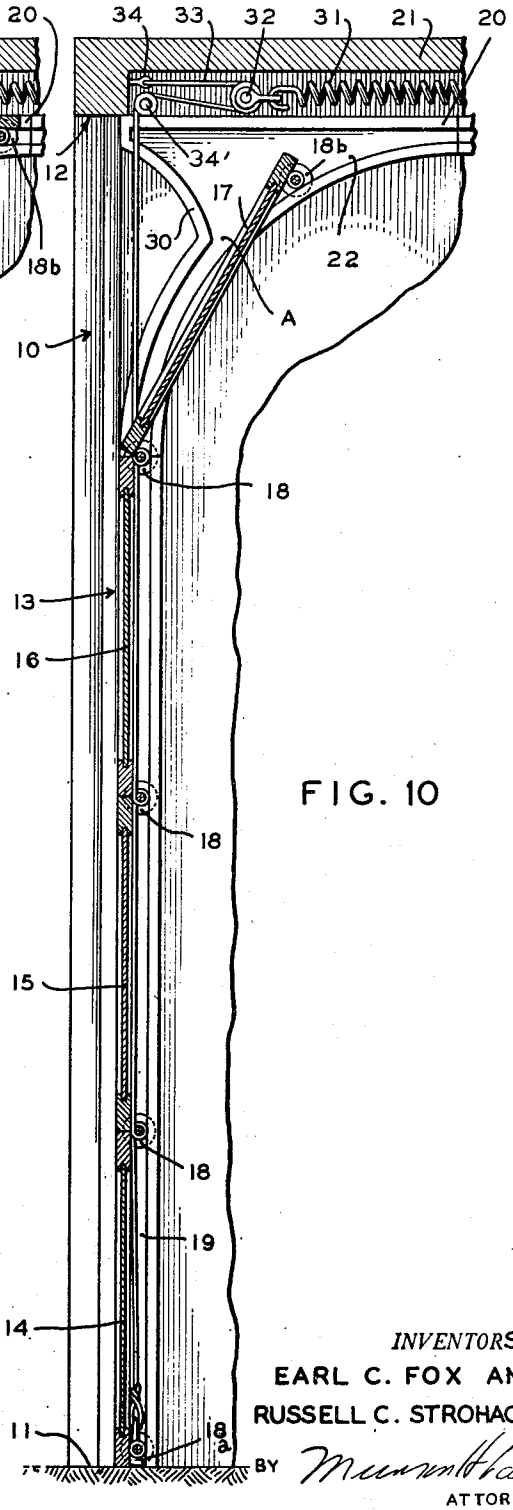

FIG. 10

INVENTORS

EARL C. FOX AND

RUSSELL C. STROHACKER

BY Mason & Hase

ATTORNEY

Patented Nov. 6, 1951

2,573,962

UNITED STATES PATENT OFFICE

2,573,962

SECTIONAL DOOR

Earl C. Fox and Russell C. Strohacker,
Coshocton, Ohio

Application May 25, 1949, Serial No. 95,324

7 Claims. (Cl. 160—214)

1

This invention relates to overhead sectional doors and tracks therefor, of the type which are closed when vertical, may be lifted into a horizontal overhead position, when they are open, and may assume various intermediate positions. Such doors are particularly useful in garages or other buildings using manually controlled doors.

This application is a continuation-in-part of our abandoned application Serial Number 781,292 filed October 22, 1947, for improvements in Sectional Doors.

An important object of the present invention is to provide a trackway for sectional doors which may be installed in garages where the ceiling is at approximately the same level as the top of the door opening, thus conserving space when building or avoiding remodeling costs in already built structures.

Another feature of our invention resides in the provision of a construction facilitating removing the rollers and/or hinges with which the door sections may be equipped.

Another object is to provide means in the form of a reversely curved track to guide the bottom of the door down into the main vertical track when closing the door, or to guide other rollers down into the main vertical track, should these rollers be put in certain positions.

Another advantage of our construction is the prevention of "backlash" due to the action of the counterbalance.

Another object is to provide a door which may be partly opened, either at the top alone like a transom or at the bottom alone to provide ventilation: a feature of much importance in hot climates or hot weather anywhere or where dampness is prevalent in the garage or building.

Other objects and advantages will be pointed out or may be readily inferred from the following description of a preferred embodiment of the invention shown in the accompanying drawings forming a part of this specification.

In said drawings—

Fig. 1 is a front elevation of a sectional door in accordance with our invention, the door being shown closed;

Fig. 2 is a vertical section through the closed door of Fig. 1;

Fig. 3 is a sectional view generally like Fig. 2 but on a smaller scale and with portions broken away, showing the door slightly raised and with its top section inclined inwardly as at the start of the door opening operation;

Fig. 4 is a similar view on a slightly larger scale, showing in dotted lines the bottom door section

2

in one position of the opening movement and showing the same door section in full lines in the fully open position;

Fig. 5 is a view similar to Fig. 4 but showing the door in lowered position with the top section inclined inwardly just prior to final closing movement;

Figs. 6, 7 and 8 are respectively cross sections on lines 6—6, 7—7 and 8—8 of Fig. 2;

Fig. 9 is a detail in perspective of the corner section of the trackway;

Fig. 10 is a view generally like Fig. 1 but showing the door so designed that the top section may be swung inwardly ilke a transom to afford ventilation, the bottom section being however all the way down and the door as a whole being locked, or capable of being locked; and

Fig. 11 is a view of the door of Fig. 10 shown slightly elevated to provide top ventilation, the bottom of the door being down and locked, or capable of being locked.

Referring to the drawings, the door opening is indicated at 10, having a sill portion 11 and a top portion 12. The opening is of rectangular shape and leads to an interior, which may be a garage or other room, or may be the interior of any building.

The door opening 10 is equipped with a sectional door 13 which, when in vertical position, completely closes the door opening, and when in raised position leaves the opening substantially unencumbered except for the thickness of the door which is practically on a level with the top of the door opening.

As shown, the door comprises a plurality of sections 14, 15, 16 and 17 suitably hinged together and provided with pairs of rollers including a lower pair 18^a, 18^a at the bottom of the section 14, and an upper pair 18^b, 18^b at the top of the upper section 17, and intermediate pairs of rollers 18, 18 at the three intermediate points.

The rollers are adapted to coact with vertical and horizontal trackways 19, 19 and 20, 20 respectively, the latter being mounted near the ceiling 21, and with connecting corner sections or roller-guiding members 22, 22 located intermediate the vertical and horizontal trackways and interconnecting such trackways. These corner sections include various features of novelty distinguishing the present device from the prior art as known to us.

It will be understood that the main vertical trackways 19, 19 are mounted at opposite sides of the door frame, and similarly the horizontal trackways 20, 20 are mounted at spaced inter-

vals near the ceiling. The tops of the vertical trackways terminate short of the top of the door opening 10 and the ends of the horizontal trackways 20, 20 terminate short of the opening 10 so as to allow room for the connecting corner sections or roller-guiding members 22, 22.

As shown, a pair of such corner sections are secured in any suitable manner at the upper portions of the door opening intermediate the vertical and horizontal trackways 19 and 20. As shown, each corner section 22 comprises a flat plate 23 substantially in the form of a right angle triangle with a curved hypotenuse. The upper portion of the corner section is provided with a horizontal track portion 25 connecting at one end with the main horizontal trackway 20, and closed at the other end 26 substantially in line with the upper end of the corresponding vertical trackway 19. The corner section also includes a track section 27, curved upwardly from the bottom of the corner section and inwardly from the door opening 10, which connects the top of the vertical trackway 19 with the end of the horizontal trackway 20. Intermediate the ends 28 and 29 of this curved track section is a reversely curved track portion 30 which terminates at the closure 26, said closure 26 providing a stop for the door in either its raised or lowered position. The reversely curved track portion 30 extends in a line generally at right angles to a tangent to the curve of the arcuately curved roller-guiding element 27, but is spaced at its lower end from element 27 to permit a roller to pass therebetween, and then is curved concentrically with but spaced from the arcuately curved element, such space permitting rollers to roll therebetween.

The door may be counterbalanced in whole or in part by a tension spring or springs 31 which may be suitably housed adjacent the ceiling 21 and has one end connected to a fixed frame portion (not shown) and the other end connected to a sheave 32 about which is passed a hoisting rope 33, one end of which is anchored at 34 while the other end passes over a fixed pulley 34' and is secured to the bottom of the lowermost section 14 of the door.

Operation

The door is shown in closed position in Figs. 1 and 2 in which it will be noted that all sections are in the same vertical plane and the rollers 18b at the upper end of the top section 17 are at the junction of the horizontal track portion 25 and the reversely curved track portion 30 of the corner section and are in contact with the stops 26. The track elements adjacent stops 26 obviously form a recess for the rollers. The door is held in this position by the tension spring 31 acting through the holding cord 33. The door is retained in this position without any tendency to buckle or depart from the vertical position.

To open the door the top section 17 may be shoved manually away from the door opening 10 to the inclined position shown in Fig. 3, whereupon the leading sections of the door may be moved to horizontal position under the action of the tension spring 31 (aided if need be by manual power) until the door reaches the position shown in dotted lines in Fig. 4 with the rear section 14 inclined downwardly and the rollers 18a at the entrance to the reversely curved track portion 30. After reaching this position the section 14 will be moved to the full line position with the rollers 18a abutting the stops 26 at the junction of the trackways 25 and 30 under the operation of the tension spring.

To lower the door the section 14 is pulled downwardly along the reverse curve 30 and is then pulled down until the bottom of the lowermost section 14 engages the sill of the door opening. When in this position the top section 17 will at first be in the inclined position shown in Fig. 5, but by pushing out on the top of the door section 17 the rollers 18b may be brought into engagement with the stops 26 at the juncture of the track portions 25 and 30, at which position the door is fully closed and latched in vertical position.

It will be noted that the plate 23 of each corner section is provided with a central unobstructed area A bounded by the track portions 27, 25 and 30. By bringing the rollers of any section into this area the rollers and the corresponding hinges become accessible to an operator within the room area and may be removed for repair, oiling, or the like.

While the horizontal portion of the track is shown as nearly on a level with the top of the door opening, it could be below the level of the top of the door opening. The important thing is to have the center of the horizontal track on a level with the center of the two top rollers. As shown in Fig. 2, the centers of the two top rollers are slightly lower than the top of the door or the top of the door opening. The idea is to permit the sectional door to "break" without rising at all, thus making possible the transom action previously described.

The reverse curve track portion 30 best shown in Fig. 9 is important because it co-operates with the counterbalancing spring or springs and cable when completing the opening of the door, the counterbalance pulling the bottom rollers 18a back from a point "A" Figs. 10 and 11 to the stop (or open end) 26. Then the door is held open (Fig. 4), the counterbalance still co-operating with the reverse curve track portion 30. Also the reversely curved track 30 is needed to start the bottom panel of the door down into the main vertical track (as may be understood by studying the dotted line portion of Fig. 4 in connection with the full lines) also to guide any other rollers if in the position of stops (or open ends) 26. The reverse track 30 also acts to break the door hinges and thus keep the door rollers moving into the horizontal track rather than into the stops or ends 26. Finally, the reverse track 30 prevents any "backlash" due to the counterbalance. Often in operating doors of this type, a door if thrown violently upwardly will bounce back and strike the operator in the head or body, or occasionally may even tear off the door, car or truck top. This so-called "backlash" is obviated by our construction.

While the stops 26 are desirable, they are not necessary since the door may be stopped by striking the door casing, which would occur if the stops were omitted and the ends of the tracks were left open but abutting the door casing.

In the arrangement of Fig. 10, the top door section 17 may be swung open like a transom to ventilate the building, and this may be done without lifting the door; hence the door may be locked to keep out intruders, dogs, etc., yet will afford circulation of air to keep the garage from becoming unbearably hot or damp. With the arrangement of Fig. 11, the door provides a free circulation of air, yet will keep children from playing in the doorway and will discourage attempts at pilfering. In both Figs. 10 and 11 the door is in position to be locked yet may be readily unlocked.

Obviously the invention may be embodied in forms other than the one illustrated.

What we claim is:

1. A device of the character described comprising a sectional closure element, rollers fixed to said closure element at the bottom and top and at the joints between the sections of the closure element, a pair of vertical trackways, track corner sections interposed between the tops of the vertical trackways and the adjacent ends of the horizontal trackways, counterbalancing means secured to the closure element, each of the track corner sections comprising a horizontal upper roller-guiding element, an arcuately curved roller-guiding element joining the vertical and horizontal trackways and being spaced from the horizontal upper roller-guiding element at one end of the corner section, and a reversely curved roller-guiding element extending from the opposite end of the corner section downwardly toward the arcuately curved roller-guiding element and at a point about midway between the ends of the arcuately curved roller-guiding element assuming a curvature which is concentric with the arcuately curved roller-guiding element and extending down to the extreme lower end of the track corner section.

2. The invention defined in claim 1, wherein the first mentioned end of the track corner section, also said opposite end of the track corner section, are both on the same level as the horizontal trackways, and said opposite end is directly above the center line or axis of the vertical trackway which joins onto the track corner section, there being an unobstructed central area of substantial size on the track corner section between the horizontal upper roller-guiding element, the arcuately curved roller-guiding element, and the reversely curved roller-guiding element, said unobstructed central area making the rollers of the closure element accessible for oiling or repair by moving the closure element so as to bring the rollers into said unobstructed central area.

3. As a sub-combination, a roller-guiding member adapted to cooperate with vertical and horizontal roller trackways; said member including an upper straight horizontal roller-guiding element terminating at two opposite ends of the member; an arcuately curved roller guiding element for joining the vertical and horizontal trackways; and a reversely curved roller-guiding element extending downwardly from one end of said member in a line generally at right angles to a tangent to the curve of said arcuately curved element, and then curving downwardly until it approaches the arcuately curved element, and then being curved concentrically with but spaced from the arcuately curved element a sufficient distance to permit rollers to roll therebetween.

4. For use with a sectional door comprising a plurality of hinged door sections, each section having laterally extending rollers, said door being movable from a vertical position in which the door completely closes a door opening to a raised or horizontal position in which the door opening is unobstructed; a pair of main vertical roller trackways adapted to be mounted on opposite sides of a door opening and terminating short of the top of the opening, a pair of main spaced horizontal roller trackways located substantially at the level of the top of the door opening but terminating short of the opening, and a pair of corner sections connecting the vertical and horizontal sections, each corner section including a curved track section connecting a main horizontal track section with a main vertical track section, a horizontal track portion aligned with the corresponding main horizontal track portion and terminating in a stop in vertical alignment with the corresponding vertical track section but spaced therefrom, and a reversely curved track portion extending upwardly from a point intermediate the ends of the curved track section to said stop; said corner sections each having a central unobstructed area bounded by the curved track section, the horizontal track portion and the reversely curved track portion.

5. The combination with a sectional door comprising a plurality of hinged door sections, each section having laterally extending rollers, said door being movable from a vertical position in which the door completely closes a door opening to a raised or horizontal position in which the door opening is unobstructed; of a pair of main vertical roller trackways adapted to be mounted on opposite sides of a door opening and terminating short of the top of the opening, a pair of main spaced horizontal roller trackways located substantially at the level of the top of the door opening but terminating short of the opening, and a pair of corner sections connecting the vertical and horizontal sections, each corner section including a curved track section connecting a main horizontal track section with a main vertical track section, a horizontal track portion aligned with the corresponding main horizontal track portion and terminating in a stop in vertical alignment with the corresponding vertical rack section but spaced therefrom, and a reversely curved track portion extending from a point intermediate the ends of the curved track section upwardly to said stop, and spring means located directly above the main horizontal track portion and connected to the door for substantially counterbalancing the door.

6. In combination, a sectional hinged closure, and means permitting the closure to move from a vertical locked position to a horizontal locked position on a level approximately with the upper end of the closure when it is vertical and locked; said means including rollers arranged in pairs on opposite sides at the extreme lower end of the closure, at the extreme upper end of the closure, and at every joint of the sectional closure; said means further including a pair of vertical trackways, a pair of horizontal trackways, and a pair of track corner sections each joining a vertical trackway with a horizontal trackway; each track corner section including a horizontal roller-guiding element extending along its top from front to rear, an arcuately curved roller-guiding element extending from the lower end of the corner section to its rear end, a reversely curved roller-guiding element having its upper end near to but spaced from the horizontal roller-guiding element to provide a roller-receiving recess at the front end of the track corner section, the lower end of the reversely curved roller-guiding element extending down to a point near to but spaced from the arcuately curved roller-guiding element so that a roller may pass between said lower end and said arcuately curved roller-guiding element, said reversely curved roller-guiding elements acting to guide rollers from the upper ends of the vertical trackways into said recesses and from said recesses back into the vertical trackways or onto the arcuately curved roller-guiding element.

7. The invention as defined in claim 6, where-

in there are tension springs and connecting elements attached to the lower end of the sectional hinged closure, the upper rollers of the hinged closure being received in said recesses when the hinged closure is vertical and closed and the tension imparted by said springs plus the shape of the reversely curved roller-guiding elements holding the rollers in said recesses and then securing the hinged closure against movement, each of the other pairs of rollers being receivable in said recesses and securing the hinged closure against movement when so received.

EARL C. FOX.
RUSSELL C. STROHACKER.

REFERENCES CITED

The following references are of record in the file of this patent:

UNITED STATES PATENTS

Number	Name	Date
2,064,470	Heckman	Dec. 15, 1936
2,338,205	Rowe	Jan. 4, 1944