Nov. 16, 1948. J. J. ROTHWELL 2,453,861

ADJUSTING MEANS FOR CONTROL DEVICES

Filed Aug. 27, 1946 2 Sheets-Sheet 1

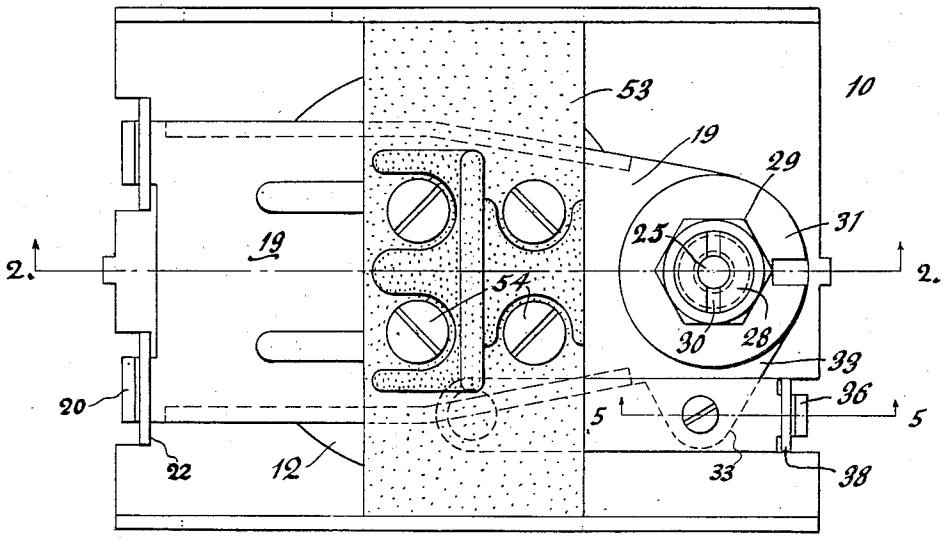

Fig. 1

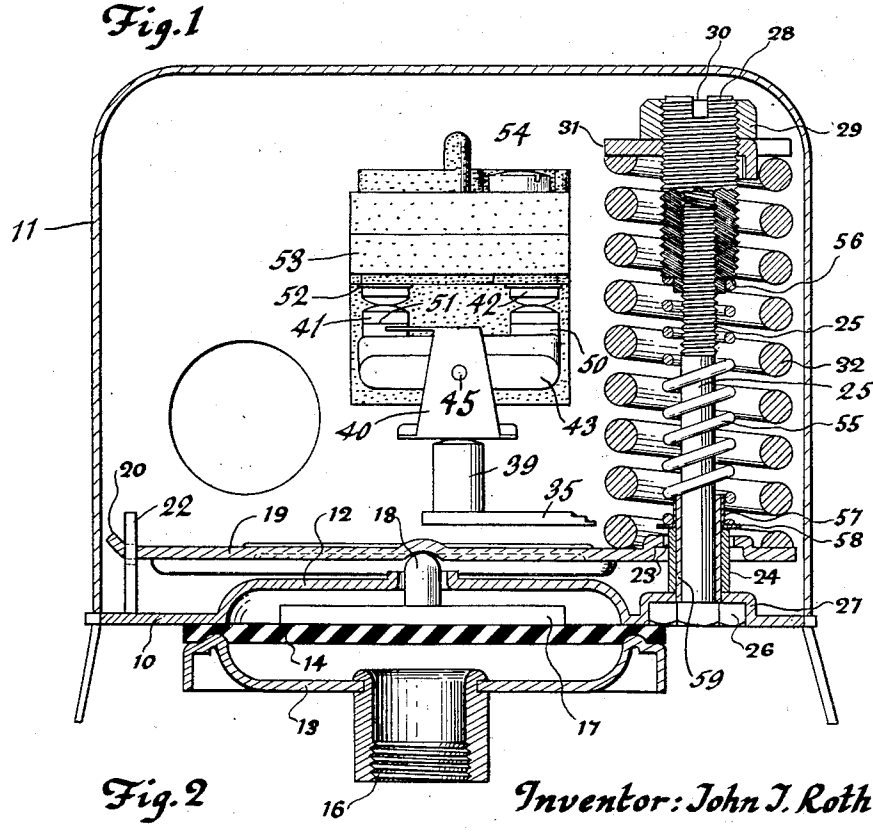

Fig. 2

Inventor: John J. Rothwell

By: Bair & Freeman

Attorneys

Nov. 16, 1948. J. J. ROTHWELL 2,453,861

ADJUSTING MEANS FOR CONTROL DEVICES

Filed Aug. 27, 1946 2 Sheets-Sheet 2

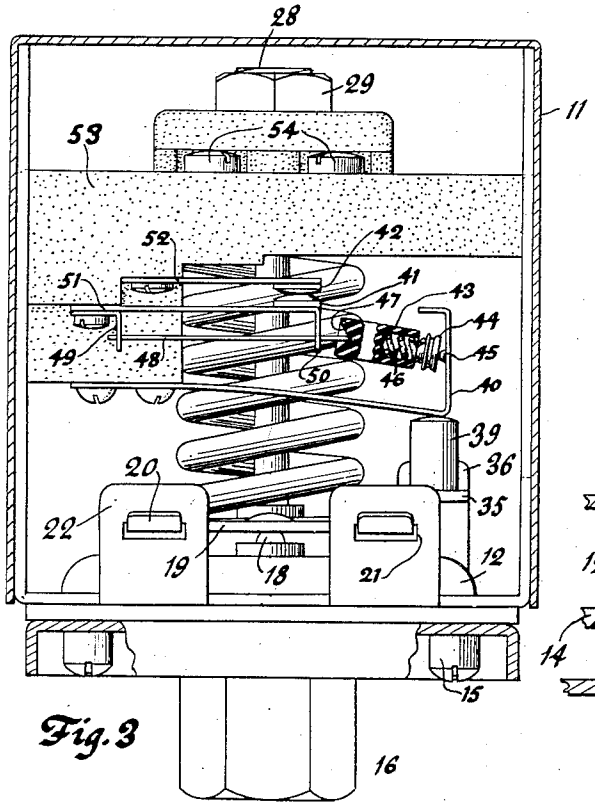

Fig. 3

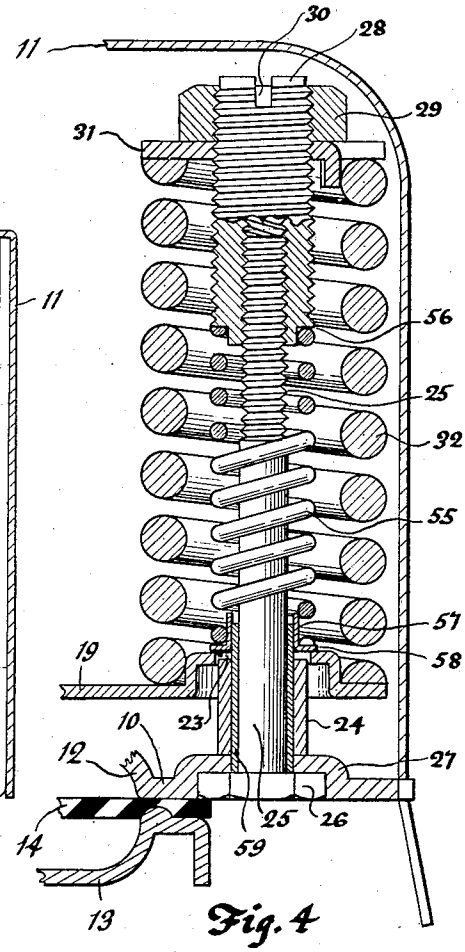

Fig. 4

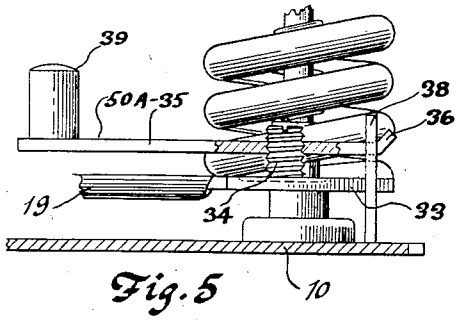

Fig. 5

Inventor: John J. Rothwell
By:
Bair & Freeman
Attorneys

Patented Nov. 16, 1948

2,453,861

UNITED STATES PATENT OFFICE

2,453,861

ADJUSTING MEANS FOR CONTROL DEVICES

John J. Rothwell, Elkhart, Ind., assignor to Penn Electric Switch Co., Goshen, Ind., a corporation of Iowa

Application August 27, 1946, Serial No. 693,299

7 Claims. (Cl. 74—469)

1

My present invention relates to adjusting means for control devices such as automatic electric switches wherein it is desirable to adjust the range and differential of operation of the switch.

One object of the invention is to provide a differential adjusting mechanism of simple and inexpensive construction including a spring which is located inside the range spring.

Another object is to provide an adjustment means for the differential, which upon being adjusted does not change the range setting.

Still another object is to provide an adjusting device for the range spring, which during adjustment does not change the adjustment of the differential adjusting device.

A further object is to provide an adjusting arrangement including a nut for adjusting the range spring, the nut being threaded on a sleeve which in turn is threaded on a stationary bolt in such manner that turning of the sleeve causes it to move longitudinally through the nut and over the bolt for changing the setting of the differential spring.

With these and other objects in view, my invention consists in the construction, arrangement and combination of the various parts of my control adjustment mechanism whereby the objects contemplated are attained, as hereinafter more fully set forth, pointed out in my claims and illustrated in the accompanying drawings, wherein:

Figure 1 is a plan view of a control switch with the cover removed, my adjusting means being applied thereto.

Figure 2 is a sectional view partially on the line 2—2 of Figure 1 showing the control switch in closed position.

Figure 3 is an end elevation of Figure 2 looking at the left side of Figure 2 and with the cover shown in section.

Figure 4 is a sectional view similar to Figure 2 but slightly enlarged relative thereto and showing the control device in a different position with the differential widening means in operation, and

Figure 5 is a sectional view on the line 5—5 of Figure 1 showing a switch operating arm.

On the accompanying drawings I have used the reference numeral 10 to indicate a base plate and 11 a cover therefor. The base plate 10 has an upwardly embossed portion 12 that cooperates with a stamping 13 to form a chamber for a diaphragm 14. The edge of the diaphragm is secured between the base plate 10 and the stamping 13 as by screws 15 (see Fig. 3).

A pressure connection 16 is provided to the diaphragm chamber beneath the diaphragm 14

2

and above the diaphragm a follower plate 17 is mounted. The plate 17 has a projecting pin 18 adapted to coact with a control arm 19.

The control arm 19 has a pair of fingers 20 extended through openings 21 of a pair of flanges 22 struck up from the base plate 10. The pin 18 engages the control 19 intermediate its end and at the end opposite the fingers 20 an opening 23 is provided.

A stop in the form of a sleeve 24 is located in the opening 23 and within the sleeve a bolt 25 is received, the head of the bolt indicated at 26 coacting with an other-than-round embossing 27 of the base plate 10 to prevent rotation of the bolt relative to the base plate.

The upper end of the bolt 25 is threaded and a sleeve 28 is mounted thereon having an internal thread to coact with the threads of the bolt. The sleeve 28 also has external threads and these are preferably of the same pitch as the internal threads. A nut 29 is threaded on the outside of the sleeve 28 and the sleeve 28 is provided with a slot 30 for rotating it by means of a screw driver. The nut 29 bears against a washer 31 between which and the control arm 19 a range spring 32 is interposed.

The control arm 19 has a lateral extension 33 against which a set screw 34 bears (see Fig. 5). The set screw 34 is carried by a switch operating arm 35 pivoted by means of a finger 36 in a perforated ear 38 of the base plate 10 in the manner already described for the control arm 19. The switch arm 35 carries a post 39 adapted to contact with a switch spring 40 (see Fig. 3) which is normally in the lowered position illustrated. When the post 39 rises it carries the spring with it and effects separation of a movable contact 41 from a stationary contact 42 through the medium of a toggle thimble 43.

A pivot button 44 is interposed between the thimble 43 of insulating material and a projection 45 of the switch arm 40 and a toggle spring 46 is received in the thimble 43 against the pivot button 44. The thimble 43 has a V-seat 47 to contact the end of a switch operating blade 48 pivoted to a bracket 49. The blade 48 passes through an opening of a right angle extension 50 of a switch blade 51, which blade carries the movable contact 41. The stationary contact 42 is carried by a switch blade 52.

The blades 51 and 52 as well as the switch operating spring 40 are mounted on a base member 53 of insulating material. The base 53 is provided with suitable terminals 54 for making circuit connections to the control switch.

Within the range spring **32** I provide a differential spring **55** interposed between a shoulder **56** of the sleeve **28** and a flange **58** of a sleeve **57**. The flange **58**, when the parts are in the position of Fig. 2, is adapted to contact the upper end of the sleeve **24** and is guided by a sleeve **59** within the sleeve **24**.

Practical operation

As pressure under the diaphragm **14** increases, the right-hand end of the control arm **19** will rise. Somewhere between the lower limit of Fig. 2 and an upper limit beyond that shown in Fig. 4, the control arm **19** will pick up the flange **58** and lift the sleeve **57** away from the stop sleeve **24**, thus adding the force of the differential spring **55** to that of the range spring **32**. This will increase the differential of operation of the control device, depending upon the adjustment of the spring **55**.

If the spring is omitted or its adjustment is zero, then of course the minimum differential is at the minimum inherent in the switch structure. The spring **55**, as long as it is brought into operation before the upper limit of movement of the arm **19** is reached (where the toggle thimble **43** passes over center and opens the contact **41** and **42**), will effect a widening of the inherent differential.

When it is desirable to change the differential of operation, a screw driver is associated with the slot **30** of the sleeve **28** for rotating the sleeve, causing it to travel downwardly relative to the bolt **25** and likewise downwardly at the same rate relative to the nut **29**, providing the internal and external screws of the sleeve have the same pitch. Thus we have adjustment of a differential spring located within a range spring without however changing the adjustment of the range spring itself during differential adjustments.

When it is desirable to change the adjustment of the range spring, the nut **29** is rotated, thus causing the nut to travel relative to the sleeve **28**, which is in effect similar travel relative to the stationary bolt **25**, thus effecting a change in compression of the range spring without in any way changing the adjustment of the differential spring.

An arrangement of this character permits the differential spring to be located within a range spring instead of having to take up other space within the control housing. Range springs in control devices of the character disclosed are ordinarily relatively large and heavy and have plenty of room within them to receive a differential spring in the manner disclosed. The arrangement of the bolt, sleeve and nut **25—28—29** is such that either adjustment can be effected without the adjustments interfering with each other.

Some changes may be made in the construction and arrangement of the parts of my adjusting means without departing from the real spirit and purpose of my invention, and it is my intention to cover by my claims any modified forms of structure or use of mechanical equivalents which may be reasonably included within their scope.

I claim as my invention:

1. In adjusting means for a control device having a control arm, a range spring, a stationary threaded element, a sleeve threaded thereon, a range adjusting nut for the range spring threaded on said sleeve, a differential spring within the range spring and engaging said sleeve for adjustment thereby when the sleeve is adjusted relative to said threaded element and said range adjusting nut, an element engaged by said differential spring, a stop engaged by said element, said control arm during movement from one limit to another being effective to engage said element and move it away from said stop in opposition to said differential spring.

2. Adjusting means for a control device having a control arm, comprising a range spring for said control arm, an adjusting nut for said range spring, said range spring being interposed between said control arm and said nut, a differential spring wholly inside said range spring and cooperable with said control arm during its movement for widening the differential of operation of said control arm, and adjusting means for said differential spring threaded in said nut and extending into said range spring.

3. In adjusting means for a control device having a control arm, a range spring, a stationary threaded bolt, a sleeve threaded thereon, a range adjusting nut for the range spring and threaded on said sleeve, a differential spring within said range spring and engaging said sleeve for adjustment thereby, a stop sleeve on said bolt for said differential spring, said control arm during movement from one limit to another being effective to engage said differential spring and move it from said stop sleeve, the force of said differential spring being thereupon imposed on said control arm.

4. In combination with a control arm operable between opposite limits of movement, range and differential adjustment mechanism therefor comprising a range spring, and a differential spring within said range spring, a stationary element, a nut for adjusting said range spring, a sleeve for adjusting said differential spring, said sleeve being threaded in said nut and threaded on said stationary element whereby rotation of said nut relative to stationary element and said sleeve changes the adjustment of the range spring and rotation of the sleeve relative to said stationary element and said nut changes adjustment of the differential spring, said differential spring being picked up by said control arm at a point intermediate the limits of movement of the arm.

5. In a control structure, a control arm, pressure-operated means to move said arm between opposite limits, a control device moved to one position by said control arm at one of its limits and to another position at another limit of movement of the control arm, a stationary bolt passing through said control arm, a sleeve threaded thereon, a nut threaded on said sleeve, said nut and bolt having the same pitch whereby rotation of the sleeve relative thereto and relative to the bolt leaves the nut at the same distance from the control arm, a movable element on said bolt, a stationary stop therefor, a range spring interposed between said nut and said control arm, and a differential spring interposed between said sleeve and said movable element, said control arm being engageable with said element for moving it from said stop during a portion of the movement of the control arm from one of its limits to the other.

6. In a control structure, a control arm, pressure-operated means to move said arm between opposite limits, a control device moved to one position by said control arm at one of its limits and to another position at another limit of movement of the control arm, a stationary bolt passing through said control arm, a sleeve threaded thereon, a nut threaded on said sleeve, a movable element on said bolt, a stationary stop therefor, a range spring interposed between said nut and said

control arm, and a differential spring interposed between said sleeve and said movable element.

7. In a control structure, a control arm, range and differential springs therefor, pressure-operated means to move said arm between opposite limits, a stationary bolt, a sleeve threaded thereon for adjusting said differential spring, a nut threaded on said sleeve for adjusting said range spring, the internal and external threads of said sleeve being of the same pitch to prevent movement of said nut toward or away from said control arm when adjusting said sleeve, a movable element on said bolt, and a stationary stop therefor, said control arm being engageable with said

element for moving it from said stop during a portion of the movement of the control arm from one of its limits to the other.

JOHN J. ROTHWELL.

REFERENCES CITED

The following references are of record in the file of this patent:

UNITED STATES PATENTS

Number	Name	Date
2,145,665	Rodgers	Jan. 31, 1939
2,179,599	Raney	Nov. 14, 1939