US 20090236337A1

(19) United States

(12) Patent Application Publication

(10) Pub. No.: US 2009/0236337 A1

(43) Pub. Date: Sep. 24, 2009

Orgeldinger

(54) TRANSPORT CONTAINER SYSTEM FOR GOODS, ESPECIALLY FOR FRUIT AND VEGETABLES

(75) Inventor: **Wolfgang Orgeldinger**, Muenchen (DE)

Correspondence Address:
JORDAN AND HAMBURG LLP
122 EAST 42ND STREET, SUITE 4000
NEW YORK, NY 10168 (US)

(73) Assignee: **IFCO System GmbH**, Pullach (DE)

(21) Appl. No.: **12/455,213**

(22) Filed: **May 28, 2009**

Related U.S. Application Data

(62) Division of application No. 10/560,487, filed on Dec. 12, 2005, filed as application No. PCT/EP04/05578 on May 24, 2004.

(30) **Foreign Application Priority Data**

Jun. 12, 2003 (DE) 103 26 574.0

Publication Classification

(51) **Int. Cl.**
B65D 6/28 (2006.01)

(52) **U.S. Cl.** **220/4.03**

(57) **ABSTRACT**

The invention relates to a transport container system which is especially suitable for transporting goods such as fruit and vegetables. Said system comprises an optionally collapsable crate, and has a bottom part and four lateral wall parts that are structured in a pressure-resistant manner, and a top part for enlarging the volume of the transport container. Said top part is formed in such a way that it is complementary to the crate opening formed by the lateral wall parts of the crate, and can be placed on the upper side of said lateral wall parts. Said crate and said top part of the transport container system can be detachably engaged in such a way that the transport container system can be stacked.

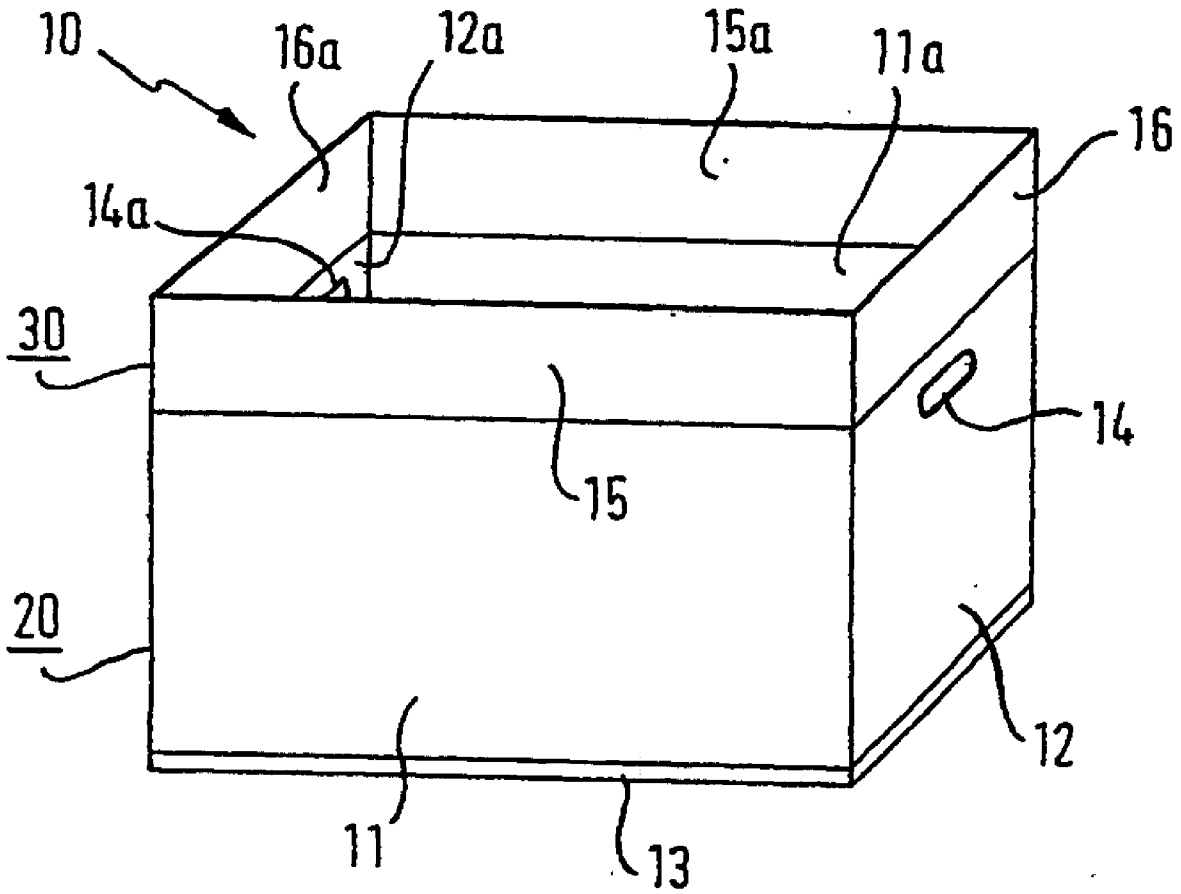

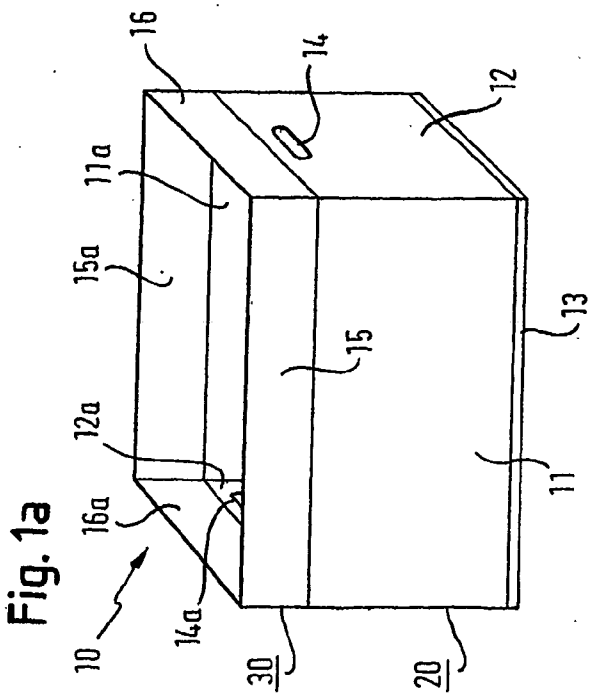

Fig. 1a

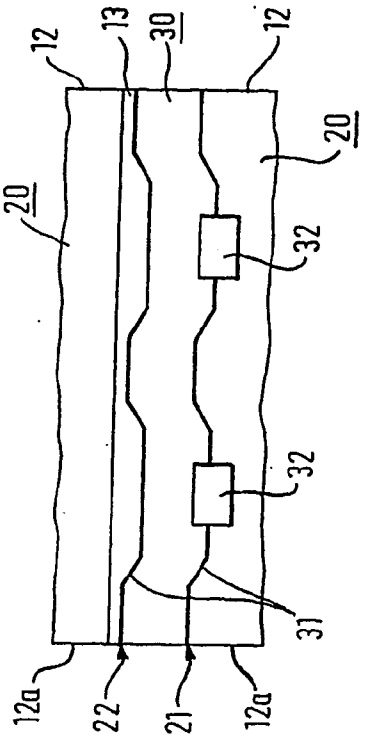

Fig. 2

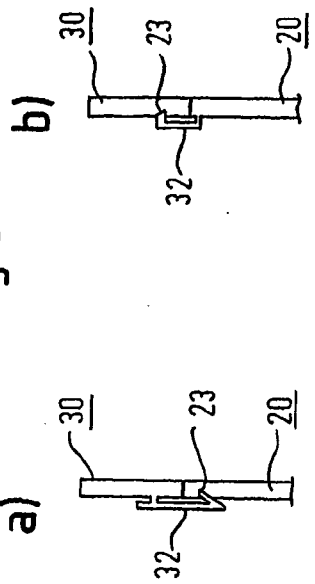

Fig. 3

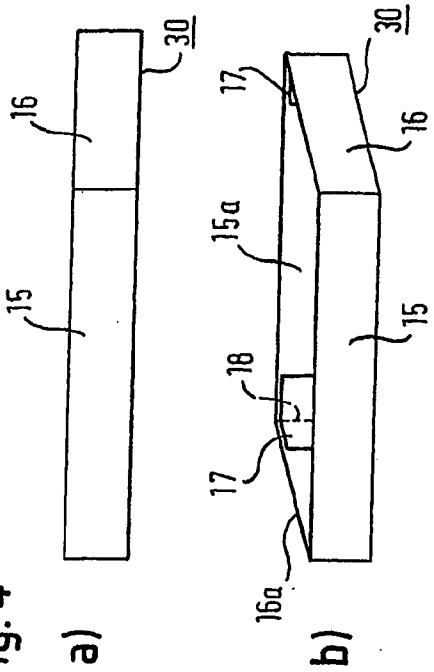

Fig. 4

Fig. 1b

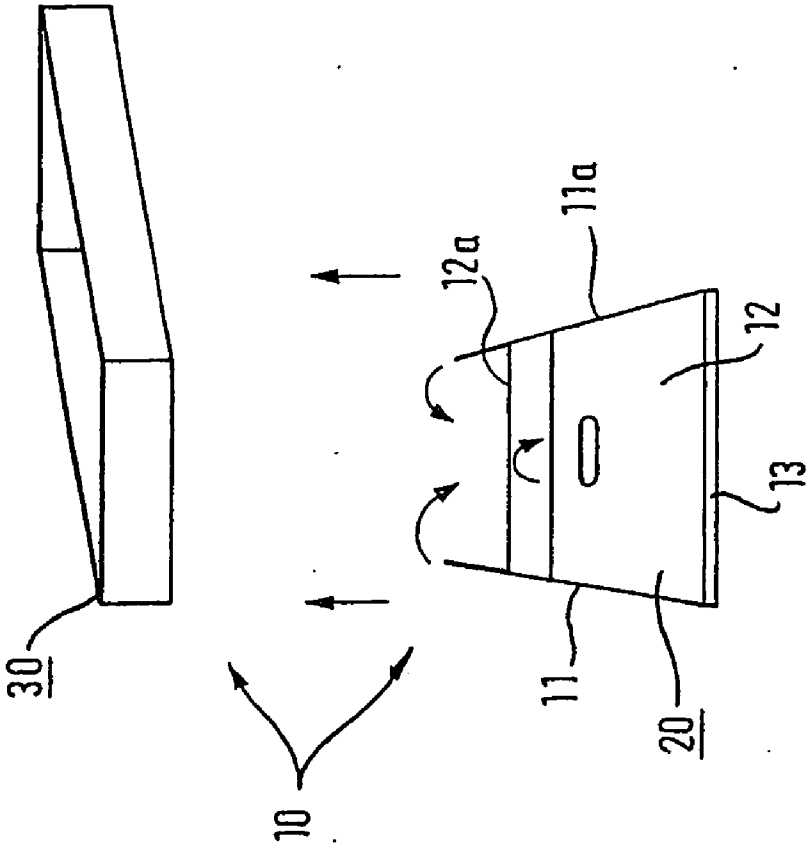

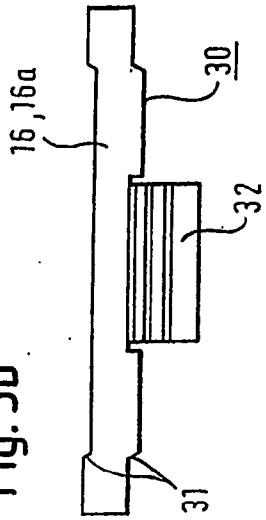

Fig. 5b

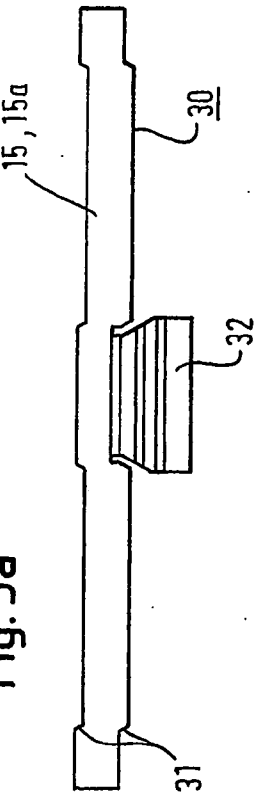

Fig. 5a

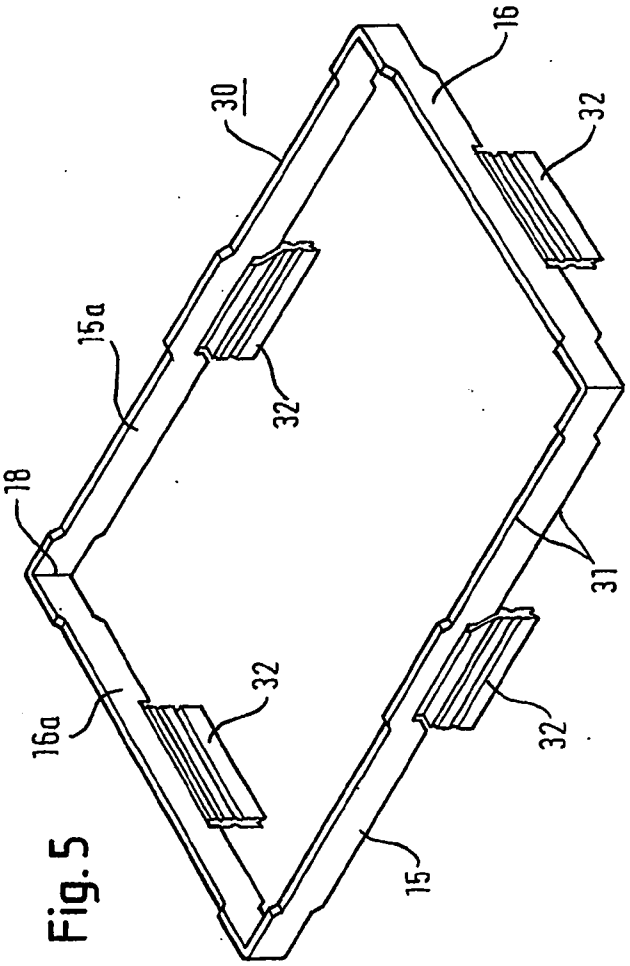

Fig. 5

TRANSPORT CONTAINER SYSTEM FOR GOODS, ESPECIALLY FOR FRUIT AND VEGETABLES

[0001] The present application is a Divisional Application under 35 U.S.C. § 121 of U.S. patent application Ser. No. 10/560,487, filed 22 Feb. 2006.

BACKGROUND OF THE INVENTION

[0002] The present invention relates to a transport container system, in particular for goods, that has a stackable transport container, preferably a crate. The stackable transport container can be foldable or non-foldable. Such crates are known and are used in particular for transporting goods such as fruits and vegetables. In the framework of this invention, goods are understood to be units of goods to be transported comprising individual items with a size of at least 0.5-1.0 cm.

[0003] The foldable and non-foldable transport containers that are already known for fruits and vegetables comprise cardboard, wood, or plastic. The foldable transport containers are characterized in that their lateral wall parts can be moved against the interior bottom of the transport container, this achieving a decrease in the volume of the transport container when it is empty. When unfolded, the lateral wall parts are at a 90° angle to the interior bottom and are detachably engageable with one another using various means. While the bottom of the non-foldable or of the foldable transport container has a defined size, there are containers with lateral wall parts of different heights for attaining different transport volumes, whereby two or four lateral wall parts have the same height. Furthermore, the lateral wall parts have on the upper side facing away from the bottom a profile or an apparatus that renders the transport container stackable. The transport containers preferably have corner stiffeners for increasing the stability of the non-foldable and foldable transport containers, in particular with respect to stackability. The previously known transport containers have a maximum volume capacity that is determined by the size of the bottom and the height of the lateral wall parts. When larger volume capacities are required for the transport containers, the transport containers must be provided with other, higher lateral wall parts. Thus, rapid adaptation of the volume capacity of the transport containers to changing user requirements is only conditionally provided.

[0004] The size of certain types of fruits and vegetables varies from season to season, depending on different factors for instance during the growth period. The size of the fruits and vegetables to be packed is established by regulations of the European Community. One known problem during transport of goods such as fruits and vegetables thus results from the varying size of the goods to be transported for optimum filling of transport containers. In order to be able to take into account varying requirements for goods, the transport containers, in particular crates, are machine-manufactured in specific sizes that can also be specified by the production facility or can be established by the selection of the production parameters. It is therefore not possible to rapidly change the size of the transport container and thus its volume capacity in the sense of optimum filling depending on the size of the goods without major logistical transport problems occurring or a complex change in the production facility and associated high costs.

[0005] The problem cited in the foregoing particularly occurs with the known transport containers when cardboard packages that are comparatively simple to produce and that are for the transport of goods such as fruits and vegetables are replaced by more environmentally-friendly reusable containers that are made of plastic or a similar material suitable for this use but that are also expensive to produce. For the known reusable containers made of plastic, optimum adaptation of the transport containers to the size of the goods to be transported proves to be particularly complex and difficult. In order to attain maximum use of transport apparatus, the transport containers are stackable so that a plurality of these containers can be transported in containers, on loading beds of trucks, in freight trains, or on similar transport apparatus. The item to be transported must not project out over the upper edge of the transport container, since then the transport container would no longer be stackable and/or the item would be damaged. What this results in is that the volume capacity of the known transport containers in many cases cannot be used optimally.

[0006] Applicant's reusable transport containers, which are called "round trip containers" in the industry, are available in approximately ten different embodiments that are distinguished by the height of the lateral wall parts. The height of the lateral wall parts varies from 8 to 28 cm, whereby preferably used are heights of 8, 10, 13, 15, 16, 18, 20, and 23 cm. The bottom of these transport containers is preferably rectangular and has an exterior dimension of 600 mm×400 mm. This means it corresponds to the bottom dimensions of standardized EURO and US palettes.

[0007] The object of the present invention is to design a transport container system such that it is possible to rapidly and variably adapt the volume capacity of transport containers to the varying sizes of the goods to be transported and thus optimum filling of the transport containers is possible.

SUMMARY OF THE INVENTION

[0008] One inventive transport container system is distinguished by a stackable transport container, in particular a crate, that comprises a bottom and four lateral wall parts that are structured to be stable under pressure. The stackable transport container is foldable or non-foldable. Furthermore, the transport container system includes a top or extender that makes it possible to enlarge the volume capacity of the transport container. The top itself comprises four lateral wall parts that are placed in a shape-conforming manner over the crate opening and is produced from cardboard, plastic, wood or a similar suitably stable material. These materials can advantageously be provided with an impression, labeling, or another marking that preferably facilitates recognition, registration, or particularly preferred advertising purposes. One special advantage results from the production of the tops from natural products such as for instance wood or cardboard that make it possible to dispose of the tops at the delivery site for the goods, so that there are no costs for returning the tops to the selling location.

[0009] Another advantage of the invention results from the fact that the lateral wall parts of the tops can be produced with different heights, so that the volume capacity of the transport container is optimally adapted to the variable size of the goods to be transported, in particular fruits and vegetables. The height of the lateral wall parts of the top is preferably 2-8 cm, particularly preferred 3-5 cm. At least two approximately

parallel lateral wall parts preferably have the same height; particularly preferred all four lateral wall parts are equal in height.

[0010] The lateral wall parts of the top that conform in shape to the transport container can preferably detachably engage with the transport container using fastening means. The fastening means are preferably attached to and can detachably engage with the top and transport container. It is particularly preferred that the top or the transport container has a fastening means that detachably engages with the transport container or the top. The top preferably locks to an area of the lateral wall part or bottom of the transport container. Suitable for fastening means are in particular all means that provide a detachably engageable connection between transport container and top such as eyes, hooks, screw connections, etc. The transport container and the top are preferably detachably engageable using external fastening means that are not permanently attached to the transport container system, such as clamps, clips, etc. These fastening means advantageously prevent the top from being displaced relative to the transport container so that the goods contained in the transport container systems are not damaged. Another advantage of detachable engagement of the top with the transport container is that the top can be removed from the transport container with no problem at the destination site for the goods to be transported and thus there is a decrease in volume for the emptied transport container. This is particularly advantageous when using reusable transport containers.

[0011] The wall strength of the lateral wall parts of the top is preferably selected such that the transport container systems filled with the goods to be transported are stackable. The stackability of the transport container systems is preferably promoted by four lateral wall parts of the top that have the same height and that in particular it can detachably engage with the transport container and particularly preferred by a profile on the upper side of the top that preferably conforms with a profile or auxiliary profile on the underside of the bottom of the transport container. The profiles of top and transport container advantageously facilitate stacking the transport container systems and prevent the systems from shifting during transport. Therefore additional securing of the preferably stacked transport container systems is not necessary during transport. This contributes advantageously to maximum utilization of the volume of transport apparatus without damaging the goods to be transported.

[0012] The top can preferably be collapsed to a narrow strip, in particular using folding sites at the four corner edges. One advantage is the low transport volume of tops that have been folded up, which facilitates optimum use of transport means since the tops frequently have to be transported across great distances to the packaging areas for the goods, in particular harvesting regions for fruits and vegetables, and in the case of reusable tops back to the selling locations.

[0013] The frame-shaped top preferably has corner stiffeners for increasing stability. An increase in stability is furthermore attained in particular in that the top comprises one piece and is created by connecting the free ends of a band-shaped lateral wall part or particularly preferred is embodied as an extrusion profile. Alternatively, the frame-shaped top is formed by connecting the free ends of individually produced lateral wall parts.

[0014] Additional application options and advantages of the present invention result from the following description with respect to the drawings.

BRIEF DESCRIPTION OF THE DRAWINGS

[0015] FIG. **1***a*: is a perspective elevation of one embodiment of the inventive transport container system;

[0016] FIG. **1***b*: is a schematic representation of the foldable transport container and the foldable top;

[0017] FIG. **2**: is a perspective of a profile-conforming top;

[0018] FIG. **3***a*: is an exemplary embodiment of a fastening means attached to the top;

[0019] FIG. **3***b*: is an exemplary embodiment of a fastening means attached to the transport container;

[0020] FIG. **4***a*: illustrates the top when folded;

[0021] FIG. **4***b* illustrates the top in frame shape with corner stiffeners;

[0022] FIG. **5**: is a perspective elevation of a profile-conforming top;

[0023] FIG. **5***a*: is a view of a longitudinal side of a profile-conforming top with fastening means;

[0024] FIG. **5***b*: is a view of a transverse side of a profile-conforming top with fastening means.

DETAILED DESCRIPTION OF THE INVENTION

[0025] FIG. **1***a* is a perspective representation of an embodiment of an inventive transport container system **10**. The transport container system **10** illustrated in FIG. **1***a* comprises a non-foldable or foldable transport container **20** and a top **30**. The transport container **20** of the inventive transport container system **10** has a rectangular bottom **13** and two largely parallel lateral wall parts **11** and **11***a* as well as two largely parallel lateral walls **12** and **12***a*. The lateral wall parts **11**, **11***a*, **12**, **12***a* are foldable relative to the interior surface of the bottom **13** of the transport container **20**, as illustrated in FIG. **1***b*.

[0026] FIG. **1***a* illustrates a non-foldable or the unfolded condition of a foldable transport container **20**, whereby the lateral wall parts **11**, **11***a*, **12**, **12***a* are at a 90° angle to the interior surface of the bottom **13** of the transport container **20**. In the upper area the two lateral wall parts **12** and **12***a* have handle recesses **14**, **14***a* that facilitate ease of transport for the transport container system. Such handle recesses **14**, **14***a* are also conceivable in the two lateral wall parts **11** and **11***a*; however these are not shown for reasons of greater clarity. Furthermore, FIG. **1***a* illustrates the frame-shaped top **30**, which is placed on the lateral walls **11**, **11***a*, **12**, **12***a* in a shape-conforming manner. The top **30**, which conforms to the transport container **20**, likewise comprises two largely parallel lateral wall parts **15** and **15***a* and two largely parallel lateral wall parts **16** and **16***a*. As shown in FIG. **1***a*, the lateral wall parts **11**, **11***a*, **12**, **12***a* of the transport container **20** are preferably equal in height, as are the lateral wall parts **15**, **15***a*, **16**, **16***a* of the top **30**, whereby the height of the lateral wall parts of the top **30** and of the transport container **20** are preferably different.

[0027] The lateral wall parts **11**, **11***a*, **12**, **12***a* of the transport container terminate in a straight line in the wall area opposing the bottom **13**, as illustrated in FIG. **1***a*, or have a profile **21**, as illustrated in FIGS. **2**, **5**, **5***a*, and **5***b*. The same applies for the bottom **13** of the transport container **20**. In FIG. **1***a* the bottom **13** is embodied in a straight line, while FIGS. **2**, **5**, **5***a*, and **5***b* show a profile **22** on the underside of the

bottom **13** of the transport container **20**. As can be seen in FIGS. **1***a*, **2**, **5**, **5***a*, and **5***b*, the profile **31** of the top **30** conforms to the lateral wall parts **11**, **11***a*, **12**, **12***a*, and the bottom **13** of the transport container **20**. Preferably the top **30** includes fastening means **32** that are produced from the material of the top **30** and that detachably engage with the preferably lattice-structured lateral wall parts **11**, **11***a*, **12**, **12***a* of the transport container **20** (FIGS. **2**, **3***a*, **5**, **5***a*, and **5***b*). A lattice structure of the external wall surfaces, which increases stability of the walls under pressure, is not illustrated in order that the drawings be clear and simple. The fastening means **32** can be produced from any other material than the top or the transport container. Preferably the transport container **20** or the top **30** has a counterpiece **23** to the fastening means **32** with which the fastening means **32** detachably engage. Particularly preferred, the fastening means **32** are attached to the top **30** and detachably engage with the lateral wall parts **11**, **11***a*, **12**, **12***a* or the bottom **13** of the transport container **20**. In another embodiment (FIG. **3***b*), the fastening means are joined to the transport container **20** and detachably engage with the lateral wall parts **15**, **15***a*, **16**, **16***a* of the top **30**.

[0028] FIG. **3***a* illustrates fastening means **32** that are attached to the top **30** and that detachably engage with the lateral wall surface of the transport container **20**. In this exemplary embodiment, a hook-shaped fastening means is illustrated that detachably engages in the lattice structure of the wall surface of the transport container **20**. The profile-conforming design of the top **30** as illustrated in FIG. **2**, as well as the manner in which the top **30** detachably engages with the transport container **20** using fastening means **32**, facilitates the advantageous stackability of the transport container systems **10**.

[0029] FIG. **4***a* illustrates the inventive top **30** when folded. The top **30** can assume two different physical shapes, either collapsed to save room for transport to the site at which the top **30** will be used (FIG. **4***a*) or unfolded in the frame-shaped embodiment (FIG. **4***b*) in which the top **30** is a component of the transport container system.

[0030] The embodiments illustrated in FIGS. **4***b* and **5** have fold lines **18** in the corner areas of the top **30** that facilitate folding the top **30**. Once folded, the lateral wall **15** of the top **30** borders on the lateral wall **16** and comes in contact with the lateral walls **16***a* and **15***a*. Corner stiffeners **17** promote the stability of the top **30** when the top **30** is in the unfolded frame-shape. These corner stiffeners **17** are preferably attached in all four corners.

[0031] FIG. **1***b* and FIG. **4***a* illustrate that in addition to the top **30**, the transport container **20** of the transport container system **10** also comes in two physical shapes. So that the transport container system **10** is present in the optimum space-saving shape for use during transport, the top **30** is removed from the transport container **20** and the top **30** and the transport container **20** are placed in the folded or collapsed condition. At the utilization site for the transport container system **10**, the top is unfolded, the foldable transport container **20** is opened up, and the top **30** is detachably engaged with the non-foldable or foldable transport container **20**. The top **30** now leads to the desired enlargement of the volume capacity of the transport container **20**, this providing optimum utilization of the volume capacity of the transport container **20**. The height for the top that is available in different heights at the utilization site can be selected that ensures optimum filling of the transport container system **10** given some non-optimum size of the transport container **20** present.

[0032] FIG. **5** illustrates another exemplary embodiment of an inventive top, whereby only one fastening means **32** is attached to each of the sides **15**, **15***a*, **16**, **16***a*. As FIGS. **5***a* and **5***b* illustrate, each of the fastening means is attached in the center of the sides **15**, **15***a* and/or **16**, **16***a*.

What is claimed is:

1. Top for a transport container system comprising a non-foldable or foldable crate which has a rectangular bottom and four rigid lateral walls adjoining the bottom and defining a rectangular opening in a plane parallel to the opening, the top comprising

four rigid lateral walls connected in the configuration of a rectangular frame of sufficient strength to permit transport container stacking and defining an opening matching the opening of the crate, whereby the top is configured for augmenting height of the crate thereby to increase volumetric capacity of the container system,

the top having a respective fold line at each corner thereof and being foldable along the fold lines into a compact configuration when not in use.

2. Top according to claim **1**, wherein

the top is dimensioned so as to fit on a crate of dimensions that fit a EURO palette.

3. Top according to claim **1**, wherein

the lateral walls of the top each have an irregular edge for being received in mating engagement with irregular edges of the lateral walls of the crate thereby to provide stable stackability of a plurality of transport containers.

4. Transport container system comprising

a top according to claim **1**, and

fasteners attached to the top for engagement with the lateral walls of the crate.

5. Top according to claim **1**, wherein

the lateral walls are comprised of cardboard and are 3 to 10 cm high.

6. Top according to claim **1**, wherein

the lateral walls are 3 to 6 cm high.

* * * * *