July 4, 1950 K. C. DE WALT 2,513,920

FLUID-COOLED ELECTRIC DISCHARGE DEVICE

Filed Aug. 14, 1947

Fig.1.

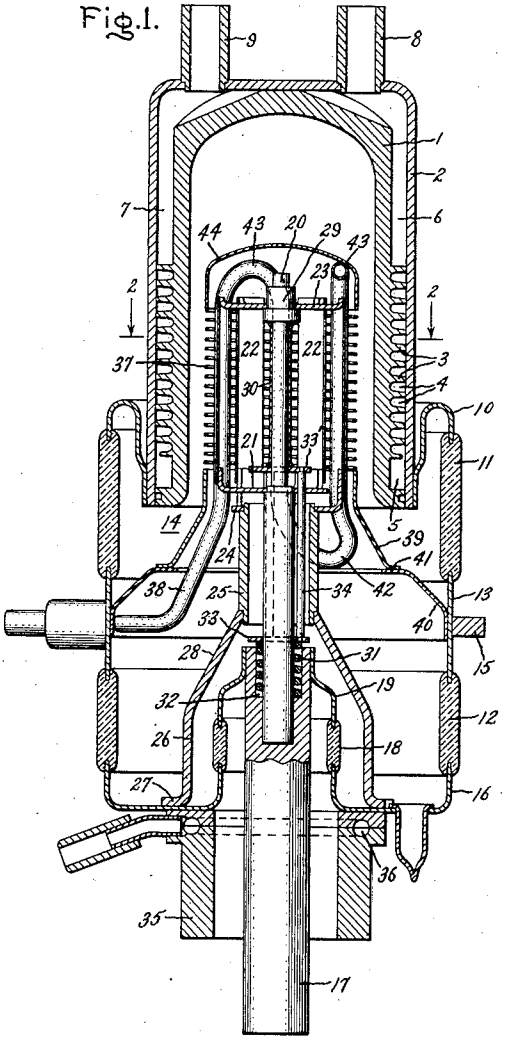

Fig.3.

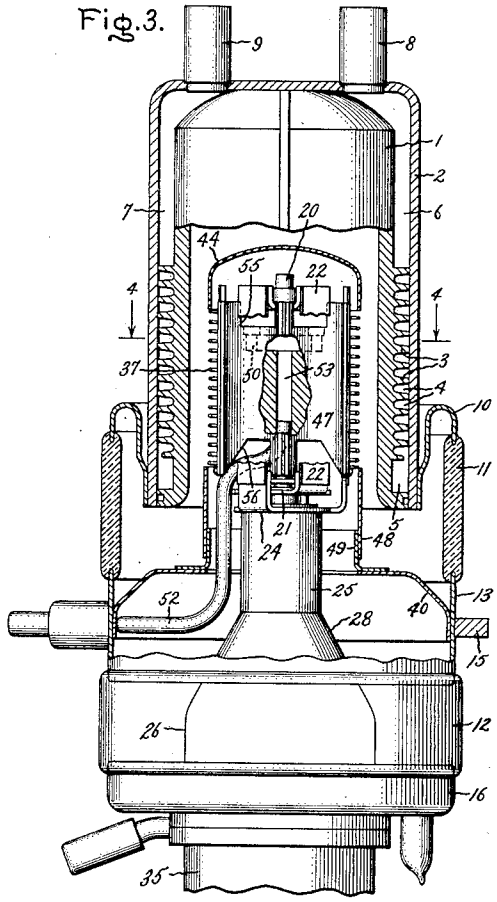

Fig.2.

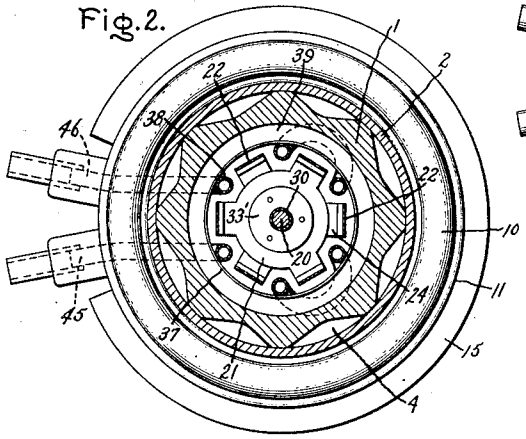

Fig.4.

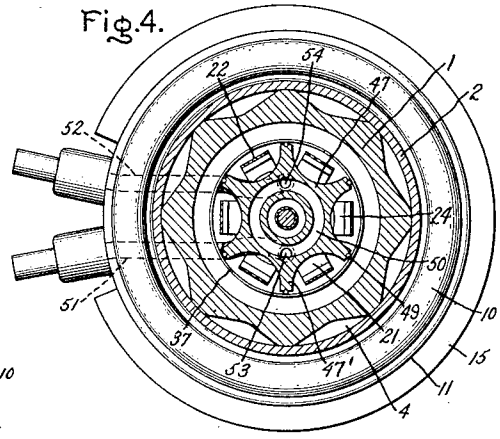

Inventor:
Kenneth C. DeWalt,
by Merton D. Morse
His Attorney.

Patented July 4, 1950 2,513,920

UNITED STATES PATENT OFFICE

2,513,920

FLUID-COOLED ELECTRIC DISCHARGE DEVICE

Kenneth C. De Walt, Scotia, N. Y., assignor to General Electric Company, a corporation of New York

Application August 14, 1947, Serial No. 768,697

5 Claims. (Cl. 250—27.5)

1

My invention relates to improved fluid-cooled electric discharge devices and particularly to devices of this character adapted for high-frequency, high-power applications.

It is difficult to extend the power rating of high-frequency electric discharge devices since the requirements that the lead-in inductance and inter-electrode capacities be kept small tend to result in a small compact structure. This makes it extremely difficult to dissipate the amount of heat that must be dissipated for higher power ratings. In accordance with an important aspect of my invention, I provide an improved high-frequency electric discharge device including a novel fluid-cooled grid electrode structure. My invention is an improvement on the prior Elder and Crawford invention, described and claimed in copending application Serial No. 650,701, filed February 27, 1946, which issued as U. S. Patent No. 2,489,872 on November 29, 1949.

It is an object of my invention to provide a new and improved high-frequency electric discharge device.

It is another object of my invention to provide a new and improved fluid-cooled electric discharge device.

It is a still further object of my invention to provide an improved fluid-cooled grid electrode structure.

My invention will be better understood by reference to the following description taken in connection with the accompanying drawing, and its scope will be pointed out in the appended claims.

In the drawing, Figure 1 is an elevational view in section of an electric discharge device embodying my invention; Figure 2 is a sectional view taken along the line 2—2 of Figure 1; Figure 3 is an elevational view partially in section of a modification of my invention, and Figure 4 is a sectional view taken along the line 4—4 of Figure 3.

Referring now to Figure 1 of the drawing, I have shown my invention embodied in an electric discharge device of the transmitting type and including a generally cylindrical open ended anode 1 which together with a water jacket 2 forms a part of the envelope of the device. As illustrated, the lower portion of the anode is provided with helical fins 3 which define a plurality of cooling passages 4. These passages communicate with a header 5 at the lower end of the anode and with a pair of chambers 6 and 7 provided between the upper portion of the anode and the water jacket and communicating respectively with inlet and outlet conduits 8 and 9. The chambers 6 and 7 do not communicate with each other except through the spiral passages so that the fluid circuit includes, in series, the chamber 6, certain of the spiral passages 4, the header 5, the remaining passages 4, and the chamber 7. As illustrated in the drawing, the water jacket is bonded to the lower end of the anode and is joined to the remainder of the envelope by a reversely bent generally annular sheet-metal member 10 which is bonded at one end to the water jacket 2 and at the opposite end is sealed to a cylindrical glass wall member 11. A second glass wall member 12 is joined to the member 11 by a cylindrical sheet-metal member 13 which is sealed by the adjacent edges of the members 11 and 12. The member 13 provides a support for the grid structure of the device designated generally by the number 14 as well as an externally accessible terminal for the grid structure. A reinforcing terminal ring 15 is bonded to the exterior of the sheet-metal cylinder 13.

2

The remainder of the envelope is constructed to provide a pair of concentrically arranged terminals for the filamentary cathode structure. As illustrated, a sheet-metal member 16 of generally annular shape and having a substantially U-shaped cross section in a radial plane, provides one terminal for the cathode as well as an end portion of the tube envelope. A second cathode terminal is provided by the solid cylindrical conductor 17 arranged within the annular member 16 and joined to the inner edge thereof by a glass cylinder 18 which is sealed at one edge to the member 16 and at its opposite edge to a metal member 19 bonded to the inner end of the terminal 17. The glass ring 18 and member 19 together with the inner flange of the terminal member 16 provide a reentrant portion at the end of the tube envelope and the members 16 and 17 provide concentrically arranged terminals and supports for the cathode structure. As illustrated, in the drawing, a centrally arranged rod 20 is supported in a recess formed in the inner end of the central terminal 17 and is rigidly secured thereto. A support and terminal for one-half of the cathode elements are provided by a spider 21 supported in fixed relation to the rod 20 at a point adjacent the lower end of the anode. In the particular embodiment illustrated, the cathode elements 22 are in the form of flat ribbons of thin sheet nickel or similar material which are coated on the exterior surfaces with a suitable mixture of alkaline earth

oxides for improving the electron emitting properties of the elements. As shown in Figure 2, the spider 21 has three equally spaced arms which are turned upwardly at their extremities and are bonded to the cathode elements. A cathode supporting spider 23 is supported in spaced relation to the spider 21 and adjacent the free end of the centrally located rod 20. This spider is provided with six arms which are bonded to the upper ends of the cathode elements. The lower ends of the remaining three cathode elements are bonded to the arms of a third spider 24 which is supported in fixed and electrically conducting relation with respect to the envelope and terminal member 16 by sleeves 25 and 26. The sleeve 26 is provided with an outwardly directed flange 27 which is bonded to the inner surface of the envelope wall 15 and with a conical portion 28 which is bonded to the smaller sleeve 25.

The upper filament supporting spider is urged upwardly by a filament tensioning construction to maintain the filament under tension during operation. The spider is centered by a bearing member 29 of insulating material which slides on the rod 20 and which is engaged by a metal sleeve 30 surrounding the central supporting rod 20. The sleeve 30 is in turn biased upwardly by a compression spring 31 received within a recess 32 provided in the inner end of the terminal 17 and a motion transmitting structure including washers 33 and 33' which are interconnected by a plurality (three in the illustrated embodiment) of rods 34. It will be apparent from the foregoing description that the cathode construction just described provides three parallel electrical paths between the terminals 16 and 17 with each path including two of the cathode elements 22 in series. In order to provide for effective cooling of the seals between the member 16 and the glass rings 12 and 18, a cooling block and terminal 35 in the form of a cylinder is brazed to the envelope wall 16. The cylindrical member 35 is provided with a cooling passage 36 in proximity to the wall of the envelope.

In accordance with an important aspect of my invention, I provide an improved fluid-cooled grid structure supported from the metal ring 13 of the envelope wall. As illustrated, in the drawing, the grid proper is provided with a helically wound conductor 37 which is supported from the cylindrical terminal 13 by means of a generally cylindrical array of folded conduit 38 and a pair of supporting sleeves 39 and 40. The sleeve 40 is bonded to the envelope terminal member 13 as provided with an inwardly directed flange 41 which supports the sleeve 39. The supporting and cooling structure provided by the conduit 38 is in the form of a plurality of series connected loops of conduit which provide a circular array of grid wire supports. The lower loop portions 42 are bent outwardly at the lower ends thereof and are bonded to the inner surface of the tapered sleeve 39. The upper loops 43 are bonded to and provide a support for a grid cap 44. The free ends 45 and 46 of the conduit 38 are sealed through the terminal member 13 and provide externally accessible inlet and outlet fluid connections for the grid structure.

It is apparent from the foregoing detailed description that the present invention provides for an adequately cooled system of electrodes in a structure which also provides for relatively short conductive connections with each of the electrodes so that the lead-in inductance is minimized. The operation of a device embodying my invention, as described above, indicates that a power output of 10 kilowatts at a frequency of 220 megacycles is readily obtained with a very compact tube structure.

In Figures 3 and 4, I have illustrated a modification of my invention which is, as far as its general organization is concerned, similar to that shown in Figures 1 and 2 and the same reference numerals have been applied to the corresponding parts. In the modified form of my invention, the major difference is in the water-cooled grid electrode structure. As shown in Figures 3 and 4, the grid conductor 37 is supported by a water-cooled spider or hub 47 which is bonded at its lower end to a grid supporting sleeve 48. The sleeve 48 is in turn bonded to a flange member 49 which is supported from the grid terminal sleeve 13 by a sleeve 40. As shown in Figure 4, the spider is provided with six radially extending arms 47' which provide a circular array of supports for the grid wire. A wire 49 of nickel is inserted in the face of each of the radially extending arms to provide a good bonding surface for the grid wire which is tantalum, molybdenum or tungsten. The grid structure is designed to be fluid cooled and is provided with an annular passage 50 near the upper end thereof which communicates with a pair of conduits 51 and 52 through longitudinal passages 53 and 54 formed in the body of the spider. As illustrated in Figure 4, the spider is provided with a central passage 55 of sufficient size to allow clearance around the filament tensioning structure. The spider is also recessed in the central portion of the lower end as shown at 56 in Figure 3 to accommodate the filament supporting spider 21 and the conduits 51 and 52.

While I have shown and described a particular embodiment of my invention, it will be apparent to those skilled in the art that many changes and modifications may be made without departing from my invention in its broader aspect, and I aim, therefore, in the appended claims to cover all such changes and modifications as fall within the true spirit and scope of my invention.

What I claim as new and desire to secure by Letters Patent of the United States is:

1. A fluid-cooled grid electrode structure comprising a cylindrical conductive sleeve forming a portion of an envelope wall and providing an externally accessible grid terminal, a conductive structure supported from said sleeve including a second cylindrical sleeve of smaller diameter than said first-mentioned sleeve and positioned in coaxial relation with respect thereto, a conductive structure supported from said second sleeve and providing a cylindrical array of supports for a grid conductor, a grid conductor wound upon said supports, said conductive structure having passages provided therethrough for cooling fluid and conduits extending through said first-mentioned sleeve and communicating with said passages to provide externally accessible inlet and outlet fluid connections.

2. A fluid-cooled grid electrode structure comprising a cylindrical conductive sleeve forming a portion of an envelope wall, a conductive structure supported from said sleeve including a second cylindrical sleeve of smaller diameter than said first-mentioned sleeve and positioned in coaxial relation with respect thereto, a conductive structure supported from said second sleeve and providing a cylindrical array of supports, said conductive structure having passages provided therethrough for cooling fluid and conduits ex-

tending through first-mentioned sleeve and communicating with said passages to provide externally accessible inlet and outlet fluid connections.

3. A fluid-cooled grid electrode structure comprising a cylindrical conductive sleeve forming a portion of an envelope wall, a conductive structure supported from said sleeve including a second cylindrical sleeve of smaller diameter than said first-mentioned sleeve and positioned in coaxial relation with respect thereto, a conductive structure providing a cylindrical array of supports extending within said second sleeve and secured thereto, said conductive structure having passages provided therethrough for cooling fluid and conduits extending through said first-mentioned sleeve and communicating with said passages to provide externally accessible inlet and outlet fluid connections.

4. A fluid-cooled grid structure including a conducting sleeve, a cylindrical array of conduits joined together at opposite ends providing a series fluid path, a conducting sleeve surrounding one end of said conduits and bonded thereto, a grid cap bonded to the other end of said conduits, a second sleeve forming a part of the envelope and supporting said grid structure, and a pair of conduits sealed through said sleeve and connected with said conduits to provide externally accessible fluid connections for said grid structure.

5. A fluid-cooled grid structure including a conducting sleeve, a cylindrical array of conduits joined together at opposite ends providing a series fluid path, a conducting sleeve surrounding one end of said conduits and bonded thereto, and a second sleeve forming a part of the envelope and supporting said grid structure and a pair of conduits sealed through said sleeve and connected with said conduits to provide externally accessible fluid connections for said grid structure.

KENNETH C. DE WALT.

REFERENCES CITED

The following references are of record in the file of this patent:

UNITED STATES PATENTS

Number	Name	Date
2,020,428	Mouromtseff	Nov. 12, 1935
2,441,349	Eitel et al.	May 11, 1948

FOREIGN PATENTS

Number	Country	Date
474,933	Great Britain	Nov. 10, 1937