PCT WORLD INTELLECTUAL PROPERTY ORGANIZATION
International Bureau

INTERNATIONAL APPLICATION PUBLISHED UNDER THE PATENT COOPERATION TREATY (PCT)

(51) International Patent Classification 6 :		(11) International Publication Number:
B29B 15/12, B05C 1/08	**A1**	**WO 95/18001**
		(43) International Publication Date: 6 July 1995 (06.07.95)

(21) International Application Number: PCT/EP94/04328

(22) International Filing Date: 27 December 1994 (27.12.94)

(30) Priority Data:
174,735 29 December 1993 (29.12.93) US

(71) Applicant: SHELL INTERNATIONALE RESEARCH MAATSCHAPPIJ B.V. [NL/NL]; Carel van Bylandtlaan 30, NL-2596 HR The Hague (NL).

(72) Inventors: IYER, Shridhar, Ratnaswamy; 16930 Ascot Meadow Drive, Sugar Land, TX 77479 (US). SHIRRELL, Charles, David; 22014 Joshua Kendall Lane, Katy, TX 77249 (US).

(81) Designated States: AM, AT, AU, BB, BG, BR, BY, CA, CH, CN, CZ, DE, DK, EE, ES, FI, GB, GE, HU, JP, KE, KG, KP, KR, KZ, LK, LR, LT, LU, LV, MD, MG, MN, MW, NL, NO, NZ, PL, PT, RO, RU, SD, SE, SI, SK, TJ, TT, UA, UZ, VN, European patent (AT, BE, CH, DE, DK, ES, FR, GB, GR, IE, IT, LU, MC, NL, PT, SE), OAPI patent (BF, BJ, CF, CG, CI, CM, GA, GN, ML, MR, NE, SN, TD, TG), ARIPO patent (KE, MW, SD, SZ).

Published
With international search report.
Before the expiration of the time limit for amending the claims and to be republished in the event of the receipt of amendments.

(54) Title: PROCESS FOR RESIN IMPREGNATION OF A POROUS WEB

(57) Abstract

A process is described for minimizing resin waste in the impregnation of a porous web with a thermosettable resin. The process involves the use of resin application means comprising a rotatable roller (4) on which is deposited a liquid-form thermosettable resin; passing a fibrous substrate (2) in countercurrent contact with the thermosettable resin on the rotating roller so as to transfer the thermosettable resin to the fibrous substrate (2), removing any untransferred resin from the rotating roller (4) and depositing the removed resin onto the fibrous substrate prior to contact thereof with the rotating roller; and passing the resin-containing fibrous web to a heating zone to partially cure the resin. The process is particularly suited for application of a solventless resin formulation to a glass web in the preparation of a prepreg for an electrical laminate.

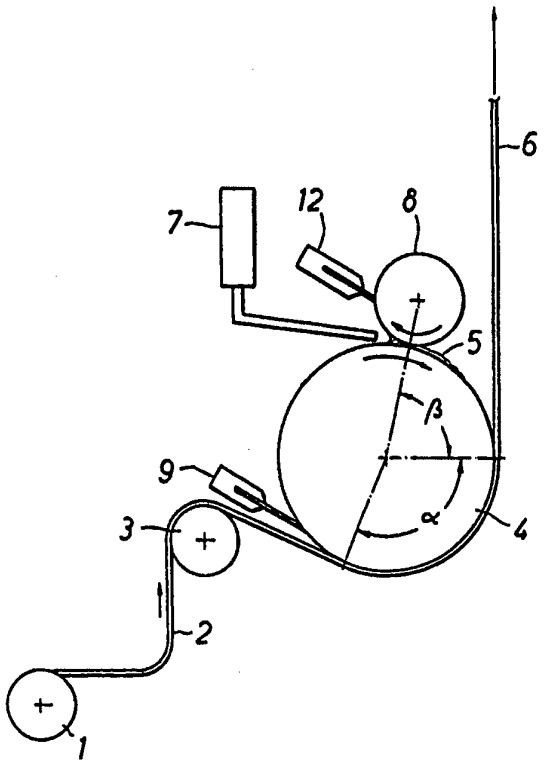

FOR THE PURPOSES OF INFORMATION ONLY

Codes used to identify States party to the PCT on the front pages of pamphlets publishing international applications under the PCT.

AT	Austria	**GB**	United Kingdom	**MR**	Mauritania
AU	Australia	**GE**	Georgia	**MW**	Malawi
BB	Barbados	**GN**	Guinea	**NE**	Niger
BE	Belgium	**GR**	Greece	**NL**	Netherlands
BF	Burkina Faso	**HU**	Hungary	**NO**	Norway
BG	Bulgaria	**IE**	Ireland	**NZ**	New Zealand
BJ	Benin	**IT**	Italy	**PL**	Poland
BR	Brazil	**JP**	Japan	**PT**	Portugal
BY	Belarus	**KE**	Kenya	**RO**	Romania
CA	Canada	**KG**	Kyrgystan	**RU**	Russian Federation
CF	Central African Republic	**KP**	Democratic People's Republic of Korea	**SD**	Sudan
CG	Congo			**SE**	Sweden
CH	Switzerland	**KR**	Republic of Korea	**SI**	Slovenia
CI	Côte d'Ivoire	**KZ**	Kazakhstan	**SK**	Slovakia
CM	Cameroon	**LI**	Liechtenstein	**SN**	Senegal
CN	China	**LK**	Sri Lanka	**TD**	Chad
CS	Czechoslovakia	**LU**	Luxembourg	**TG**	Togo
CZ	Czech Republic	**LV**	Latvia	**TJ**	Tajikistan
DE	Germany	**MC**	Monaco	**TT**	Trinidad and Tobago
DK	Denmark	**MD**	Republic of Moldova	**UA**	Ukraine
ES	Spain	**MG**	Madagascar	**US**	United States of America
FI	Finland	**ML**	Mali	**UZ**	Uzbekistan
FR	France	**MN**	Mongolia	**VN**	Viet Nam
GA	Gabon				

PROCESS FOR RESIN IMPREGNATION OF A POROUS WEB

This invention relates to the impregnation of a porous web with a thermosettable resin. In a specific embodiment, the invention relates to a process and apparatus for reducing resin scrap in the impregnation of a fibrous glass substrate with a solventless thermosettable resin system.

The manufacture of the cured thermosettable resin base of an electronic circuit board begins with the impregnation of a fibrous glass substrate with a liquid thermosettable resin system. The resin-impregnated substrate is then partially cured to form a "prepreg". A set of layered prepregs is heated under pressure to fully cure the resin and to form a hard laminate, which serves as the base for electric circuitry.

Although there exist thermosettable resins, such as low molecular weight epoxy resins, which are liquid at room temperature, current circuit board requirements make it necessary to use high-performance resins systems which are solids or viscous liquids at room temperature and to apply the resins to the substrate in melt or solution form. Processing thermosettable resins in the melt, however, is difficult because the high temperatures necessary to melt the resin cause the resin to cure prematurely, resulting in poor "wet-out", or saturation of the substrate by the resin.

Current commercial processes for preparing prepregs apply the resin to the substrate using an organic solution of the resin. Solution processes must include a step, usually carried out in conjunction with partial curing of the resin, in which the solvent is removed from the prepreg by heating the solvent to its volatilization temperature. Such a process has a number of disadvantages: First, it requires the disposal or discharge of the

organic volatiles. Second, volatilization of the solvent from the uncured resin can result in the presence of voids and irregularities in the prepreg and in the cured laminate. Furthermore, a considerable amount of time is required for the solvent removal step.

A process has been proposed for application of a solventless thermosettable resin to a glass web which involves depositing the solventless resin onto a rotating roller and passing the glass web in countercurrent contact with the deposited resin so as to transfer the resin to the web, which is then passed to a heating zone for partial curing of the resin. This process has been described in European patent No. 476 752. It has, however, been found that this resin application process can produce an undesirably high amount of scrap resin as a result of retention of a certain amount of resin on the rotating roller.

It is therefore an object of the invention to provide an improved process for impregnation of a fibrous substrate with a solventless thermosettable resin system which reduces the quantity of scrap resin produced in the process.

The present invention, therefore, relates to a process for impregnating a porous web with a thermosettable resin by depositing uncured liquid-form thermosettable resin onto a rotating roller, passing the porous web in countercurrent contact with the roller so as to absorb a major portion of said resin, and passing the resin-containing web to a heating zone for partial cure of the resin, in which process resin remaining on the rotating roller prior to passage of said remaining resin through a 360° rotation of said roller is removed and said remaining resin is deposited onto the porous web prior to initial contact of the web with the rotating roller.

In a typical example of the invention, a process is provided for impregnating a porous web with a thermosettable resin, the process comprising: providing resin application means comprising a

rotating roller; depositing onto the rotating roller a liquid-form thermosettable resin formulation comprising an essentially uncured thermosettable resin; passing a porous web in countercurrent contact with the thermosettable resin formulation on the rotating roller so as to transfer the major portion of the thermosettable resin formulation to the porous web; removing any untransferred resin from the rotating roller and depositing said resin onto the porous web as the substrate approaches the rotating roller; and passing the resin-containing porous web to a heating zone to partially cure the resin and form a prepreg comprising the porous web and the partially-cured thermosettable resin.

The invention process provides a technique for minimizing resin waste in the impregnation of a fibrous substrate with a liquid-form thermosettable resin. The process is particularly suitable for impregnating a glass web with a solventless resin system in the preparation of a prepreg for ultimate use in electrical laminates. The object of the resin application process of the invention is to achieve thorough wet-out of the substrate by the liquid resin while minimizing resin waste by directing any unabsorbed resin onto the porous substrate as the substrate approaches the rotating roller.

In the resin application process according to the invention, a fibrous substrate is impregnated with a liquid-form thermosettable resin. Although the invention process can be practiced with solvent-borne resins, the preferred resin system for the invention process is one which does not contain an organic solvent, which includes both water-borne resin systems and solventless resin systems. For a solventless resin system, the liquid form can be achieved by use of a thermosettable resin which is a low-viscosity liquid at room temperature or which has been heated to a temperature effective to achieve sufficiently low viscosity for thorough wetout of the substrate. In the latter case, of course, the resin system (the thermosettable resin and any curing compounds used therewith) must not cure to any substantial degree at its melting temperature

over the length of time of the substrate impregnation process.

The invention resin application process and apparatus can be described by reference to Figure 1. The substrate 2, generally any porous material in chopped, mat or woven form, preferably a web of woven glass fibers, is advanced from delivery means 1, which will generally including automatic means for advancing the web at a selected rate and with a selected web tension. The fibrous web is optionally heated by, for example, infrared heaters, prior to advancement to the resin application zone. Guiding means 3 is positioned to direct the web toward resin applicator roller 4 at an arc of contact α and to position the advancing web so as to receive any unabsorbed resin removed from the roller by doctor blade 9. Angle α can vary depending upon the overall configuration of the application scheme, but to achieve minimum resin waste will generally be within the range of 45 to 180 degrees, preferably 90 to 150 degrees, with a currently most preferred arc of contact of 120 to 150 degrees to maximize resin impregnation and heat transfer from roller to substrate. The amount of unabsorbed resin is usually less than 20% of the amount applied to the rotating roller, preferably less than 15%, more preferably less than 10%.

Rotating roller 4 delivers liquid resin film 5 to a first surface of web 2 passing counterdirectional thereto. Applicator roller 4 is maintained at a temperature effective to keep resin film 5 in essentially uncured, liquid form. This temperature will vary depending upon the resin, but will generally be within the range of 50 to 250°C, preferably 100 to 200°C. The speed of rotation of applicator roller 4, the tension in web 2 as it contacts resin film 5, and the speed at which web 2 is advanced to the applicator roller are coordinated to provide good wetout of the web. These specifications can vary widely depending, for example, upon the resin system, the type of web materials, and the heating capacity of the downstream B-staging unit. In general, the speed of rotation of applicator roller 4 will be within the range of 70 to 160 percent of

web speed, preferably 100 to 140 percent of web speed; the tension in web 2 will generally be within the range of 0.4536 to 1.3608 kg (1 to 3 pounds) per 2.540 cm (linear inch), preferably 0.6804 to 0.9072 kg per 2.540 cm (1.5 to 2 PLI); and the speed of advancement of the web through the resin application zone will be within the range of 0.04064 m/s to 1.016 m/s (8 ft/min to 200 ft/min), preferably 0.127 m/s to 0.635 m/s (25 to 125 ft/min).

Resin film 5 is applied to applicator roller 4 by means of resin delivery means, shown here as nozzle 7 capable of applying a controlled quantity of liquid resin to the rotating surface of the applicator roller. Nozzle 7 can be associated with any means for continuous delivery of the resin in liquid form, at either ambient or elevated temperature. Delivery of the resin will be carried out at volume rates synchronized with the speed of the moving web so as to deliver a predetermined volume of resin to the web and to minimize residence time within the resin delivery system. Resin delivery means can include, for example, a temperature-controlled static blender, dynamic mixer or a mixing extruder with an outlet into nozzle 7.

Metering means, shown here as set gap roller 8 located between nozzle 7 and the point of contact of resin film 5 and the advancing web, is used, in conjunction with resin delivery means 7, to control the amount of liquid resin which is delivered to the web. Set gap roller 8 is preferably a smaller-diameter roll than applicator roller 4 rotating countercurrently with respect to the rotation of the applicator roller at a rotation speed within the range of 1 to 50, preferably 8 to 35, percent of the speed of the web. Backflow of resin from the application area can be prevented by positioning the resin deposition area and the set gap roller forward with respect to applicator roll 4, i.e., at an angle β less than 90° with respect to the horizontal radius so that gravitational forces prevent the resin from flowing down the applicator roll in the counterclockwise direction. Movement of resin from the deposition

area can be prevented by optional doctor blade 12. Control of the rate at which resin is applied to the web is achieved in the first instance by careful setting of the gap between the set gap roller 8 and the applicator roller 4 so as to maintain a uniform film thickness. Secondly, the rotational speed of the applicator roller is coordinated with web speed so as to achieve transfer of the resin film onto the moving web. In addition, because no backup roller is required to control the contact of the moving web with the applicator roller, control of web tension is maintained to ensure stable operation of the resin application process.

Resin removal means 9, shown here as a scraper or doctor blade, serves to remove from the applicator roller any resin which remains on the roller after contact between resin film 5 and advancing web 2, prior to passage of this remaining resin through a 360° rotation of the roller. The resin removal means is located with respect to the roller and the advancing porous web so that any resin coming in contact therewith is deposited directly onto the porous web prior to contact of the web with the applicator roller.

The wetout of the web by the resin is achieved by pressure-driven flow at the applicator roller 4 and by capillary action within the web. The capillary-induced flow of resin into the web depends upon the viscosity and surface tension of the resin as well as the porosity of the web and surface tension of the web fibers. For impregnation of conventional glass web styles, resin formulations having viscosities within the range of 0.05 to 0.6 Pa.s (0.5 to 6 poise), typically 0.1 Pa.s (one poise) and resin surface tension within the range of 250 to 400 μN/cm, typically 320 μN/cm (25 to 40, typically 32 dynes/cm), can be used. Resin infusion times will vary from 0.1 second to 0.5 second under typical conditions. For a web speed of 65 m/min (200 ft/min), for example, the web will move approximately 0.5 m (1.6 ft) in 0.5 seconds.

The prepregging process of the invention can be described in general terms by reference to Figure 2. Fibrous web 43 is delivered

to resin application zone 44 by a suitable automated web advancement system 42 with means for measuring and controlling advancement speed and web tension. Web tension control devices are known in the art. For example, unwind roll 41 can include a brake which, in combination with a front-end dancer roll, maintains a preset web tension programmed into a pull-in unit located between the dancer roll and the resin application zone. Similarly, proper downstream web tension can be maintained by a dancer roll which moderates the speed of a variable-speed constant-diameter roll located downstream from the heating zone.

The fibrous web is advanced through resin application zone 44, which is here shown in a vertical orientation but which can be carried out at an angle with respect to vertical of up to 45° to enhance wetout of the web. Application zone 44 includes resin delivery means, including a mixing portion for blending the resin and curing system, and temperature control as necessary to maintain the resin system at the desired viscosity. Optional small-diameter conditioning rollers can be used to promote resin penetration of the web after application and before cure.

Resin-saturated web 45 is advanced from the resin application zone to resin cure zone 46, typically a forced air heated treater, wherein the resin-saturated web is heated by exposure to elevated temperature or IR radiation, for example, to partially cure the resin without gelation, a process known as "B-staging." The temperature in the treatment zone will vary depending upon the resin system and the degree of resin cure desired, usually up 15%, preferably 10%, more preferably 5%, of the curable groups, e.g. epoxy groups, but will generally be within the range of 80 to 250 °C, preferably 120 to 180 °C. The resin-saturated web will be subjected to the B-staging treatment for a time sufficient to impart the desired degree of cure, generally 10 seconds to 8 minutes. The web is advanced from resin treatment zone 46 in the form of a prepreg 47, which is rolled at uptake roll 48 for storage or,

alternatively, is passed directly to lamination.

A laminate is fabricated by subjecting a set of layered prepregs to conditions effective to cure the resin and to integrate the prepregs into a laminated surface. The laminate can optionally include one or more layers of a conductive material such as copper. Laminating conditions generally include a time of 30 minutes to 4 hours, preferably 1 hour to 2 hours, a temperature of 160 °C to 300 °C, preferably 170 °C to 200 °C and a pressure of 3.516 to 35.16 kgf/cm^2 (50 to 500 psi). The laminate can optionally be "post-cured" by heating at a temperature of 200 to 230 °C at ambient pressure for 1 to 6 hours to improve thermal properties.

Thermosettable resins which can be used in preparing electrical laminates include epoxy resins, imide resins, cyanate resins, propargyl ethers, and blends and reaction products thereof. The currently favoured resins, because of their low cost and cured properties, are epoxy resins, alone or blended with a tri- or tetrafunctional epoxy resin. Further, reference is made to EP 476,752.

An epoxy resin-containing laminating composition will include a curing agent. Effective curing agents for epoxy resins are known to include, for example, amines, acids, anhydrides, phenols and imidazoles. See also EP 476,752. The presently preferred curing agents for imparting optimum laminating properties to epoxy compositions are phenolic compounds which have a phenolic functionality greater than 1.75. The preferred phenolic curing agents are phenolic novolacs prepared by reacting a dihydroxy phenol such as resorcinol or bisphenol-A with formaldehyde in acid solution. The preferred phenolic novolac resin curing agents are bisphenol-A novolacs having a weight per phenolic group of 60 to 500, preferably 60 to 300, and, on the average, more than 2 phenolic hydroxyl groups per molecule, preferably 3 to 5. Such phenolic novolacs are available under the tradename EPIKURE DX-175 (EPIKURE is a trade mark) from Shell International Chemical Company. The

phenolic novolac curing agent will be present in the composition in an amount effective to cure the epoxy resin, which will generally be a stoichiometric amount of 0.75 to 1.25 equivalents per equivalent of epoxy resin. In terms of weight percent, the curing agent will be present in an amount generally from 10 to 70 weight percent, preferably 15 to 50, most preferably 15 to 40, based on the combined weight of epoxy resin and curing agent.

The curing agent, for flame-proof applications, can be a mixture of the phenolic resin curing agent and a brominated phenolic curing agent. The brominated phenolic curing agent can be any monomeric or polymeric compound having at least one free phenolic hydroxyl group and one or more bromine atoms on the aromatic ring. Examples of suitable brominated phenolic curing agents include brominated bisphenol-A novolac, brominated phenolic novolac, brominated polyphenylene oxide, brominated bisphenol-A and brominated bisphenol-A carbonate, for example. The brominated bisphenol-A will be present in an amount effective to increase flame retardancy, generally an amount up to 40 weight percent, usually 10 to 30 weight percent, based on the combined weight of epoxy resin and curing agent(s).

In order to promote faster and/or lower temperature cure of the resin components of the composition, an optional cure accelerator may be used. Many suitable accelerators, such as ureas, tertiary amines, imidazoles, phosphenes, octoates and boron trifluorides, for example, are known in the art. The presently preferred class is imidazoles such as 1-methyl imidazole, 2-ethyl imidazole, 2-methyl imidazole, 2-methyl-4-ethyl imidazole and isopropyl imidazole. Because of its availability and performance characteristics, 2-methyl imidazole is the preferred accelerator. The accelerator will be present in the composition in an amount effective to increase the cure rate and/or lower the cure temperature of the composition, generally in an amount from 0.01 to 7, preferably from 0.05 to 3 weight percent, based on the weight of the composition.

The thermosettable resin system must be designed within certain specifications dictated by the resin application process parameters. The resin formulation must be a liquid at a temperature at which the resin does not undergo cure over the time necessary for application of the resin to the substrate. The resin system must be of sufficiently low viscosity that it achieves good "wetout", or saturation of the web, without the use of a pressure backup roll at the point of application. Once applied to the substrate, however, the resin system must have sufficient viscosity that it does not drop from the resin-containing web before it reaches the heating zone. Resin formulations having viscosities in the range of 0.05 to 1.0 Pa.s (0.5 to 10 poise), preferably 0.05 to 0.6 Pa.s (0.5 to 6 poise), are most suitable. The currently preferred resin system is a blend of a diglycidyl ether of bisphenol-A having a WPE of 175-190, a brominated diglycidyl ether of bisphenol-A having a WPE of 310-350 and a bromine content of 30-50 percent, a phenolic novolac curing agent, and 2-methylimidazole accelerator.

The process of the invention can optionally be practiced with a thermosettable resin formulation which includes an aqueous organic solvent or diluent present in an amount effective to decrease the viscosity of the system for ease of processing. Polar organic solvents such as ketones, alcohols and glycol ethers, for example, are suitable. The chosen solvent will generally have a boiling point less than about 160 °C. The preferred solvents for epoxy resins are ketones such as acetone, methyl ethyl ketone and methyl isobutyl ketone, for example, and solvent mixtures of these with an alkylene glycol ether such as propylene glycol monomethyl ether. The proportion of solid components in the composition can vary widely depending upon the amount of the other constituents present and the intended application of the composition, but the solvent in a solvent-borne system will generally constitute from 15 to 50 weight percent of the total weight of the formulation.

Example 1

This example demonstrates the scrap reduction achieved by the practice of the invention process. In the invention runs, a single-roller resin applicator was used with a web angle of contact of 135 degrees. A doctor blade was positioned with respect to the roller and the advancing glass web so as to scrape unabsorbed resin from the roller onto the web prior to contact of the web with the applicator roller. Comparison runs were run with an identical resin applicator, except that the angle of web contact was 125° and a catch pan was placed below the applicator roller to collect the resin removed by the doctor blade.

Table 1 shows resin scrap under various application conditions for the comparison runs. Use of the invention resin application design resulted in 0 scrap.

Table 1

Run	Line Speed (inches/min)	Pump (rpm)	Total Resin (gms)	Resin Scrap (gms)	% Scrap
1	200	200	3630	66	1.8
2	240	200	3025	102	3.4
3	240	200	3025	194	6.4
4	240	110	1650	86	5.2
5	200	200	3630	95	2.6
6	200	110	1980	218	11
7	240	200	3025	94	3.1
8	200	110	1980	123	6.2
9	240	192	2900	0	0
10	240	110	1650	0	0

In the table, pump rpms of 110 and 200 correspond approximately to resin flow rates of 660 and 1210 g/min, respectively. In Table 1,

column 2, 1 inch/min corresponds to 2.540 cm/min. Total resin (g) is calculated for a prepreg length of 15.24 m (50 feet). For example, in run 1, total resin =

$$50\ \text{ft} \times \frac{1\ \text{minute}}{200\ \text{inch}} \times \frac{12\ \text{inch}}{\text{ft}} \times \frac{1210\ \text{g}}{\text{minute}} = 3630\ \text{g}.$$

C L A I M S

1. A process for impregnating a porous web with a thermosettable resin by depositing uncured liquid-form thermosettable resin onto a rotating roller, passing the porous web in countercurrent contact with the roller so as to absorb a major portion of said resin, and passing the resin-containing web to a heating zone for partial cure of the resin, in which process resin remaining on the rotating roller prior to passage of said remaining resin through a 360° rotation of said roller is removed and said remaining resin is deposited onto the porous web prior to initial contact of the web with the rotating roller.

2. A process according to claim 1 in which the arc of contact of the porous web on the rotating roller is within the range of 45 to 180 degrees.

3. A process according to claim 1 or 2 in which said porous web comprises glass fibers.

4. A process according to any of claims 1 to 3 in which the porous web is advanced to said rotating roller at a speed within the range of 0.127 m/s (25 ft/min) to 0.635 m/s (125 ft/min).

5. A process according to claim 2 in which the arc of contact of the porous web on the rotating roller is within the range of 90 to 150 degrees.

6. A process according to any of claims 1 to 5 in which the rotating roller is maintained at a temperature within the range of 50 to 250 °C.

7. A process according to claim 2 in which the arc of contact of the porous web on the rotating roller is within the range of 120 to 150 degrees.

8. A process according to any of claims 1 to 7 in which the remaining resin is removed from the rotating roller by contact of

said remaining resin with a doctor blade.

9. A process according to any of claims 1 to 8 in which the thermosettable resin is an epoxy resin.

10. An apparatus for impregnating a porous web with a thermosettable resin, the apparatus comprising:

resin application means comprising a moving surface, especially a rotating roller;

means for controlling the speed of the moving surface;

resin delivery means comprising a resin chamber and means for depositing liquid-form resin therein onto said moving surface;

means for advancing, at a controlled rate and web tension and in a countercurrent direction with respect to the direction of the moving surface, a porous web to the moving surface and in contact with thermosettable resin deposited thereon;

means for maintaining sufficient tension in the porous web to enable the porous web to absorb thermosettable resin from the moving surface; and

means to remove resin remaining on the moving surface after the contact between the porous web and the moving surface carrying the thermosettable resin, these means and the porous web arranged in such a way that said remaining resin is deposited onto the porous web prior to initial contact of the web with the moving surface.

FIG.1

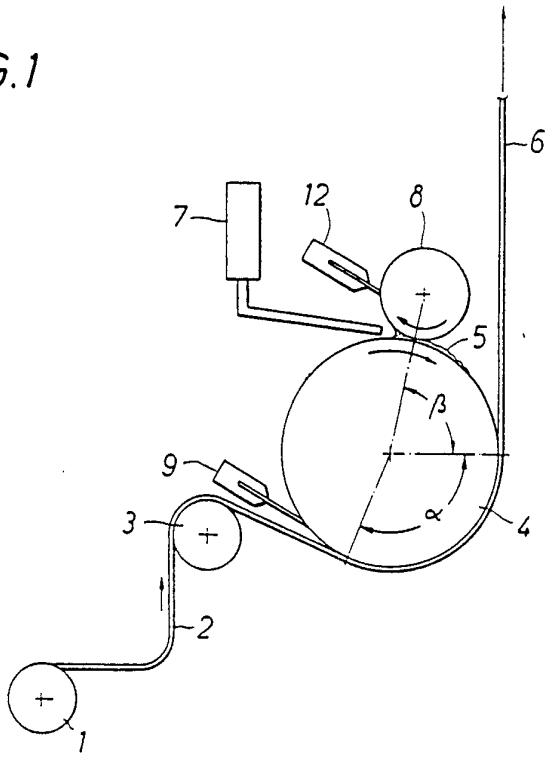

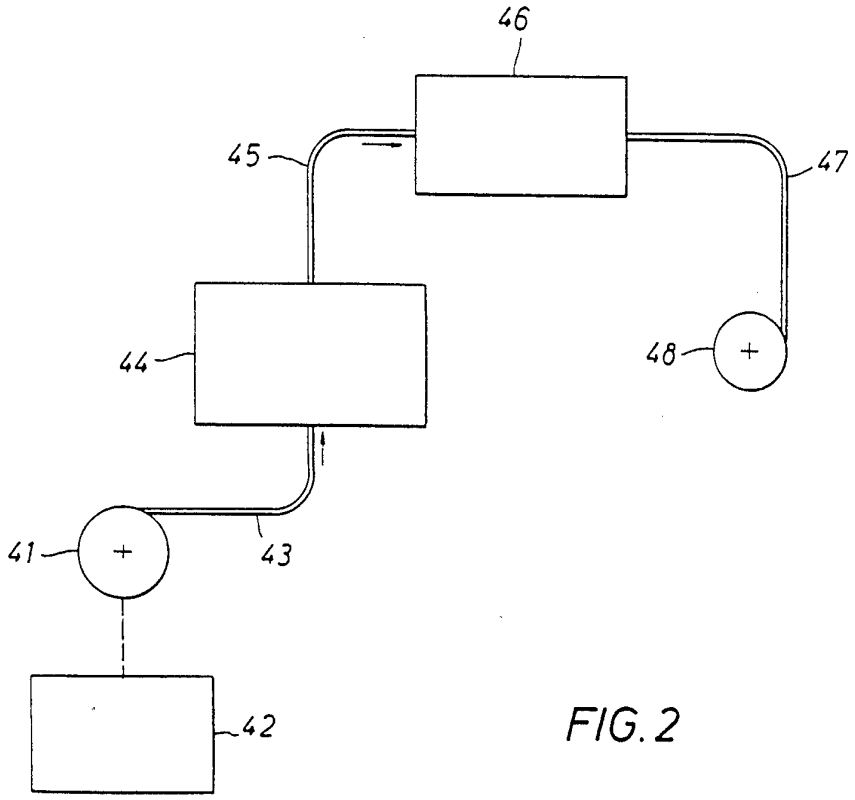

FIG. 2

INTERNATIONAL SEARCH REPORT

International Application No
PCT/EP 94/04328

A. CLASSIFICATION OF SUBJECT MATTER
IPC 6 B29B15/12 B05C1/08

According to International Patent Classification (IPC) or to both national classification and IPC

B. FIELDS SEARCHED

Minimum documentation searched (classification system followed by classification symbols)
IPC 6 B29B B29C B05C D06N D06B B05D

Documentation searched other than minimum documentation to the extent that such documents are included in the fields searched

Electronic data base consulted during the international search (name of data base and, where practical, search terms used)

C. DOCUMENTS CONSIDERED TO BE RELEVANT

Category °	Citation of document, with indication, where appropriate, of the relevant passages	Relevant to claim No.
A	EP,A,0 476 752 (SHELL INTERNATIONALE RESEARCH MAATSCHAPPIJ) 25 March 1992 cited in the application see page 4, line 7 - line 10 see figures 1,3 ---	1-10
A	NL,A,289 083 (JOZSEF DEMETER) 25 March 1965 see page 4, line 18 - page 5, line 15 see figure 1 ---	1,10
A	DE,U,87 17 966 (VITS MASCHINENBAU GMBH) 9 April 1992 see figure 1 -----	1,10

☐ Further documents are listed in the continuation of box C.

☒ Patent family members are listed in annex.

° Special categories of cited documents :

"A" document defining the general state of the art which is not considered to be of particular relevance

"E" earlier document but published on or after the international filing date

"L" document which may throw doubts on priority claim(s) or which is cited to establish the publication date of another citation or other special reason (as specified)

"O" document referring to an oral disclosure, use, exhibition or other means

"P" document published prior to the international filing date but later than the priority date claimed

"T" later document published after the international filing date or priority date and not in conflict with the application but cited to understand the principle or theory underlying the invention

"X" document of particular relevance; the claimed invention cannot be considered novel or cannot be considered to involve an inventive step when the document is taken alone

"Y" document of particular relevance; the claimed invention cannot be considered to involve an inventive step when the document is combined with one or more other such documents, such combination being obvious to a person skilled in the art.

"&" document member of the same patent family

1

Date of the actual completion of the international search
27 March 1995

Date of mailing of the international search report
11 -05- 1995

Name and mailing address of the ISA
European Patent Office, P.B. 5818 Patentlaan 2
NL - 2280 HV Rijswijk
Tel. (+31-70) 340-2040, Tx. 31 651 epo nl,
Fax (+31-70) 340-3016

Authorized officer
Lanaspeze, J

Form PCT/ISA/210 (second sheet) (July 1992)

INTERNATIONAL SEARCH REPORT
Information on patent family members

International Application No
PCT/EP 94/04328

Patent document cited in search report	Publication date	Patent family member(s)	Publication date
EP-A-476752	25-03-92	CA-A- 2051464	18-03-92
		DE-D- 69102377	14-07-94
		DE-T- 69102377	27-10-94
		ES-T- 2056567	01-10-94
		JP-A- 4228671	18-08-92
NL-A-289083		NONE	
DE-U-8717966	09-04-92	DE-C- 3610943	30-07-87
		EP-A,B 0239835	07-10-87
		JP-A- 62238859	19-10-87
		US-A- 4774107	27-09-88