D. E. CLARK.

SOLE FOR SHOES AND OTHER FOOTWEAR AND PROCESS OF MAKING SAME.

APPLICATION FILED SEPT. 22, 1916.

1,293,037. Patented Feb. 4, 1919.

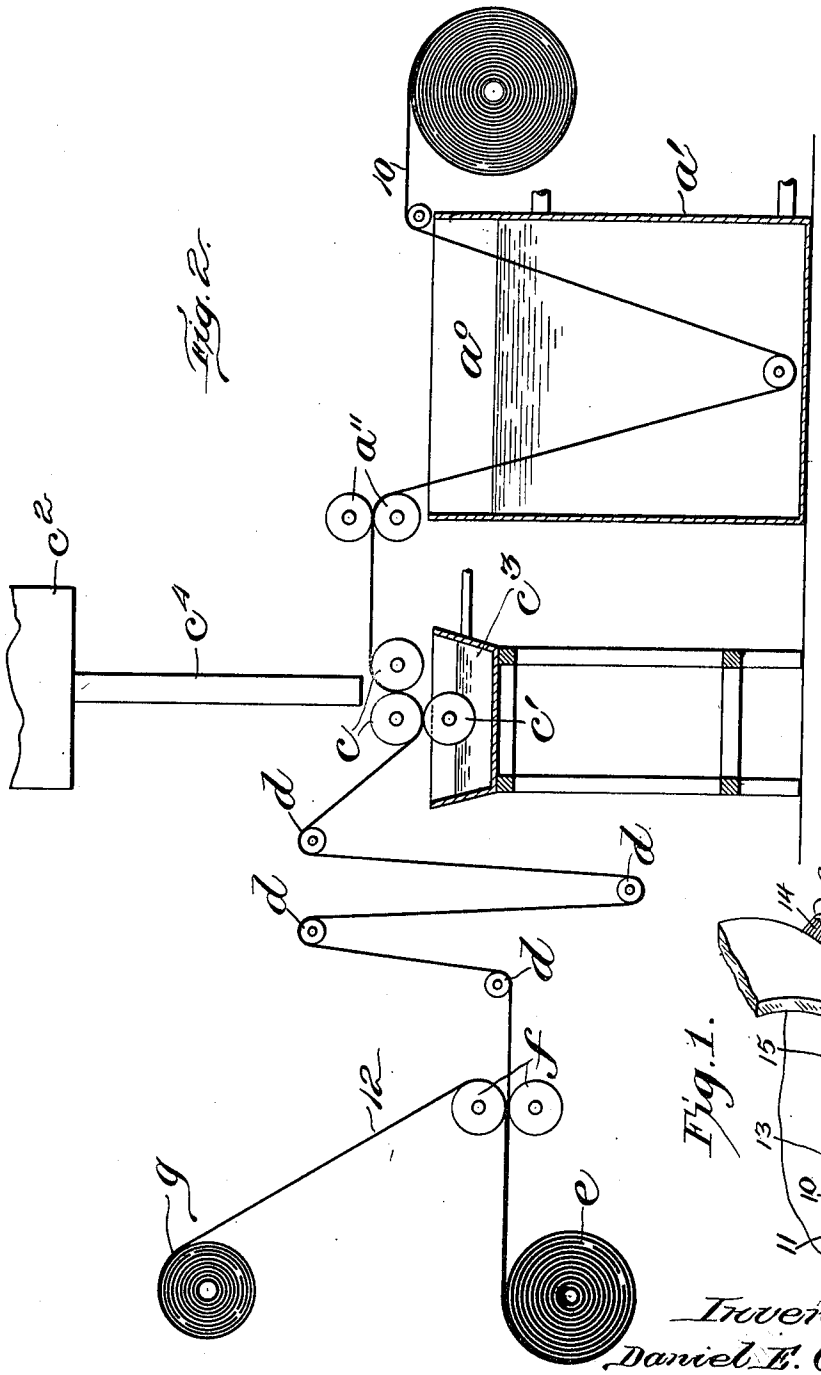

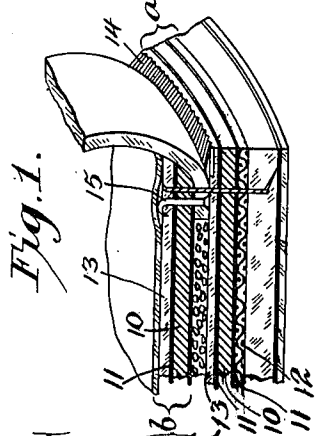

Inventor:
Daniel E. Clark,
by Mitchell, Chadwick & Kent
Attys.

UNITED STATES PATENT OFFICE.

DANIEL E. CLARK, OF BOSTON, MASSACHUSETTS, ASSIGNOR TO THE BARRETT COMPANY, OF BOSTON, MASSACHUSETTS, A CORPORATION OF MAINE.

SOLE FOR SHOES AND OTHER FOOTWEAR AND PROCESS OF MAKING SAME.

1,293,037. Specification of Letters Patent. Patented Feb. 4, 1919.

Application filed September 22, 1916. Serial No. 121,666.

To all whom it may concern:

Be it known that I, DANIEL E. CLARK, a citizen of the United States, residing at Boston, in the county of Suffolk and State of Massachusetts, have invented new and useful Improvements in Soles for Shoes and Other Footwear and Processes of Making Same of which the following is a specification.

This invention relates to improvements in soles for shoes and other foot wear, and in processes of making same. More particularly it relates to composite inner soles and taps, made of felt associated with other materials, useful for purposes for which leather taps and inner soles have heretofore commonly been used, and possessing additional advantages. It is among the objects of the invention to provide a substitute for solid leather taps and inner soles having characteristic firmness and flexibility and the advantage, as compared with solid or laminated leather, that they are thoroughly waterproof and are not injuriously affected by water. Also to provide material in which the stitch holes become sealed when used for these purposes. Also to provide a material which is readily adapted to general use in the trade, as leather is now used, in view of the machinery, methods, customs and prejudices now in vogue, although with advantages over leather in cost, in utility and in other respects.

Numerous efforts have heretofore been made to use felt successfully as a part of the sole of a shoe, but all have been unsuccessful in a commercial sense, so far as I am aware, until the present invention was developed. In its preferred form the invention comprises a layer of felt impregnated with bituminous material and having on one or both sides a bituminous coating of harder characteristics obtained by applying material having a higher melting point, and on one face a layer of canvas or other fabric, and having on the other face a layer of leather. When used either face may be exposed to view, according to the preference of the user, or according to the particular purpose for which the product is being used. When the upper is being drawn over, the fabric facing intervening between the felt and the irons which are used for the drawing prevents the iron from becoming sticky from the gum that presses out from the felt, and also prevents the formation of marks on the material by the iron. When used as a tap, leather takes the "wheeling" or marking operation after the tap has been sewn to the sole, much better than felt or cloth would do. These things render shoes more attractive to buyers. The fabric or leather also holds the tacks which are clenched under the composite sole better than felt alone can do. It also prevents certain wrinkling of the felt which naturally occurs when pressing operations are applied directly to a felt surface, especially if accomplished by heat as in ironing out the interior after the stitching has been done. When subjected to this process the product of the invention not only resists perfectly the formation of wrinkles, but it fills up automatically the stitch holes, by aid of its impregnating substances, so that the sole becomes perfectly waterproof while at the same time affording a body of requisite thickness which is soft and comfortable.

An embodiment of the invention is illustrated in the accompanying drawing in which, Figure 1 represents a section through a part of a McKay sewed shoe having the material of the invention in use as a tap and also as an inner sole, the thickness of parts being necessarily exaggerated for the sake of clearness, and Fig. 2 is a diagrammatic representation of apparatus that may be used in making the material.

In the process of manufacture of the tap or inner sole the so-called "saturating" felt, as that term is understood in the trade, may be employed. It is one advantage that this may if desired be of what would ordinarily be called of rather poor quality, the same being adequate and really good for the purposes of the invention, because the felt, in the finished shoe where it is put to the test of use, is rather closely held by being in relatively small pieces, girt about by sewing and secured to overlying layers of fabric or leather, and is further secured by aid of the intervening hard bituminous coat. This material is subjected to treatment by being run through a bath a^0, Fig. 2, of the hot bituminous liquid which is to be used for saturation. The sheet of felt 10 which has been run through the saturating bath a^0 passes next through squeezing rollers a which express excess of liquid, and then passes

through another set of squeezing rollers *c* where it receives on one side a thin deposit of hot bituminous liquid which on cooling forms a harder bituminous coating 11. Subsequently it may go through the pair of rollers *c*, *c'* where it receives a layer of similar bituminous material 11 on its other side that similarly becomes hard. Thence it passes over guide rolls *d* through a space provided for abstraction of heat from the layers by any suitable cooling method, and thence to a winding machine where it is made into a roll *e*. On the way from guide rolls *d* to roll *e* the strip may be led between rollers *f* where it is pressed together with a layer of canvas or other textile fabric 12 which is to constitute a facing for the finished product; and these may be made to adhere by means of glue if desired or if necessary. If preferred the textile fabric may be applied to the impregnated and coated strip 10 after being wound into roll *e*. The bath *o* is shown as contained within a vessel *a'* while the coating material applied by the rolls *c* and *c'* may be contained within reservoirs c^2 and c^3, a conduit c^4 delivering material from reservoir c^2 to the pair of rolls *c* for the top side layer; and the roll *c* of the pair *c*, *c'* transferring the material from reservoir c^3 for the bottom side layer. The sheet of canvas 12 may be drawn from a supply roll *g* by the movement of the strip 10 toward roll *e*. The facing of leather 13 applied to the other side, may in some cases be put on most conveniently by hand, on account of the limited lengths and breadths of sheets in which the leather is formed. This also may be held by glue. When the various parts have all been assembled, the composite sheet is preferably passed under a heavy roller, or is otherwise pressed, in order to make the whole a composite sheet of uniform thickness with its parts adhering well together. The leather facing 13 may be thin sheets of leather, such as skivings. Variations from this may be made. The leather may be put on both sides, if preferred,—or one side may be left with its hard bituminous coating exposed,—or a suitable paint may be used as a finish for an exposed side instead of the hard bituminous coating.

The completed product is in sheet form with sides parallel and is capable of treatment as are sheets of leather in the ordinary manufacture of boot and shoe materials, by being cut into different shapes with dies. Such shapes are a commodity or article of trade, known as insoles or taps. Or the large sheets may be sold uncut.

The product thus described takes its place in the market like leather. It is not a substitute for leather for all purposes, but when cut and used for the purposes suggested it does not differ materially from the leather products to which the boot and shoe trade are already accustomed either in external appearance or in handling. When combined in a shoe it has the natural advantages of leather, solid or composite, without their disadvantages. Thereby it accomplishes the double purpose of opening to the public a field of utility for bituminous products, and of diminishing the demand for leather, which has already so much over-run the supply.

When the product is finished for use as a tap, as at *a* leather skivings showing the natural surface of the leather may be used. Then, in cases where the top of the tap is exposed around the edge of a shoe a true leather surface appears on top, where the tap is exposed to vision. If the other side is leather faced the friction and the minor slipping between the tap and the outer sole is like that of leather in its characteristics, enabling the sole of the shoe to bend in the manner of leather. As the felt filling comes out to the edge, its edge and thickness are fully exposed to view, so that the consumer buying shoes can see the protection he is getting. On the upper surface of the projecting edge of tap around the shoe the customary marking or "wheeling" 14 is executed on leather. Hence the tap has the top aspect commonly seen in shoes, which cannot be obtained on a felt surface. For the sake of economy the leather facings may be very thin. The felt, being then correspondingly thicker, affords a softer and more comfortable body under the foot than is characteristic of leather. Other advantages of this construction, as compared with what the structure would be if felt alone were used, become manifest during manufacture and wear of shoes having taps and insoles embodying the invention. The leather gives a surface which aids in holding sewing, nails and tacks 15 better than felt alone would do, and which prevents a certain wrinkling of felt which occurs when pressing operations in the nature of ironing are applied directly to a felt surface. The coating of both sides of the felt with leather, or of one side with leather and one with fabric, or of both sides with fabric, provides protection which prevents bituminous matter being pressed out from the felt and gumming the irons which come against it in the processes of drawing the upper over on the last. The fabric also, intervening between the impregnated felt and the hot iron, used in ironing out the interior of the shoe after the stitching has been done, prevents the formation of wrinkles in the felt by the sliding motion of the iron thereon in the presence of heat and pressure. The elimination of this objectionable result makes felt a feasible material for use for inner soles, at at *b*, where heretofore it has not been practicable so far as I am aware.

Furthermore the softening of the bituminous impregnated material by heat, coupled with the pressure, causes it to fill the holes that have been made by the stitching and thus to render the sole entirely waterproof, thus accomplishing an end which practically all of the substitutes heretofore proposed for solid leather taps or inner soles have failed to accomplish. And this is done in a thoroughgoing way, as the capillary spaces between the hairs in the felt are absolutely filled, and the product is not injuriously or otherwise affected by water or weather, in any way, and retains at all times its combination of the qualities of flexibility and softness. A composite fabric of the type described, having leather on one side and textile fabric on the other side is especially advantageous as an article of manufacture, for either side can be used uppermost in the finished shoe. This makes a saving to the manufacturer of the shoe in that it combines in one form the desirability of both forms, and in that it economizes cost of storage and of investment in stock.

In suitable places the leather or fabric covering may be omitted where the advantages which it contributes are not needed. Thus at *b* the fabric is omitted.

The harder bituminous layer 11, formed by applying material having a higher melting point, becomes by virtue of homogeneity of character and the heat with which its application is accompanied, firmly united with the bituminous material which lies at the surface of the impregnated felt sheet, and which also extends continuously through the capillary spaces of the body of felt. This makes a relatively firm connection of the harder bituminous material with the interior, and yet a smooth surface is presented exteriorly to which the fabric or leather can be attached. A coating of other material such as paint might be applied if desired; but I consider the hard bituminous material preferable because of its homogeneity with the body of material which extends into the felt. In case only one side of the felt is faced with leather or fabric, as at *b*, the other side may be finished either with said layer of bituminous material having a higher melting pointfi or with paint, thus giving a smooth and dry surface for the material so long as any surface is exposed to handling prior to its incorporation in the shoe. This paint or other coating for the surface also helps make the felt somewhat more rigid, and protects the saturation. In some cases even the leather or fabric can be dispensed with and reliance placed on the hard coating of bituminous material or paint.

The product of the above described process when embodied in shoes has the advantage, as compared with other materials heretofore used for footwear, that the wearer's feet are insulated against both heat and cold, water and electricity, and the material does not draw the feet as does rubber. That which is responsible particularly for these advantages is the felt layer impregnated with bituminous material which is joined at both surfaces with a coating of other bituminous material, paint, or the like, rendering it yet more resistant to water and giving a degree of rigidity additional to that which is characteristic of the felt alone, and thus making the material more suitable for use in taps of shoes and the like. As it is handled in flat sheet form it is readily adaptable to cutting to all sizes like leather. In the claims the term "sole" is used as including both inner soles and taps; and the term "shoes" is considered to include similar footwear.

I claim as my invention:

1. A composite material adapted for shoe soles comprising a sheet of felt impregnated with bituminous material and a facing of thin leather adhering thereto, the whole constituting a flexible sheet of substantially uniform thickness.

2. A composite material adapted for shoe soles comprising a sheet of felt impregnated with bituminous material and a facing of thin leather and one of textile fabric on opposite sides thereof and adhering thereto, the whole constituting a flexible sheet of substantially uniform thickness.

3. A composite material adapted for shoe soles comprising a sheet of felt impregnated with bituminous material and coated with similar material having a higher melting point and with a facing of thin leather adhering thereto, the whole constituting a flexible sheet of substantially uniform thickness.

4. A composite material adapted for shoe soles comprising a sheet of felt impregnated with bituminous material and coated with similar material having a higher melting point and with a facing of flexible fabric adhering thereto, the whole constituting a flexible sheet of substantially uniform thickness.

5. A composite material adapted for shoe soles comprising a sheet of felt impregnated with bituminous material and coated with similar material having a higher melting point and with a facing of thin leather and one of textile fabric on opposite sides thereof and adhering thereto, the whole constituting a flexible sheet of substantially uniform thickness.

6. A process in the manufacture of sheet material for shoes comprising the impregnation of a sheet of felt with bituminous material, the facing thereof with thin leather while in sheet form and the cutting thereof thereafter into separate soles.

7. A process in the manufacture of sheet

material for shoes including the impregnating of a sheet of felt with bituminous material, subsequently squeezing the impregnated sheet thereby separating surplus bituminous material therefrom, coating its surface with a bituminous material of higher melting point under pressure, and subsequently cutting the sheet into individual soles.

8. A process in the manufacture of sheet material for shoes including the impregnating of a sheet of felt with bituminous material, subsequently separating surplus bituminous material therefrom, coating its surface with a bituminous material of higher melting point under pressure, facing the composite sheet with thin leather, and subsequently cutting the sheets into individual soles.

9. A composite sheet material for inner soles for shoes including parallel sheets, each of uniform thickness, said sheets being respectively of felt impregnated with bituminous material, of harder bituminous material, and of leather, all adhering together.

10. A composite sheet material for soles for shoes including parallel sheets, each of uniform thickness, said sheets being respectively of felt impregnated with bituminous material, of protective film therefor, and of finish facing, all adhering together.

11. A composite sheet material for soles for shoes including parallel sheets, each of uniform thickness, said sheets being respectively of felt impregnated with bituminous material, too soft and flexible to constitute durable wearing material, and of harder and stiffer protective material, all adhering together.

Signed by me at Boston, Mass., this 16th day of September, 1916.

DANIEL E. CLARK.

Witnesses:

JOSEPH T. BRENNAN,

MARION E. GRACE.