Dec. 2, 1930. A. W. JOHNSON 1,783,620

WIRE CUTTING MECHANISM

Filed March 30, 1929 2 Sheets-Sheet 1

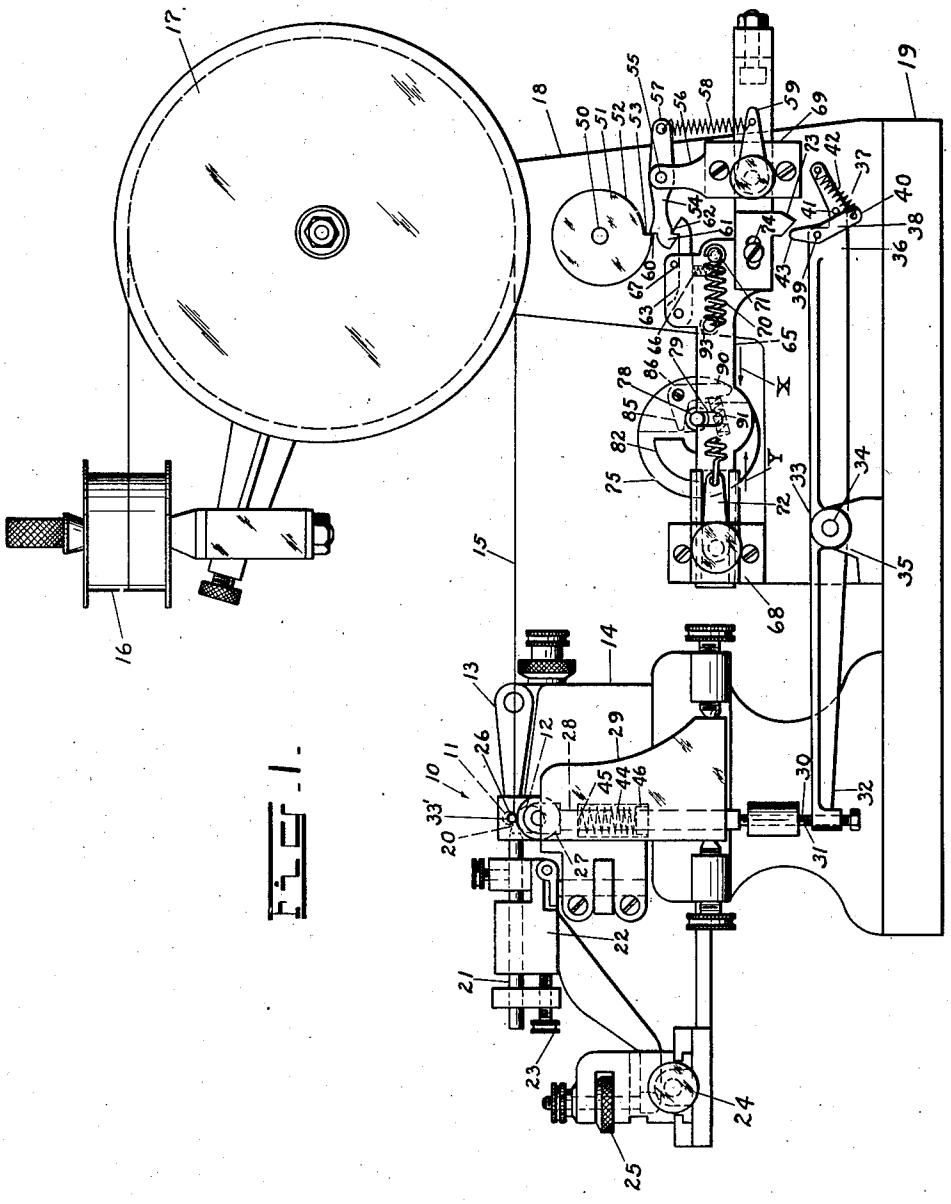

FIG. 1.

INVENTOR
A. W. JOHNSON
BY M. F. Reyes
ATTORNEY

Dec. 2, 1930. A. W. JOHNSON 1,783,620

WIRE CUTTING MECHANISM

Filed March 30, 1929 2 Sheets-Sheet 2

Fig. 2.

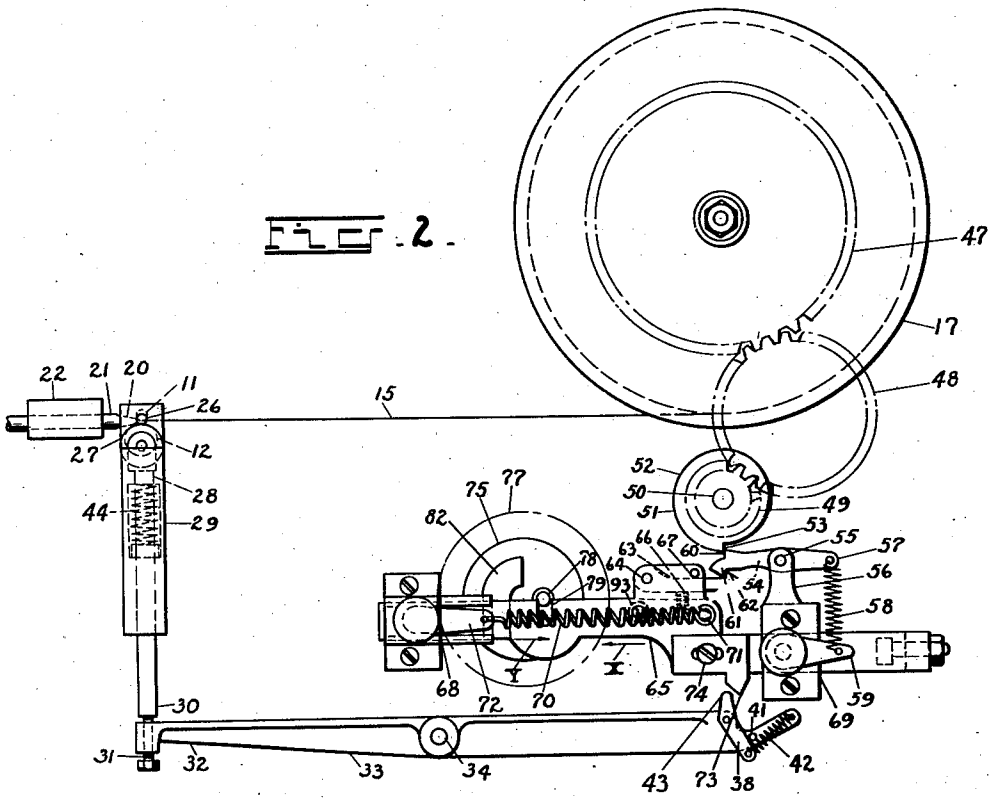

Fig. 4.

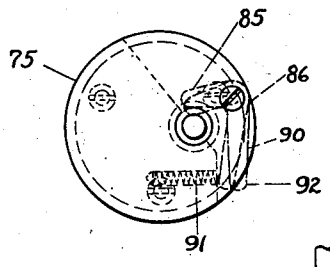

Fig. 3.

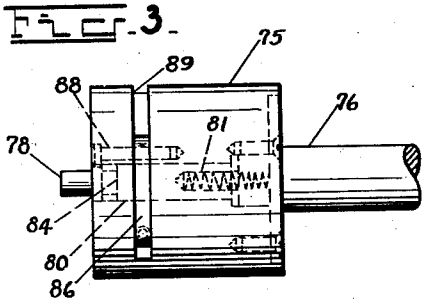

Fig. 5.

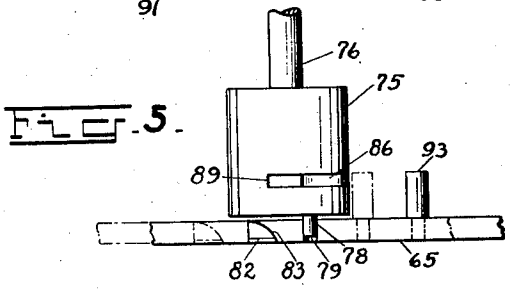

INVENTOR
A. W. JOHNSON
BY M. F. Regeo
ATTORNEY

Patented Dec. 2, 1930 1,783,620

UNITED STATES PATENT OFFICE

ALLAN WILLIAM JOHNSON, OF NEWARK, NEW JERSEY, ASSIGNOR TO WESTINGHOUSE LAMP COMPANY, A CORPORATION OF PENNSYLVANIA

WIRE-CUTTING MECHANISM

Application filed March 30, 1929. Serial No. 351,394.

This invention relates to a machine for measuring and cutting an indefinite length of wire and relates more particularly to a machine for cutting a length of coiled filament wire into relatively short sections of uniform length.

Although the invention may have various uses, it is shown and described herein in connection with what is termed, a mandrelless coil winding machine. A machine of the above type, is shown in Patent No. 1,670,499 and copending application, Serial No. 142,823 filed October 20, 1926 and assigned to the present assignee.

In a mandrelless coil winding machine a fine filamentary wire is fed from a spool over a measuring reel or drum, thence between a pair of driving or force rollers and into a cavity die which diverts the wire into helical form so that the wire issues from the cavity in a continuous helical coil. As this coil issues from the die it is automatically severed into uniform sections or short lengths, each of which constitutes a light source for an incandescent lamp of given wattage. In cutting the said sections it is important that each coiled section contain the same amount of filament wire, that is, the length of wire contained in the coil must be maintained uniform since, if any variations exist, the rating of the lamp cannot be maintained.

In the above mentioned patent, means are provided whereby a measuring drum is actuated so that after the drum has moved a given distance circumferentially, cutting mechanism is actuated to sever a section containing a length of wire determined by the movement of the drum. In order to accomplish this cutting operation it has heretofore been necessary to provide the drum with means co-acting directly with the cutting means for the translation of force to the latter to perform the severing operation.

Although this machine operated satisfactorily to sever lengths of filament wire it has been found that by reason of the extreme fineness of the wire and since it is necessary to impart a tensional stress in the wire to actuate the measuring drum, certain disadvantages result. For example, when winding coils from the hair-like tungsten wire as employed, in say, a 10 watt lamp, any tensional stress upon the wire may cause the same to stretch; particularly if the wire contains portions varying in their properties, such for example, as a wire having soft and hard spots. In this case any stretching would reduce the cross sectional area of the wire, which when subsequently formed into a lamp filament, produced hot spots by reason of the increased resistance at the attenuated portions.

It is an object of the present invention, therefore, to provide mechanism operable in cooperation with the measuring drum to permit the same to actuate cutter mechanism in the absence of detrimental stresses upon the filament wire.

Another object of the invention is to provide means for storing energy and means cooperative with a measuring drum to release said energy for the actuation of cutter members.

Other objects and advantages of the invention will be more fully understood by reference to the accompanying drawing in which,

Fig. 1 is a side elevational view of a mandrelless coil winding machine having the present invention applied thereto.

Fig. 2 is a diagrammatic or skeleton drawing showing the present coil cutting mechanism and its relation to coil winding machine.

Fig. 3 is a side detail view of trigger setting mechanism.

Fig. 4 is an end view of the mechanism shown in Fig. 3, and

Fig. 5 is a top view of the trigger setter member shown in Fig. 3 in operative relation to a trigger.

As a practical example of one embodiment of the invention the same is shown applied to a mandrelless coil winding machine 10 comprising a pair of force rollers 11 and 12, the roller 11 being mounted in a bearing plate 13 and the lower roller being mounted in suitable bearings on a framework 14 of the machine. The rollers 11 and

12 are driven in opposite directions by suitable means (not shown) and frictionally engage a filament wire 15 which is drawn from a spool 16 after passing in a bight around a measuring roller 17 which is mounted on a bracket 18 projecting from a bed plate 19. As the wire passes between the rollers 11 and 12 it enters a cavity (not shown) at the end 20 of a die rod 21. The said die rod is suitably mounted in a holder 22 being adjustable endwise by means of set screw 23 and having other adjustments such as sidewise and vertical adjustments through the agencies of set screws 24 and 25.

No further description of the coil winding machine is thought to be necessary since the mechanism may be the same as that shown in the above mentioned patent.

After the wire passes into the cavity at the end 20 of the die rod it passes through a tubular guide 26 at the end of which is disposed a cutter 27 mounted on a plunger 28 reciprocal vertically in a guide plate 29. The lower end 30 of the plunger is disposed in contact with a set screw 31 at one end 32 of a lever member 33 pivoted at 34 in a bearing 35.

The opposite end 36 of the lever is provided with a latch 37. This latch consists of a rocker member 38 pivoted at 39 and having an arm 40 normally held against a stop 41 by a spring 42; thus an engagement with one side of an arm 43 of the rocker member 38 will serve to depress the arm 36 by reason of the stop 41 and rock the lever 33 while an engagement of the opposite side of the arm 43 will permit the rocker member to move without actuating the lever 33.

It will therefore be evident that by engaging the rocker arm 38 the lever 33 may be actuated to lift the plunger 28 and cause the knife 27 to sever a coil. The knife 27 moves across the orifice at the end of the tube 26, the edge of which serves as a bed knife 33'. A spring 44 disposed between the shoulder 45 and a collar 46 on the plunger operates to normally return the plunger to its lowered position. It will be appreciated that the present cutter must sever the coil as it moves from the coil winding die, therefore, the action of the cutter must be positive and instantaneous.

In order to obtain the desired quick shearing action the lever 33 must be moved in a rapid and positive manner. Heretofore this was accomplished by providing a lever member actuated by a cam on the measuring drum. The lever which actuated the cutter in conjunction with the cam frictionally engaged the cam so that in order to rotate the drum considerable stress had heretofore been imparted in the filament wire.

In the present construction the measuring drum 17 is provided with a gear wheel 47 (see Fig. 2) in mesh with a change gear or idler 48 which is disposed in mesh with a gear 49 secured to a shaft 50. The shaft 50 is provided with a cam member 51 having a cam surface 52 and a drop portion 53. The said cam engages a trigger member 54 journaled at 55 in a bearing 56.

One end 57 of the trigger is connected by a spring 58 to a projection 59, the spring 58 operates to hold a lug 60 at the opposite end of the trigger member normally engaged with the cam surface 52. On the trigger member, opposite to the lug 60 is provided a lug 61 engageable with a lug 62 at the free end of a latch-piece 63, the latch-piece being pivoted at 64 on a slide plate 65. A spring 66 is provided to normally urge the latch-piece against a stop 67 so as to be in position to engage the lug 61 of the trigger 54.

The latch-piece 63 is mounted on and is movable with the plate 65 which is slidable in guides 68 and 69. It will be understood that the trigger 54 which is mounted on a bearing 56 integrally with the guide 69 is stationary, the said guide being secured to the bracket 18. A spring 70 secured to a pin 71 projecting from the slide plate and a tongue 72 secured to the guide 68 normally urges the plate in the direction of the arrow "X" so that when the plate is free to move an impact member 73 adjustably secured by set screw 74 to the plate 65 will engage the end 43 of the rocker member 38 and actuate the lever 33 to operate the cutter. The tongue 72 is stationary being secured to guide 68 suitably secured to the foot of bracket 18.

Means are provided to extend or stretch the spring 70 at which time the trigger 54 engages the latch-piece 63 and holds the slide plate in operative position so that when the trigger 54 is released the potential energy of the spring will cause the impact member 73 to actuate the lever 33. The above mentioned means for actuating the slide plate 65 so as to expand the spring may comprise mechanism in the form of a rotatable head 75 constituting what may be termed, trigger setting mechanism.

The head 75 is mounted on a shaft 76 and is continuously driven by a gear wheel 77 suitably connected with a motor (not shown) which drives the other operating elements of the machine, as for example, the force rollers 11 and 12 which drive the wire into the coil winding die. The head 75 is provided with a projecting pin 78 disposed eccentric to the axis of rotation of the head. The pin is so arranged as to enter a notch 79 in the slide plate 65, thus as the pin rotates with the head the slide plate will be carried in the direction of the arrow "Y" so as to expand the spring and permit the trigger member

54 to engage the latch-piece 63 and hold the plate ready for actuation.

It is necessary, however, to provide means for retracting the pin from its operative path after it leaves the notch 79 and for holding the same retracted to permit a number of revolutions of the head 75.

This is accomplished by making the pin slidable in an aperture 80 in the head and providing a spring 81 for normally urging the pin outwardly and by having a cam face 82 extending from the slide plate 65 in the path of rotation of the pin 78 so that as the pin leaves the notch 79 it will engage a bevel face 83 of the cam and move inwardly until an annular notch 84 on the pin is engaged by one arm 85 of a bell crank member 86 pivoted on a pin 88 in a slot 89 in the head. An opposite arm 90 of the bell crank member is disposed in tensional relation with a spring 91 so that when the arm 85 drops into the notch 84 of the pin, the arm 90 will slightly project from the slot 89 at the head thus leaving an end 92 of the arm exposed for engagement with a contact pin 93 which projects from the slide plate 65.

The pin 93 is so positioned that when the slide plate is advanced, that is, when the spring 70 is expanded the said pin will be removed from the path of movement of the projection 92, but after the spring 70 is contracted and the slide plate has returned, the pin 93 will engage the projection 92 causing the bell crank member to be actuated and the arm 85 lifted from the notch 84. Whereupon the spring 81 will be free to act and project the pin 78 so that the same will again enter the notch 79 and repeat the operation of moving the slide plate 65 and expanding the spring.

It will be understood that by reason of the present mechanism the filament wire 15 may be moved to rotate the drum 17 with a minimum amount of tension. As the drum rotates the gear wheel 48 transmits motion to the cam 52 and the cam 52 is thus rotated to actuate the trigger 54. As shown in Fig. 2 the trigger 54 is in position just about to drop and release the latch-piece 63. When this occurs the slide plate 65 will under the action of the spring 70, be pulled in the direction of the arrow "X" causing the impact member 73 to engage the arm 43 causing an actuation of the lever 33 which results in an operation of the cutter to sever a coiled section.

The plate 65 will then be in its retracted position and the contact pin 93 will be in position to engage the projection end 92 of the bell crank member 86 to permit the pin 78 to be projected so that upon a rotation of the head 75, the pin will enter the notch 79 and return the slide plate 65 to an operative position. As the slide plate 65 returns, the impact member 73 will pass the arm 43 since the latter is free to move in one direction. As the plate 65 reaches its final returned position the latch 63 will again engage the trigger 54 to hold the cutter in operation while the cam 52 rotates.

By reason of the present construction a section of coiled wire is severed upon each rotation of the cam 52 and inasmuch as the action occurs instantaneous, the cam continues to rotate and the driving mechanism of the machine has ample time to set the trigger before the drop portion of the cam returns for another coil cutting operation.

It will also be understood that by changing the idler gear 48 the cutter may be operated to cut coiled sections of different lengths, since the length of coil cut is determined by the gear ratio of the gear train 47, 48 and 49.

By reason of the present invention the tension on the filament wire during winding is reduced to a minimum which makes it possible to avoid detrimental stretching of the wire and variations due to the wire slipping as when given considerable tension for the purpose of severing coils as heretofore accomplished.

Although a preferred embodiment of the invention is shown and described herein it is to be understood that modifications may be made therein without departing from the spirit and scope as set forth in the appended claims.

What is claimed is:

1. In combination with a wire coiling machine having means for moving a wire, a measuring drum movable through frictional engagement with said wire, wire cutting mechanism, means independent of said drum for storing energy to actuate said cutting mechanism and means cooperating with said drum for releasing said energy to actuate said cutting mechanism.

2. A coil winding machine comprising a wire coiling element, means for moving a wire toward said element, a rotatable member frictionally engaged by said wire and rotatable upon a movement of said wire, coil cutting mechanism, means independent of said rotatable member for storing energy to actuate said mechanism and means for releasing said energy upon a predetermined movement of said member.

3. A coil winding machine comprising a wire coiling element, means for moving a wire toward said element, a movable member frictionally engaged by said wire, coil cutting mechanism, means independent of said movable member for storing energy for actuating said mechanism and means for releasing said energy upon a predetermined movement of said member.

4. Wire cutting mechanism comprising, means for moving a wire, a measuring element controlled by the movement of said wire, a wire shearing element, a continuously

driven member for storing energy to actuate said element and means for releasing said energy to sever said wire.

5. Wire cutting mechanism comprising means for moving a wire, a measuring element controlled by the movement of said wire, a wire shearing element, a continuously driven member for storing energy to actuate said shearing element and means controlled by said measuring element for releasing said energy to actuate said shearing element.

6. A wire cutting mechanism comprising means for moving a wire, a movable element controlled by the movement of said wire shearing mechanism, a rotatable member, means for driving said member to store energy for actuating said shearing mechanism, and means cooperating with said movable element for effecting a release of said energy to actuate said shearing mechanism.

7. A wire cutting mechanism comprising means for moving a wire, a drum movable through frictional engagement with said wire, a movable cutter element, a lever member for actuating said element, means independent of said drum for storing energy to actuate said lever member and means cooperating with said drum for releasing said energy.

8. A wire cutting mechanism comprising, means for moving a wire through a given path, a rotatable element movable through frictional engagement with said wire, a wire cutting member, a slide plate for actuating said member, a tension element for actuating said plate, means for creating internal energy in said tension member and means for releasing said energy to cause an actuation of said slide plate.

9. A wire cutting mechanism comprising means for moving a wire through a given path, a rotatable element movable through frictional engagement with said wire, a wire cutting member, a slide plate for actuating said member, means for storing potential energy to actuate said slide plate, a trigger member for holding said silde plate inoperative under said energy and means cooperating with said movable element for actuating said trigger to release said plate.

10. A wire cutting machine comprising means for moving a wire through a given path, a rotatable element movable through frictional contact with said wire, a spring, means independent of said rotatable element for expanding said spring, a wire cutting member operable upon a contraction of said spring and means cooperating with said movable member for effecting a contraction of said spring to actuate said cutting member.

11. A device for cutting a wire comprising means for supporting a wire, a wire cutting element operable upon the release of stored energy a continuously rotatable member for storing energy and means for releasing said energy to actuate said cutting element.

12. A device for cutting a wire comprising means for supporting a wire, a bed knife, a movable knife, a continuously driven head for storing energy for actuating said movable knife and means for releasing said energy to cause said knife to sever said wire.

In testimony whereof, I have hereunto subscribed my name this 16 day of March, 1929.

ALLAN W. JOHNSON.