(No Model.) 2 Sheets—Sheet 1.

C. K. ROGERS.

DEVICE FOR OPERATING HATCHWAY DOORS.

No. 456,063. Patented July 14, 1891.

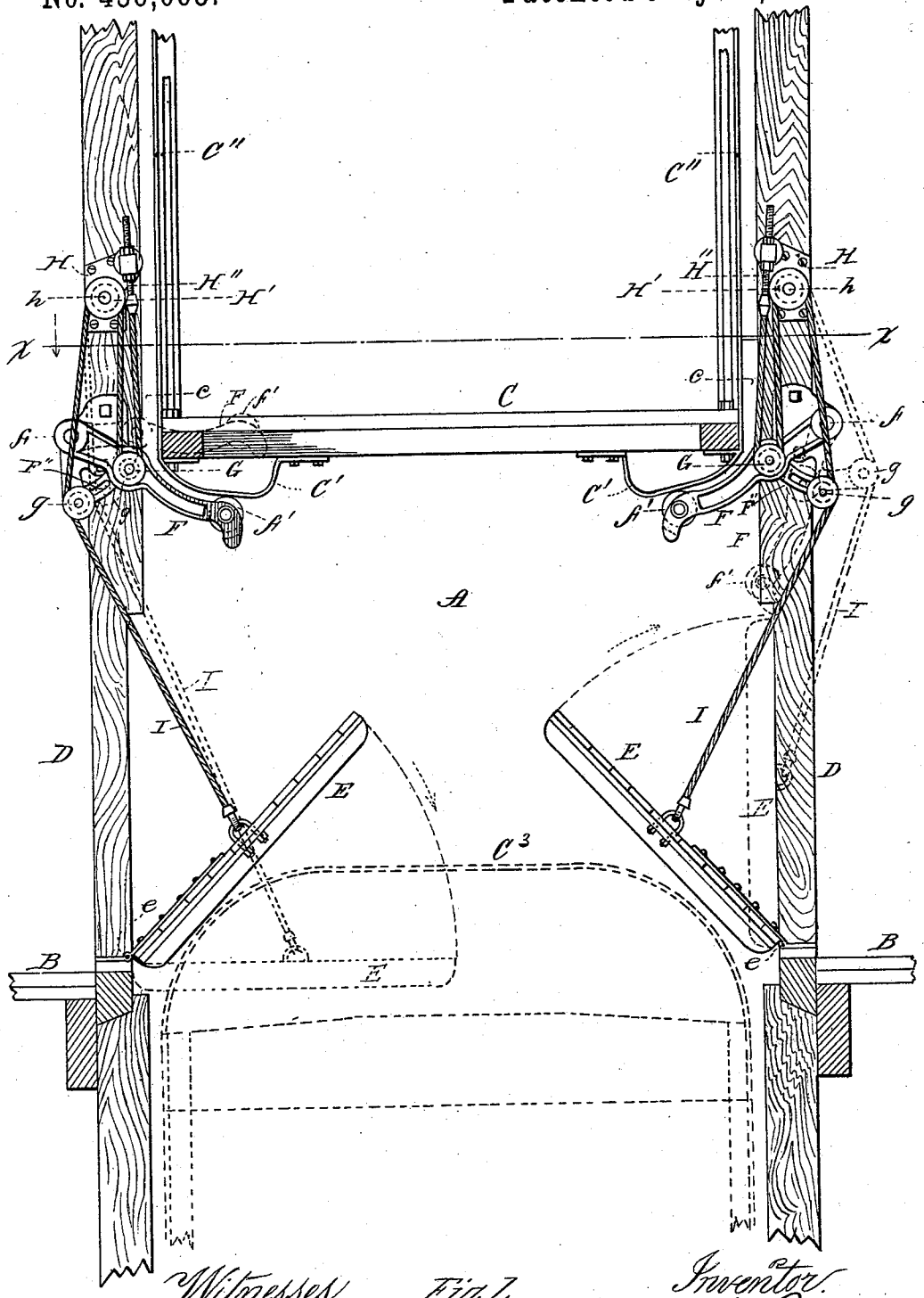

Fig. 1.

Witnesses.
Alice A. Perkins.
Geo. C. White.

Inventor.
Columbus K. Rogers.
by Munn & Andrew. his atts.

THE NORRIS PETERS CO., PHOTO-LITHO., WASHINGTON, D. C.

(No Model.) 2 Sheets—Sheet 2.

C. K. ROGERS.

DEVICE FOR OPERATING HATCHWAY DOORS.

No. 456,063. Patented July 14, 1891.

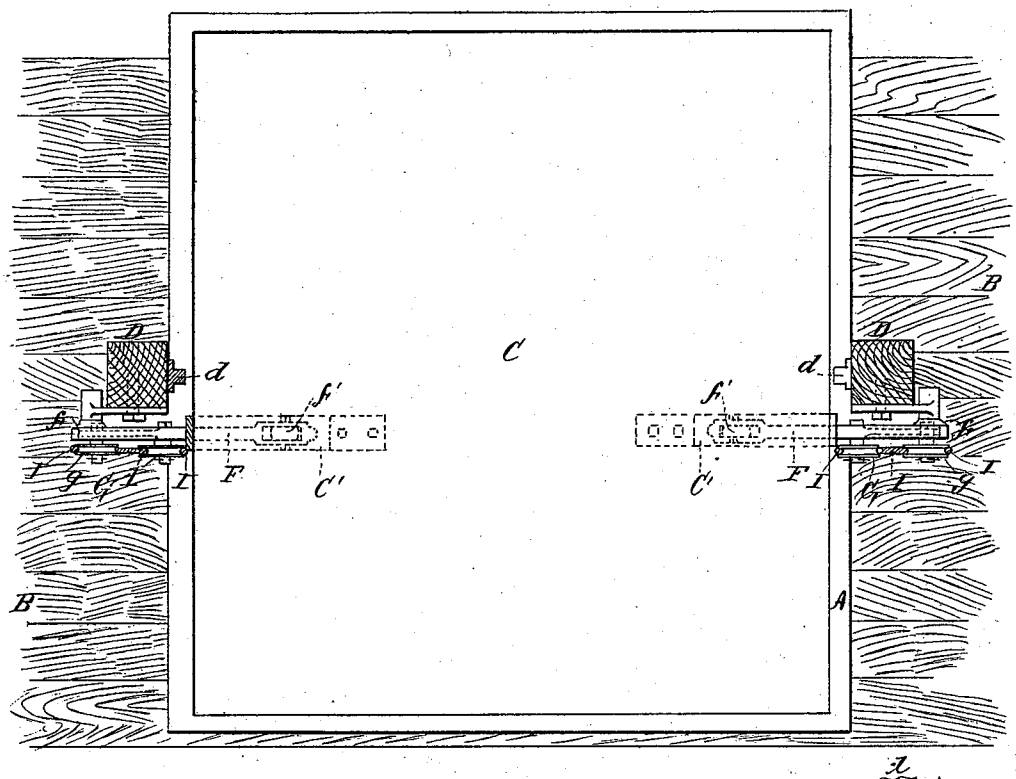

Fig. 2.

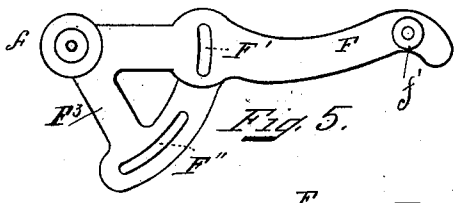

Fig. 5.

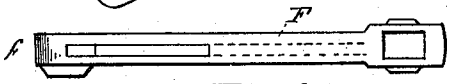

Fig. 6.

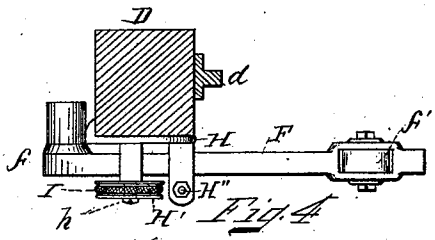

Fig. 4.

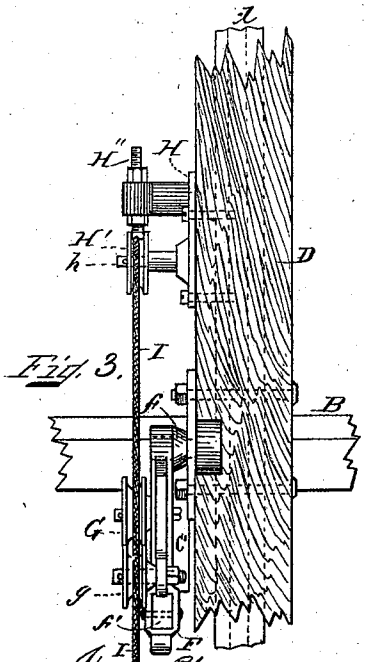

Fig. 3.

Witnesses.
Alice A Perkins.
Geo. W. White

Inventor
Columbus K. Rogers
by Wm. Andrews his atty

THE NORRIS PETERS CO., PHOTO-LITHO., WASHINGTON, D. C.

UNITED STATES PATENT OFFICE.

COLUMBUS K. ROGERS, OF SALEM, MASSACHUSETTS, ASSIGNOR TO CHARLES F. CURWEN, OF SAME PLACE.

DEVICE FOR OPERATING HATCHWAY-DOORS.

SPECIFICATION forming part of Letters Patent No. 456,063, dated July 14, 1891.

Application filed February 11, 1891. Serial No. 381,027. (No model.)

To all whom it may concern:

Be it known that I, COLUMBUS K. ROGERS, a citizen of the United States, and a resident of Salem, in the county of Essex and State of Massachusetts, have invented new and useful Improvements in Self-Closing Hatches, of which the following, taken in connection with the accompanying drawings, is a specification.

This invention relates to improvements in self-closing hatches for elevator-wells and mechanism for automatically opening and closing the same by the motion of the car, as will hereinafter be more fully shown and described, reference being had to the accompanying drawings, wherein—

Figure 1 represents a side elevation of the invention, showing the hatches partially open. Fig. 2 represents a cross-section on the line X X, shown in Fig. 1. Fig. 3 represents an end elevation, and Fig. 4 represents a detail plan view, of the automatic mechanism for opening the hatches. Fig. 5 represents a side elevation of one of the pivoted levers forming part of the automatic mechanism, and Fig. 6 represents a bottom plan view of the same.

Similar letters refer to similar parts wherever they occur on the different parts of the drawings.

A in Figs. 1 and 2 represents an elevator-well, as usual.

B represents one of the floors in the building through which the well passes.

C is the car, which is raised and lowered by means of a hoisting-rope or any other well-known device or mechanism.

D D represent the vertical well-posts on which the car is guided during its up and down movement in the usual manner, such posts having preferably secured to their inner sides the vertical bars *d d*, adapted to receive the shoes *c*, which are secured on the car C, for the purpose of properly guiding the latter during its vertical motion.

E E represent the hatches hinged in their outer edges at *e e*, as usual.

To the bottom of the car C are secured the cams or inclines C′, and to two opposite sides of the car are secured the metal straps C″, which extend upward above the car in the form of an arch or bail C^3. (Shown in dotted lines in Fig. 1.)

To each post D is secured a lever F, having the branching arm F^3 and pivoted to the said post at *f*, and having journaled at its inner end an anti-friction roller *f′*, adapted to be actuated by the cam or incline C′ during the descent of the car. On studs or pins secured to the lever F and its branching arm F^3 are loosely journaled the sheaves or cord-pulleys G and *g*, as shown in Figs. 1, 2, and 3. Above the lever F is secured to the post D a bearing plate or bracket H, having a stud or pin *h*, on which is loosely journaled the sheave or cord-pulley H′, and to said bracket H is adjustably secured the turn-buckle or adjustable tension device H″, (shown in Figs. 1 and 3,) by which one end of the hatch-rope I is connected to the well-posts, while the other end of said rope is secured to the hatch E, as shown in Fig. 1. The said hatch-rope I is preferably made of twisted metal wires; but it may be made of any other suitable or well known material without departing from the essence of my invention. The hatch-rope I is guided over the sheaves or rollers *g*, H′, and G in a manner as fully shown in Figs. 1 and 3. The inner end of the lever F is preferably weighted, so that it will automatically be caused to swing or drop to the position shown in dotted lines in the right hand of Fig. 1, when the weight of the hatch is relieved from the rope I.

The studs of the sheaves or rollers G *g* are preferably adjustably secured in slotted perforations F′ F″ (shown in detail in Fig. 5) for the purpose of adjusting the respective positions of the said sheaves relative to the width of the hatches for which the device is to be used. During the normal closed positions of the hatches E the levers F are automatically swung by means of the connecting-ropes I to the horizontal (or nearly so) position, as fully shown in dotted lines in the left hand of Fig. 1.

The operation of the device is as follows: During the downward motion of the car C and before it reaches the hatches E the cams or inclines C′ come in contact with the rollers *f′* at the inner ends of the pivoted levers

F, causing the said levers F to be swung to the vertical (or nearly so) position shown in dotted lines in the right hand of Fig. 1, and during such movement of said levers F the hatches E are automatically swung to the vertical positions shown in the right hand of Fig. 1 by the ropes I being tightened by the pulleys G *g* and the idler H′, and remain in such position until the upper end of the car passes by the said hatches, which are then caused by their own gravity to swing to their closed positions, causing during such closing movement the levers F to be returned to their normal positions, all as shown in dotted lines in the left hand of Fig. 1.

During the upward motion of the car the arch or bail C^3 comes in contact with the under sides of the hatches E, and causes them to be swung into vertical open positions, by which the strain or tension on the ropes I is relieved, allowing the weighted levers F by their own gravity to assume the vertical (or nearly so) positions, as shown in the right hand of Fig. 1, so as to allow the car to pass freely by such levers during the upward movement of the car, and as the cam C′ passes by the inner end of the lever F it automatically allows the latter to gradually assume its normal position, allowing the hatch to be closed quietly without a shock.

Having thus fully described the nature, construction, and operation of my invention, I wish to secure by Letters Patent, and claim—

1. The combination of the guide-posts provided with sheaves, the elevator-car having the cams or inclines, the hatchway-doors, the operating-levers pivoted to the guide-posts and having the branching arms and the sheaves thereon, and the hatch-door-operating ropes connected at one end with the guide-posts above the levers, passing down over the sheaves on the levers, thence up over the sheaves on the guide-posts, and thence down over the sheaves on the branching arms to the hatch-doors, substantially as described.

2. The combination of the guide-posts provided with sheaves and adjustable tension devices, the elevator-car having the cams or inclines, the hatchway-doors, the operating-levers pivoted to the guide-posts and having the branching arms and the sheaves thereon, and the hatch-door-operating ropes connected at one end to the adjustable tension devices above the levers, passing down over the sheaves on the levers, thence up over the sheaves on the guide-posts, and thence down over the sheaves on the branching arms to the hatch-doors, substantially as described.

In testimony whereof I have signed my name to this specification, in the presence of two subscribing witnesses, on this 21st day of January, A. D. 1891.

COLUMBUS K. ROGERS.

Witnesses:
ALBAN ANDRÉN,
THEKLA ANDRÉN.