Aug. 21, 1928. 1,681,723

A. R. CLAS

MOTION PICTURE APPARATUS

Filed Nov. 3, 1924 2 Sheets-Sheet 1

Fig 1

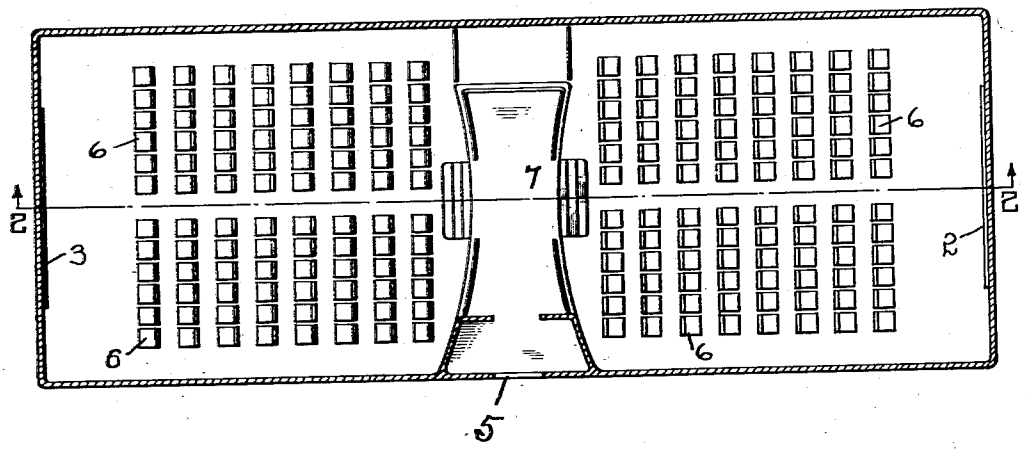

Fig 2

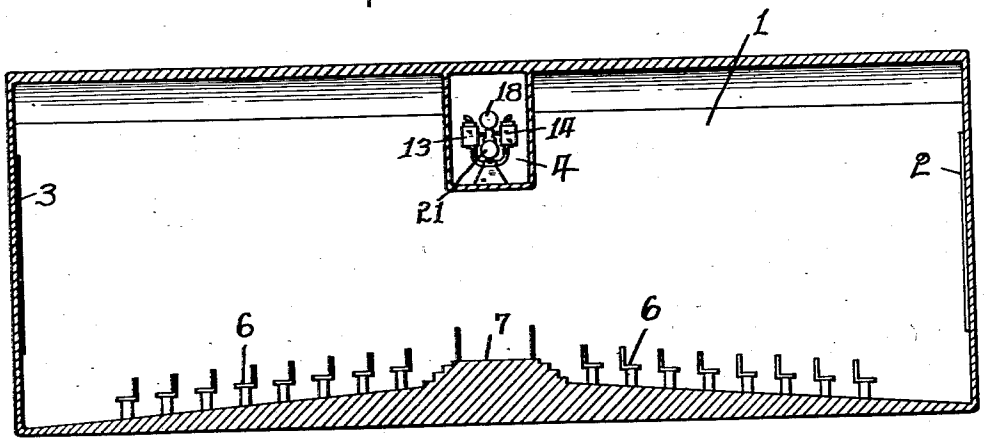

Inventor

Angelo Robert Clas.

By Owen Owen & Crampton,

Attorneys

Aug. 21, 1928. 1,681,723

A. R. CLAS

MOTION PICTURE APPARATUS

Filed Nov. 3, 1924 2 Sheets-Sheet 2

Fig 3

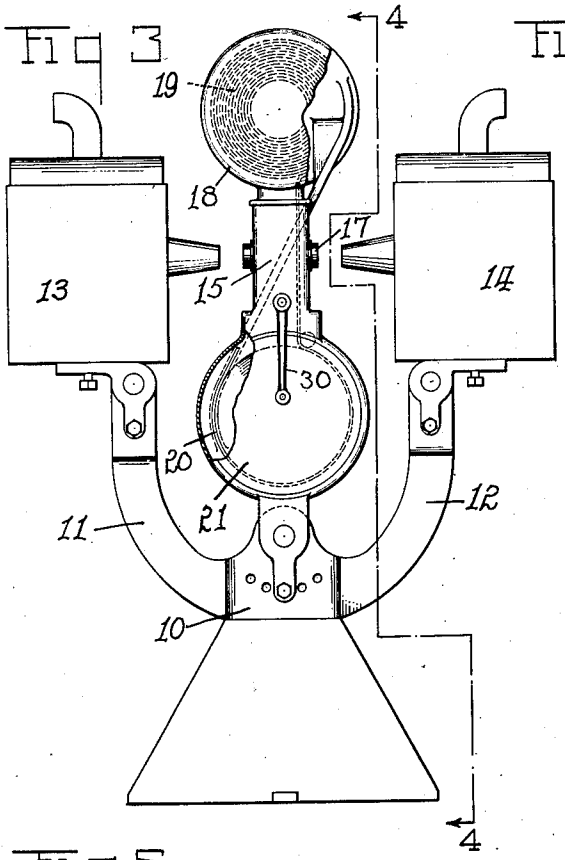

Fig 4

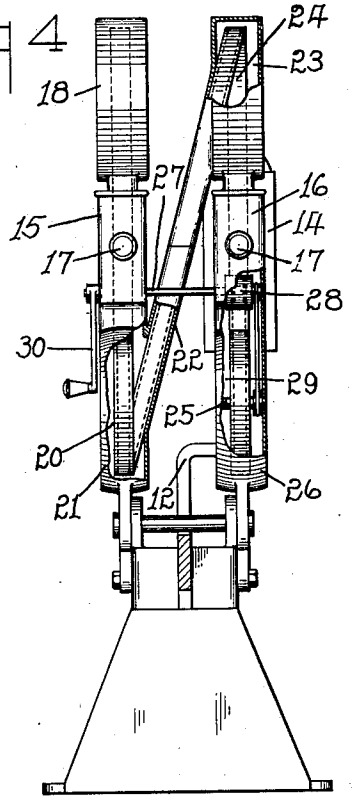

Fig 5

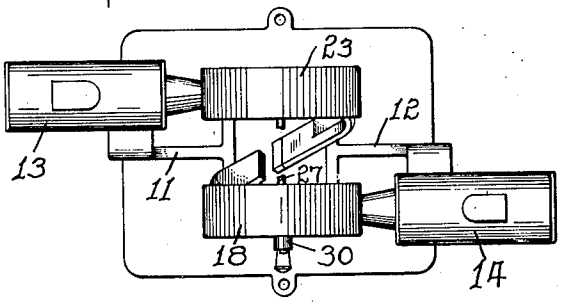

Fig 6

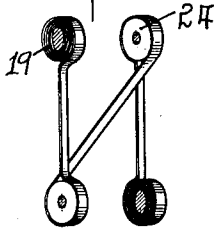

Inventor

Angelo Robert Clas.

By Owen Owen & Crampton.

Attorneys.

Patented Aug. 21, 1928. 1,681,723

UNITED STATES PATENT OFFICE.

ANGELO ROBERT CLAS, OF TOLEDO, OHIO.

MOTION-PICTURE APPARATUS.

Application filed November 3, 1924. Serial No. 747,409.

This invention relates to motion picture display means, and has primarily for its object the provision of a means of this character whereby, with the use of a single film, pictures may be projected on different screens located at points to be advantageously viewed from different parts of the threatre or room in which the pictures are displayed.

The invention is fully described in the following specification, and while in its broader aspect it is capable of embodiment in numerous forms, a preferred embodiment thereof is illustrated in the accompanying drawings, in which,—

Figure 1 is a horizontal section of a motion picture auditorium showing the floor plan. Fig. 2 is a vertical longitudinal section on the line 2—2 in Fig. 1. Fig. 3 is an elevation of an apparatus adapted to project pictures in opposite directions from a single film and having parts broken away. Fig. 4 is a different elevation thereof with parts broken away. Fig. 5 is a top plan view thereof with a part broken away, and Fig. 6 is a view illustrating diagrammatically the course of movement of a film through the machine from one roll to another and around interposed idler rolls.

Referring to Figs. 1 and 2, 1 designates an auditorium having a screen 2 at one end, and a screen 3 at the opposite end, and provided in the upper portion thereof substantially centrally between the two screens with a room or loft 4 in which the picture projecting apparatus is located. The picture projecting apparatus preferably employed is of unit construction, as hereinafter more fully described, and is adapted to project pictures in opposite directions from a single film onto both screens 2 and 3. With this arrangement of projecting apparatus and screens it is preferable to have the entrance and exit opening or openings located at the central portion of the auditorium, as indicated by the opening 5, and to have seats 6 located at both sides of the central portion of the auditorium with those at one side facing the adjacent screen 2 and those at the other side facing the other screen 3. It is preferable to have the opening 5 in communication with a central raised platform 7, and to have the portions of the floor at opposite sides of the platform sloping downwardly toward the respective screens. This provides an auditorium with a maximum seating capacity with all of the seats within convenient viewing distance from a display screen, and by employing a single projecting apparatus for the two screens it is in effect the same as supplying the pictures for the screens of two theatres from a single projecting apparatus.

My invention contemplates broadly the projection of pictures at the same time in opposite directions from a single film, and one apparatus for accomplishing this is shown more or less conventionally in Figs. 3 to 6 of the drawings. This apparatus, as illustrated, comprises a base or standard 10 having bracket arms 11 and 12 rising from opposite sides thereof in spaced relation, one supporting a lantern 13 and the other a lantern 14 with the lanterns arranged in transversely offset relation, so that the light rays may be directed from either lantern past the other lantern. Separate housings 15 and 16 are supported by and rise from the base 10 with one in advance of each lantern 13 and 14. Each housing 15 and 16 is provided therethrough with an opening 17 through which the rays from the respective lantern are projected, and each opening is provided with the lens or magnifying projectors used in connection with apparatus of this type.

One of these housings, 15 in the present instance, is provided on its top with a case 18 for receiving a film coil 19 from which the film being shown is intended to unwind, the film being adapted to pass therefrom down through the associated housing 15 past the picture projecting opening 17 and around an idler roll 20 disposed in a case 21 below the housing 15. The film thence passes diagonally upward from the case 21 through a guide passage 22 into a case 23 on top of the housing 16 and around a guide roll 24 in said casing. The film thence passes down through the associated housing 16 past the picture projecting opening 17 therein and winds in a coil around a take-up roll or shaft 25 provided in a case 26 at the lower portion of the housing 16. A shaft 27 is journalled and projects through the two housings 15 and 16 and carries a toothed feed wheel 28 within each housing for engagement with the film to impart feeding movements thereto. There may also be a driving connection 29 between the shaft 27 and take-up shaft 25 to drive the latter at proper speed to wind the film thereon as it passes from the picture

projecting housing 16. While the shaft 27 may be driven in any suitable manner, it is shown in the present instance as having a hand-crank 30 mounted thereon for such purpose.

It is evident in the use of an apparatus of this character that the film unwinding from the roll 19 will first pass the picture projecting lens in the housing 15 so that the rays from the lantern 13 will effect a projection of the film pictures onto one of the screens. The film, after leaving the first projecting lens, passes down around a guide roll 20 and thence up over a second guide roll 24, from which it passes down past the projecting lens associated with the other lantern so that pictures are again projected from the same film onto the other screen or in an opposite direction from the projection of the pictures by the first lantern.

It will be understood that the apparatus shown is more or less conventional in form and merely intended to illustrate the idea of projecting pictures at the same time in opposite directions from a common film, and that numerous changes may be made or other apparatus provided for accomplishing the same purpose without departing from the spirit of the claim.

Having thus described my invention, what I claim as new and desire to secure by Letters Patent is:

In a motion picture apparatus, a standard, bracket arms extending upwardly from said standard in spaced relation, lanterns mounted on the upper end portions of said arms and arranged in transversely offset relation, a pair of housings supported by said base and positioned in advance of each lantern, each housing having an opening thru which light rays from the adjacent lantern may pass, a plurality of means for guiding a film downwardly in one housing past the respective opening and then diagonally upward to the other housing and thence downwardly past the respective opening, a shaft journaled in and projecting through said housing, a toothed wheel within each housing on said shaft for imparting feeding movements to the film, and means for rotating said shaft.

In testimony whereof I have hereunto signed my name to this specification.

ANGELO ROBERT CLAS.