(No Model.)

L. PENTZ.

VEHICLE SPRING.

No. 365,483. Patented June 28, 1887.

Fig. 1.

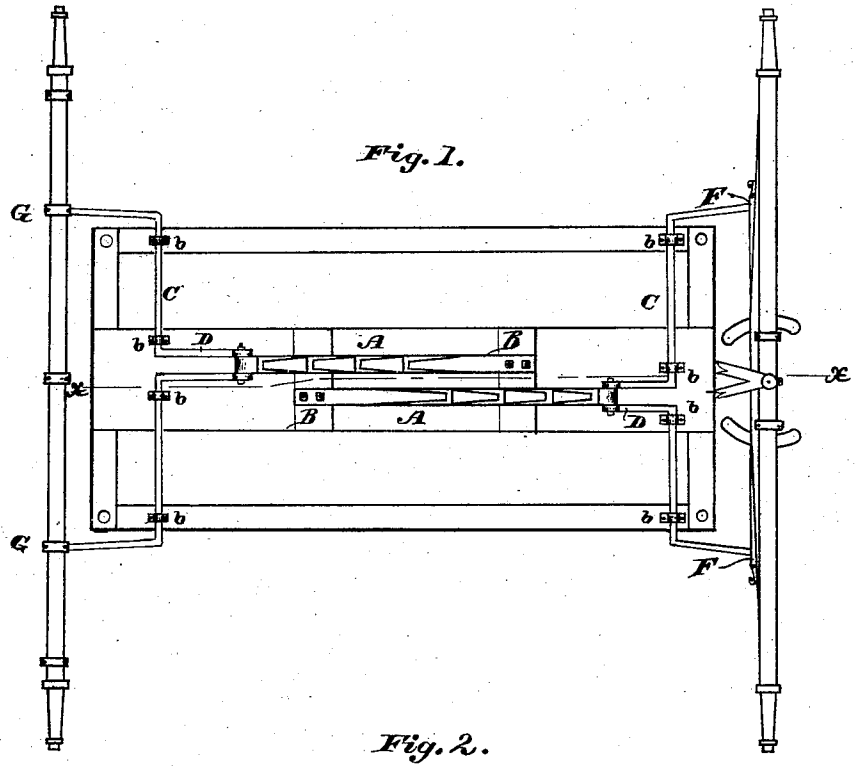

Fig. 2.

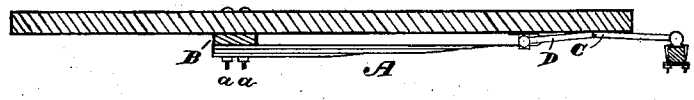

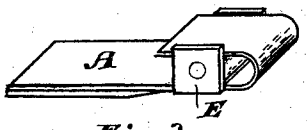

Fig. 3.

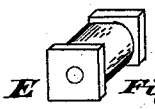

Fig. 4.

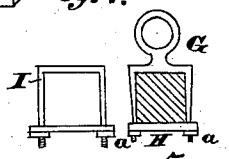

Figs. 5.

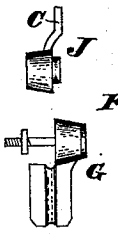

Figs. 6.



Fig. 7.

WITNESSES:

Edw. E. Smith

Fred W. Bond

INVENTOR

Levi Pentz

BY

Fred W. Bond

ATTORNEY

N. PETERS, Photo-Lithographer, Washington, D. C.

UNITED STATES PATENT OFFICE.

LEVI PENTZ, OF CANTON, OHIO, ASSIGNOR OF ONE-HALF TO CHARLES L. PAAR, OF SAME PLACE.

VEHICLE-SPRING.

SPECIFICATION forming part of Letters Patent No. 365,483, dated June 28, 1887.

Application filed February 11, 1887. Serial No. 227,250. (No model.)

To all whom it may concern:

Be it known that I, LEVI PENTZ, a citizen of the United States, residing at Canton, in the county of Stark and State of Ohio, have invented certain new and useful Improvements in Vehicle-Springs; and I do hereby declare that the following is a full, clear, and exact description of the same, reference being had to the annexed drawings, making a part of this specification, and to the letters and figures of reference marked thereon, in which—

Figure 1 is an under side view showing the arrangement of the different parts. Fig. 2 is a longitudinal section on line *x x*, Fig. 1. Fig. 3 is a view showing a portion of a spring and manner of attaching the spring to the connecting-rod. Fig. 4 is a detached view of the connecting collar or spool. Figs. 5 are detached views of the clip and band. Figs. 6 are side views of clip and head. Fig. 7 is a view showing modification of spring.

The present invention has relation to vehicle springs; and its nature consists in the different parts and combination of parts hereinafter described, and particularly pointed out in the claims.

Similar letters of reference indicate corresponding parts in all the figures of the drawings.

In the accompanying drawings, A represents the springs, and may be substantially of the form shown in the drawings, and, as shown, are securely attached to the cross-bar B by means of the clamping-bolts *a*, or their equivalents. The springs A are formed of a sufficient number of leaves to give the springs the desired amount of strength.

To the bed-frame of the vehicle are attached the rods or bars C, said bars being located substantially as shown in Fig. 1. These rods or bars C are each provided with the arms D, and to the inner ends of the arms D are attached the springs A. For the purpose of lessening the friction at the place where the springs A are attached to the arms D, the spools or collars E are provided and the attachment made to the collars or spools. The front or forward rod or bar C is attached to the bar F, which bar is attached to the front or forward axle in the ordinary manner. The rear rod or bar C is attached to the rear axle, said rods or bars being located and adjusted substantially as shown in Fig. 1. The clip G may be substantially of the form shown, and is securely attached by means of bar H and the nuts *a a*, and for the purpose of more securely holding the clip in proper position the band I is placed around the clip G, and for the purpose of holding the band I in proper position on the clip G grooves are formed on the sides of said clip. In use four of the clips G are used, and are located substantially as shown in Fig. 1. The rods or bars C are pivotally attached to the bed-frame of the vehicle by means of the bearings *b*.

It will be seen that by my peculiar manner of attaching the springs A to the vehicle proper, very little, if any, side motion or tilting of the vehicle-body can be had. In the drawings two springs are shown; but it will be seen that one spring will answer the same purpose as the two springs shown, and in case it is desired to use one spring only it may be substantially of the form shown in Fig. 7.

The ends of the bar C are provided with the heads J, which may be substantially as shown in Fig. 6.

Having fully described my invention, what I claim as new, and desire to secure by Letters Patent, is—

1. The combination, with the bars C, connected at their ends to the front and rear axles of a vehicle, and provided with arms D, having collars E, of the springs A, connected with said collars at one end, and at the other ends secured to the vehicle-body, substantially as described.

2. The combination of the bars C, pivotally attached to the vehicle-body, and having the arms D, provided with collars E, the springs A A, connected with said collars and secured to the vehicle-body, and the clips G, secured to the axle and connected with the bars C, substantially as described.

In testimony that I claim the above I have hereunto subscribed my name in the presence of two witnesses.

LEVI PENTZ.

Witnesses:
CHAS. PENTZ,
FRED W. BOND.