US 20070208911A1

(19) United States

(12) Patent Application Publication

ROBBIN et al.

(10) Pub. No.: US 2007/0208911 A1

(43) Pub. Date: Sep. 6, 2007

(54) **MEDIA PLAYER WITH INSTANT PLAY CAPABILITY**

(75) Inventors: **JEFFREY L. ROBBIN**, Los Altos, CA (US); **Ned K. Holbrook**, Sunnyvale, CA (US); **Steven Bollinger**, San Jose, CA (US)

Correspondence Address:
BEYER WEAVER LLP/APPLE INC.
P.O. BOX 70250
OAKLAND, CA 94612-0250 (US)

(73) Assignee: **Apple Inc.**

(21) Appl. No.: **11/746,548**

(22) Filed: **May 9, 2007**

Related U.S. Application Data

(63) Continuation of application No. 11/131,800, filed on May 17, 2005, now Pat. No. 7,234,026. Continuation of application No. 10/118,217, filed on Apr. 5, 2002, now Pat. No. 6,934,812.

(60) Provisional application No. 60/346,236, filed on Oct. 22, 2001.

Publication Classification

(51) **Int. Cl.**
G06F 13/00 (2006.01)

(52) **U.S. Cl.** **711/138**; 711/113

(57) **ABSTRACT**

A media player and a method for operating a media player are disclosed. A media program is able to substantially immediately begin playing after a media play selection has been made. Through intelligent operation, the media program is able to start playing even before the media program has been substantially or completely loaded from disk storage into semiconductor memory (i.e., cache memory). Additionally, the media program can be loaded into semiconductor memory through use of a background process without disturbing the playing of the media program. Further, if desired, the disk storage is able to be aggressively "powered off" when not being accessed, thereby enhancing battery life when being battery-powered.

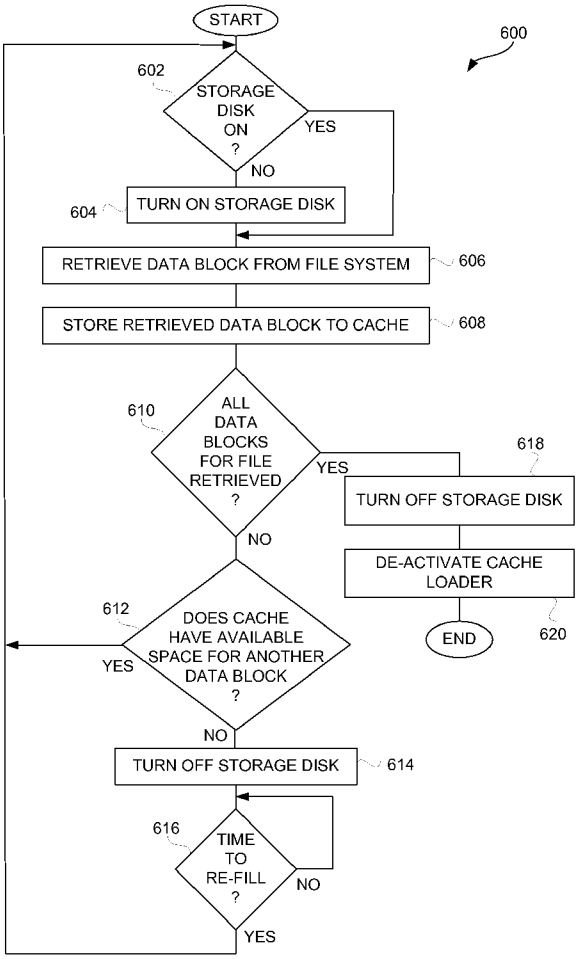

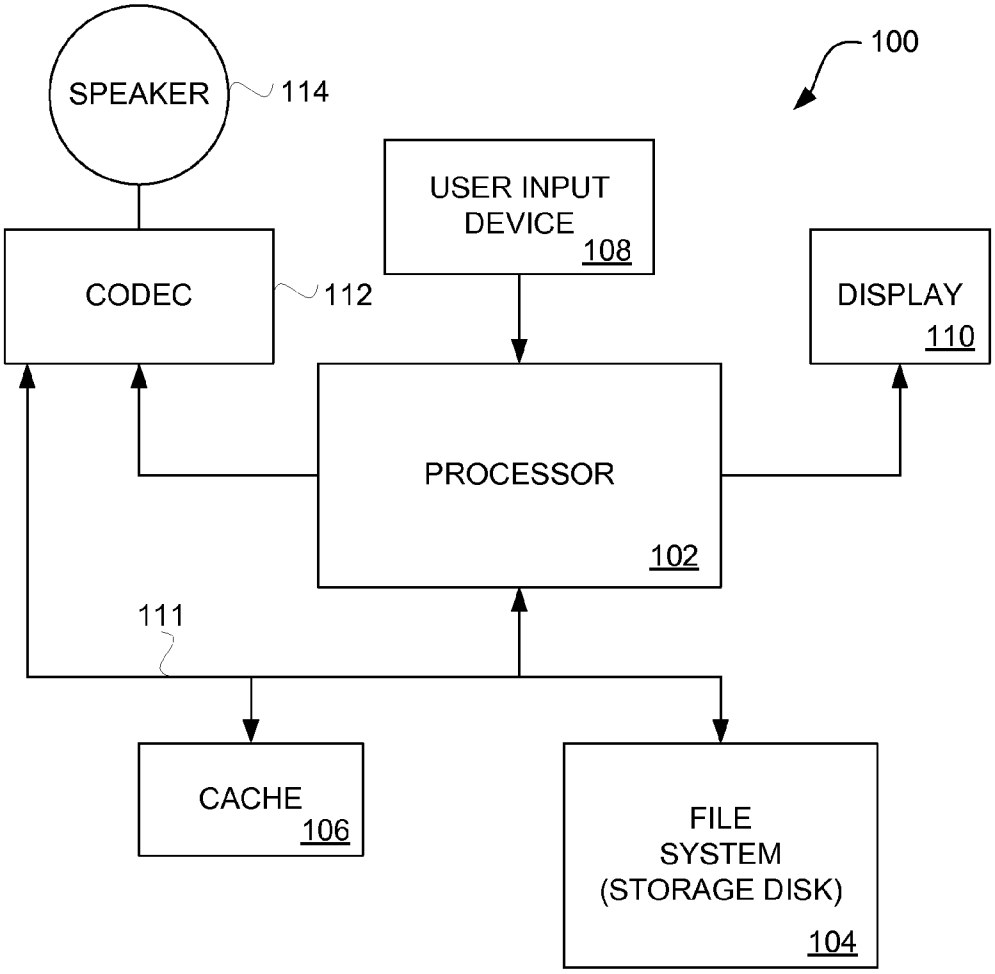
100
SPEAKER
114
USER INPUT DEVICE
108
CODEC
112
DISPLAY
110
PROCESSOR
102
111
CACHE
106
FILE SYSTEM (STORAGE DISK)
104

FIG. 1

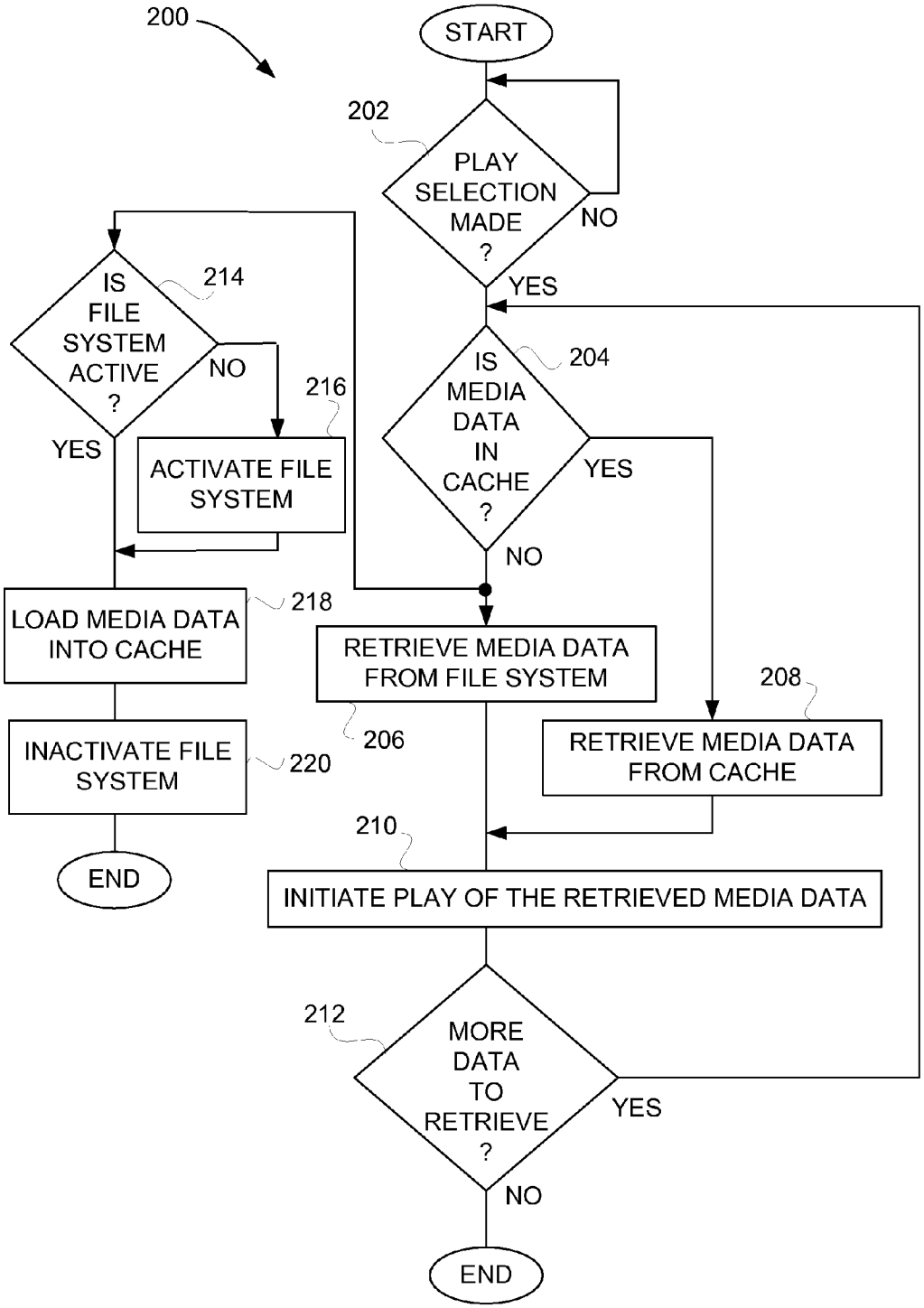
200
START
202
PLAY SELECTION MADE ?
NO
YES
IS FILE SYSTEM ACTIVE ?
214
NO
YES
216
ACTIVATE FILE SYSTEM
IS MEDIA DATA IN CACHE ?
204
YES
NO
LOAD MEDIA DATA INTO CACHE
218
RETRIEVE MEDIA DATA FROM FILE SYSTEM
206
208
RETRIEVE MEDIA DATA FROM CACHE
INACTIVATE FILE SYSTEM
220
END
210
INITIATE PLAY OF THE RETRIEVED MEDIA DATA
212
MORE DATA TO RETRIEVE ?
YES
NO
END

FIG. 2

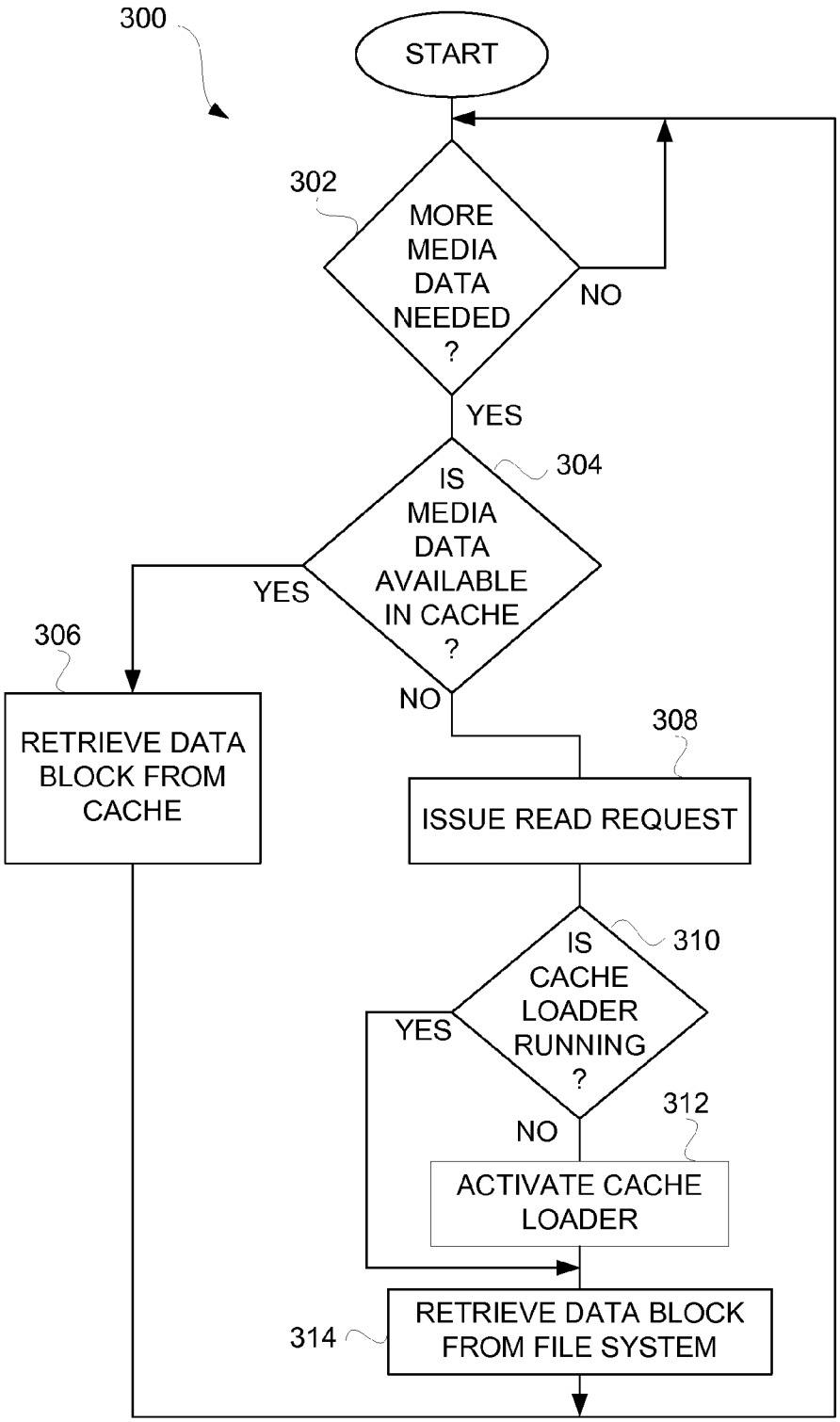
300
START
302
MORE MEDIA DATA NEEDED ?
NO
YES
304
IS MEDIA DATA AVAILABLE IN CACHE ?
YES
NO
306
RETRIEVE DATA BLOCK FROM CACHE
308
ISSUE READ REQUEST
310
IS CACHE LOADER RUNNING ?
YES
NO
312
ACTIVATE CACHE LOADER
314
RETRIEVE DATA BLOCK FROM FILE SYSTEM

FIG. 3

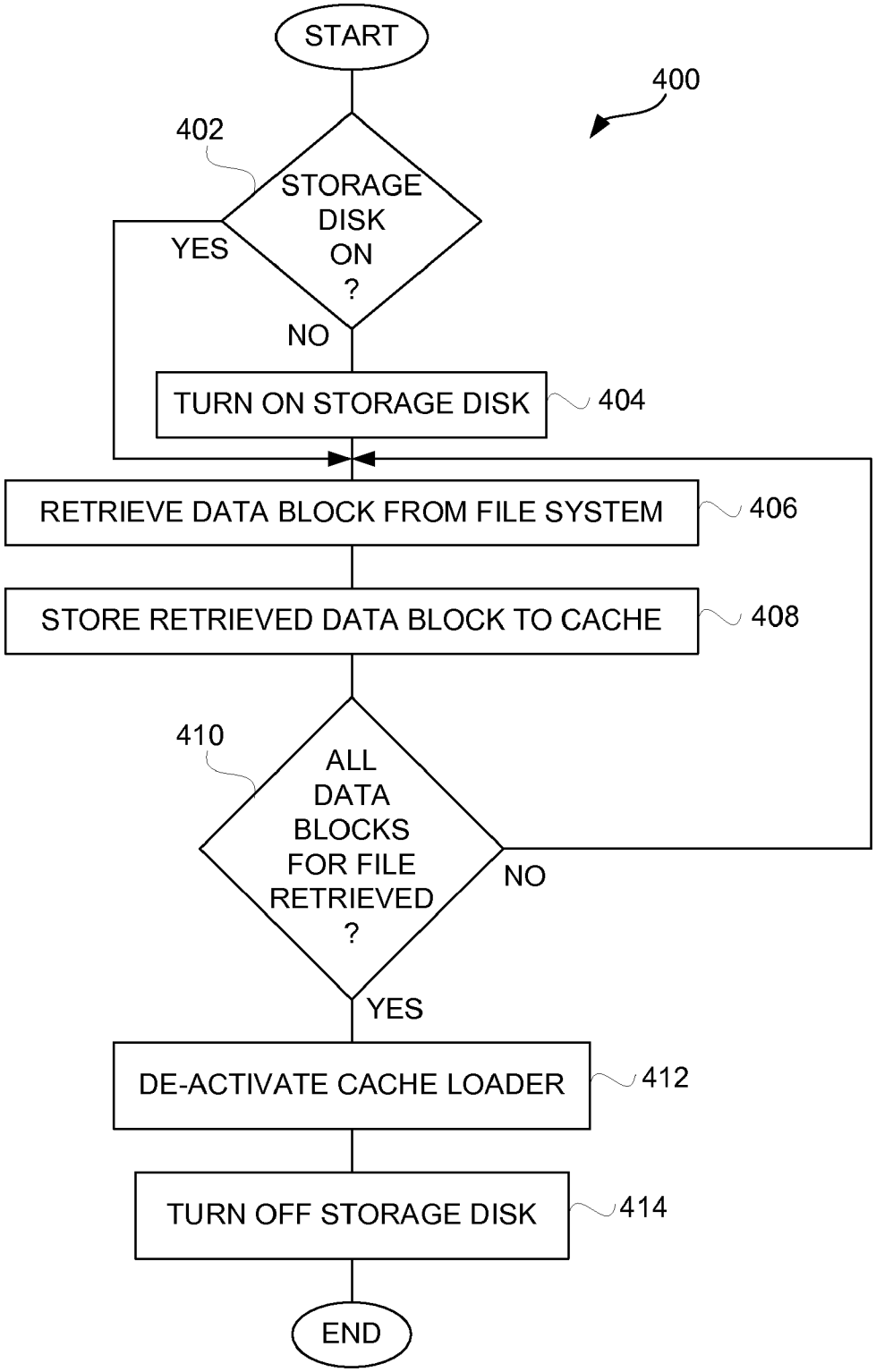
START
400
402
STORAGE DISK ON ?
YES
NO
TURN ON STORAGE DISK
404
RETRIEVE DATA BLOCK FROM FILE SYSTEM
406
STORE RETRIEVED DATA BLOCK TO CACHE
408
410
ALL DATA BLOCKS FOR FILE RETRIEVED ?
NO
YES
DE-ACTIVATE CACHE LOADER
412
TURN OFF STORAGE DISK
414
END

FIG. 4

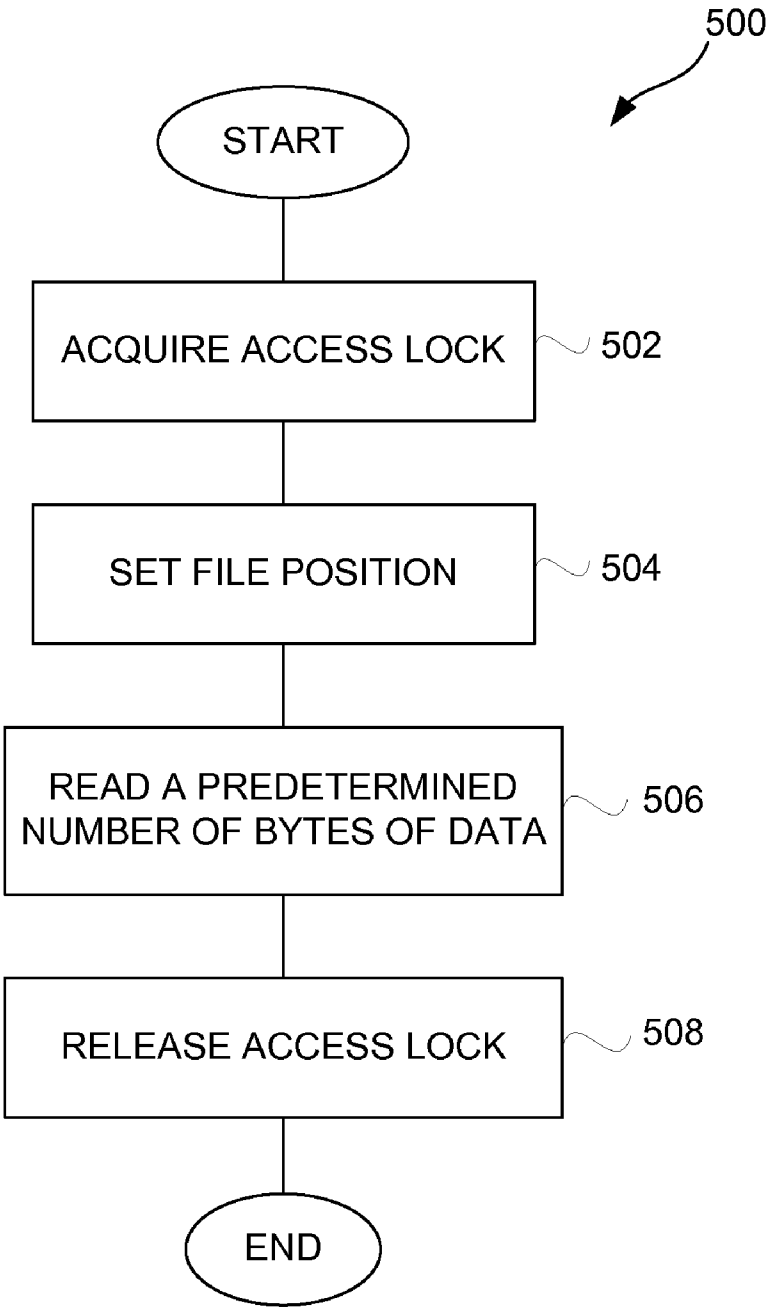
500
START
ACQUIRE ACCESS LOCK
502
SET FILE POSITION
504
READ A PREDETERMINED NUMBER OF BYTES OF DATA
506
RELEASE ACCESS LOCK
508
END

FIG. 5

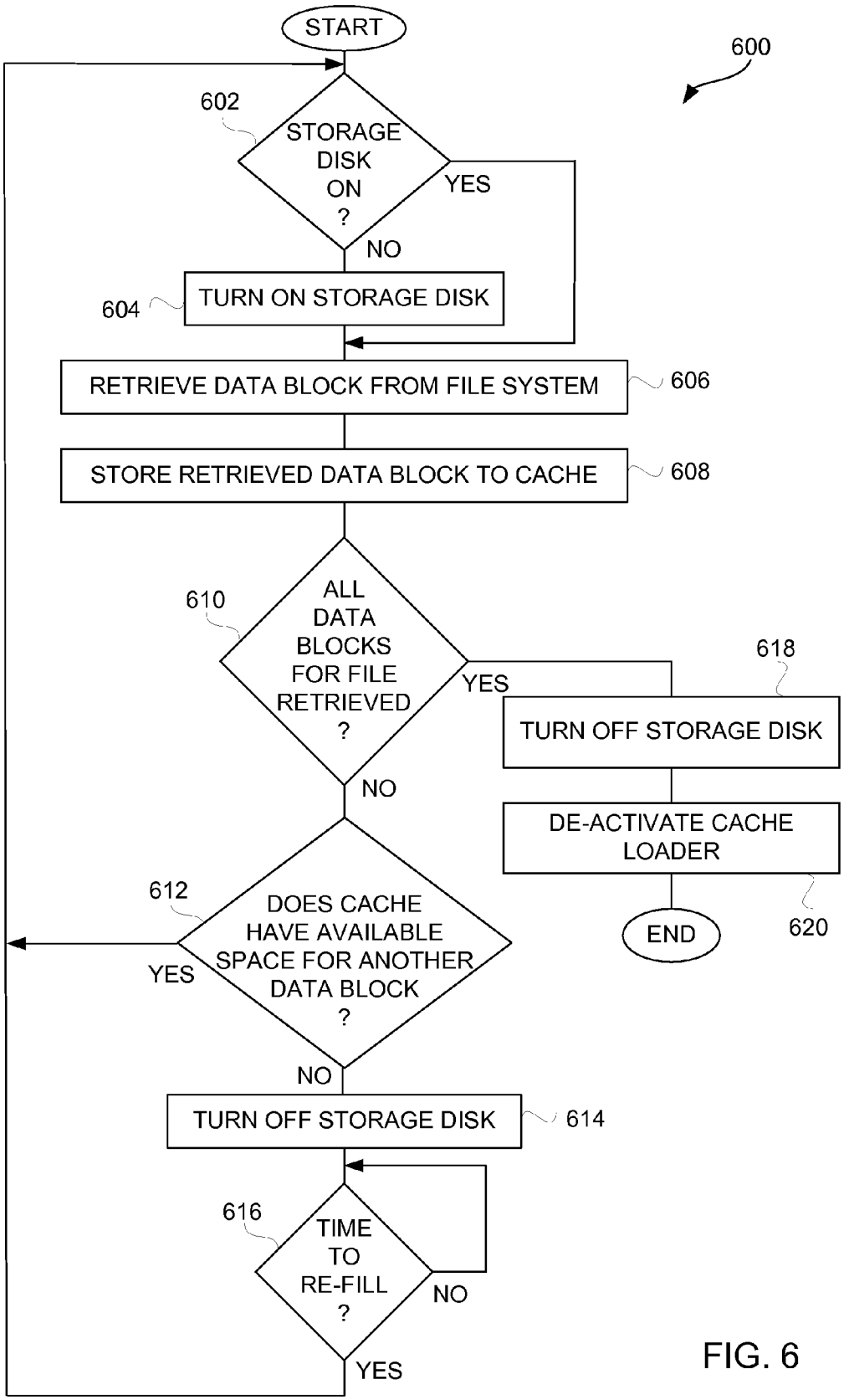
START
600
602
STORAGE DISK ON ?
YES
NO
604
TURN ON STORAGE DISK
RETRIEVE DATA BLOCK FROM FILE SYSTEM
606
STORE RETRIEVED DATA BLOCK TO CACHE
608
610
ALL DATA BLOCKS FOR FILE RETRIEVED ?
YES
618
TURN OFF STORAGE DISK
NO
DE-ACTIVATE CACHE LOADER
612
DOES CACHE HAVE AVAILABLE SPACE FOR ANOTHER DATA BLOCK ?
END
620
YES
NO
TURN OFF STORAGE DISK
614
616
TIME TO RE-FILL ?
NO
YES

FIG. 6

MEDIA PLAYER WITH INSTANT PLAY CAPABILITY

CROSS-REFERENCE TO RELATED APPLICATION

[0001] This application is a continuation of U.S. application Ser. No. 11/131,800 filed May 17, 2005 and entitled "MEDIA PLAYER WITH INSTANT PLAY CAPABILITY," that is, in turn, a continuation of U.S. application Ser. No. 10/118,217 filed Apr. 5, 2002 and entitled "MEDIA PLAYER WITH INSTANT PLAY CAPABILITY," that has issued as U.S. Pat. No. 6,934,812 B1 and which claims the benefit of priority of U.S. Provisional Application No. 60/346,236 filed Oct. 22, 2001 and entitled "MEDIA PLAYER WITH INSTANT PLAY CAPABILITY," all of which are hereby incorporated herein by reference.

BACKGROUND OF THE INVENTION

[0002] 1. Field of the Invention

[0003] The present invention relates to media devices and, more particularly, to playing of media on media devices.

[0004] 2. Description of the Related Art

[0005] Media players are becoming more popular these days. Of particular popularity are portable media players such as MP3 players or DVD players. Media players operate to play media items for their user that are stored within the media players. The media items are most commonly audio items (e.g., songs) but could also be video items (e.g., DVDs). Typically, an MP3 player will store various audio items internally on a storage disk. When the user makes a selection to play one of the stored audio items, the audio item must first be loaded into semiconductor memory (i.e., Random-Access Memory) before the audio item begins to be played. Unfortunately, the delay in reading the rather large file for the audio item is unsatisfactory to users who are anxious to hear the audio item they have already selected to be played. Thus, there is a need for improved techniques for media players to play media items.

SUMMARY OF THE DESCRIBED EMBODIMENTS

[0006] Broadly speaking, the described embodiments relate to a media player and a method for operating a media player. According to one aspect of the described embodiments, a method for conserving power in a battery powered media player having a disk-based data store and a semiconductor-based data store having a faster access time than does the disk-based data store, and wherein the disk-based data store consumes more power than does the semiconductor-based data store is described. The method is carried out by performing at least the operations of retrieving a first portion of an identified media item from the semi-conductor based data store, wherein media data for the identified media item includes a plurality of data portions, the data portions including the first portion and remaining portions, the remaining portions being different than and not including the first portion, playing the first portion without first storing to the semiconductor-based data store, transferring substantially all of the remaining portions from the disk-based data store to the semi-conductor-based data store, and de-activating the disk-based data store after substantially all of the remaining portions have been transferred thereby substantially reducing power consumption by the media player.

[0007] In another embodiment, a method of selectively activating the disk-based data store in a portable media player having a disk-based data store and a semiconductor based data store is described. The method is carried out by performing at least the following operations: receiving a media item selection wherein media data for the selected media item includes a plurality of data portions, the data portions including a first portion and remaining portions that are different than and do not include the first portion, activating the disk-based data store and accessing at least the first portion, playing the first portion retrieved from the disk-based data store without first storing to the semiconductor-based data store, transferring the remaining portions from the disk-based data store to the semi-conductor-based data store concurrent with the playing of the first portion, and de-activating the disk-based data store after the remaining portions are transferred thereby substantially reducing power consumption by the media player.

[0008] In yet another embodiment, computer program product executable by a processor for conserving power in a battery powered media player having a disk-based data store and a semiconductor-based data store having a faster access time than does the disk-based data store, and wherein the disk-based data store consumes more power than does the semiconductor-based data store is described. The computer program product includes at least computer code for retrieving a first portion of an identified media item from the semi-conductor based data store, wherein media data for the identified media item includes a plurality of data portions, the data portions including the first portion and remaining portions, the remaining portions being different than and not including the first portion, computer code for playing the first portion without first storing to the semiconductor-based data store, computer code for transferring substantially all of the remaining portions from the disk-based data store to the semi-conductor-based data store, computer code for de-activating the disk-based data store after substantially all of the remaining portions have been transferred thereby substantially reducing power consumption by the media player, and computer readable medium for storing the computer code.

[0009] In still another embodiment, a consumer electronics product is described that includes at least a first storage device that stores a plurality of media items, a user input device that enables a user of the consumer electronics product to select a particular media item from the plurality of media items, a second storage device capable of storing at least one of the media items having substantially faster access than does the first storage device and a processor operatively connected to the first storage device the user input device and the second storage device. The processor retrieves and plays a first portion of the media data directly from the first storage device while concurrently initiating background loading of subsequent portions of the media data for the particular media item from the first storage device into the second storage device. Once substantially all the subsequent portions of the media data have been loaded, the processor de-activates the first storage device thereby substantially reducing power consumption of the consumer electronic product.

[0010] The invention can be implemented in numerous ways, including as a method, system, device, apparatus, or computer readable medium.

[0011] Other aspects and advantages of the invention will become apparent from the following detailed description taken in conjunction with the accompanying drawings which illustrate, by way of example, the principles of the invention.

BRIEF DESCRIPTION OF THE DRAWINGS

[0012] The invention will be readily understood by the following detailed description in conjunction with the accompanying drawings, wherein like reference numerals designate like structural elements, and in which:

[0013] FIG. **1** is a block diagram of a media player according to one embodiment of the invention.

[0014] FIG. **2** is a flow diagram of media play processing according to one embodiment of the invention.

[0015] FIG. **3** is a flow diagram of media data retrieval processing according to one embodiment of the invention.

[0016] FIG. **4** is a flow diagram of cache loader processing according to one embodiment of the invention.

[0017] FIG. **5** is a flow diagram of data access processing according to one embodiment of the invention.

[0018] FIG. **6** is a flow diagram of cache loader processing according to another embodiment of the invention.

DETAILED DESCRIPTION OF THE INVENTION

[0019] The invention relates to a media player and a method for operating a media player. According to one aspect of the invention, a media program is able to substantially immediately begin playing after a media play selection has been made. Through intelligent operation, the media program is able to start playing even before the media program has been substantially or completely loaded from disk storage into semiconductor memory (i.e., cache memory). According to another aspect of the invention, the loading of the media program into semiconductor memory is performed in a background process without disturbing the playing of the media program. Still another aspect of the invention is that the disk storage is able to be aggressively "powered off" when not being accessed, thereby enhancing battery life when being battery powered. The invention is particularly suitable for use with portable media players.

[0020] Embodiments of this aspect of the invention are discussed below with reference to FIGS. **1-6**. However, those skilled in the art will readily appreciate that the detailed description given herein with respect to these figures is for explanatory purposes as the invention extends beyond these limited embodiments.

[0021] FIG. **1** is a block diagram of a media player **100** according to one embodiment of the invention. The media player **100** includes a processor **102** that pertains to a microprocessor or controller for controlling the overall operation of the media player **100**. The media player **100** stores media data pertaining to media items in a file system **104** and a cache **106**. The file system **104** is, typically, a storage disk or a plurality of disks. The file system typically provides high capacity storage capability for the media player **100**. However, since the access time to the file system **104** is relatively slow, the media player **100** also includes a cache **106**. The cache **106** is, for example, Random-Access Memory (RAM) provided by semiconductor memory. The relative access time to the cache **106** is substantially shorter than for the file system **104**. However, the cache **106** does not have the large storage capacity of the file system **104**.

[0022] Further, the file system **104**, when active, consumes more power than does the cache **106**. The power consumption is particularly important when the media player **100** is a portable media player that is powered by a battery (not shown).

[0023] The media player **100** also includes a user input device **108** that allows a user of the media player **100** to interact with the media player **100**. For example, the user input device **108** can take a variety of forms, such as a button, keypad, dial, etc. Still further, the media player **100** includes a display **110** (screen display) that can be controlled by the processor **102** to display information to the user. A data bus **111** can facilitate data transfer between at least the file system **104**, the cache **106**, the processor **102**, and the CODEC **112**.

[0024] In one embodiment, the media player **100** serves to store a plurality of media items (e.g., songs) in the file system **104**. When a user desires to have the media player play a particular media item, a list of available media items is displayed on the display **110**. Then, using the user input device **108**, a user can select one of the available media items. The processor **102**, upon receiving a selection of a particular media item, supplies the media data (e.g., audio file) for the particular media item to a coder/decoder (CODEC) **112**. The CODEC **112** then produces analog output signals for a speaker **114**. The speaker **114** can be a speaker internal to the media player **100** or external to the media player **100**. For example, headphones or earphones that connect to the media player **100** would be considered an external speaker.

[0025] According to the invention, the processor **102** controls the playing of the particular media item such that upon receiving the user's selection of the particular media item, the processor **102** immediately accesses the file system **104** or the cache **106** to retrieve an initial portion of the media data and supplies it to the CODEC **112** and thus begins playing the media item. When the media item is not initially available in the cache **106** (which is typically the case), the initial portion is retrieved from the file system **104**. However, since the access speed of the file system **104** is relatively slow compared to the access speed needed for the playing of the media item, and because the file system **104** consumes significant amounts of power of the media player **100**, the media data for the media item is loaded into the cache **106** such that once the media data has been loaded into the cache **106**, all remaining portions of the media data for the particular media item are retrieved from the cache **106**. Consequently, the media item is played almost substantially immediately following the user's selection because the initial portion is obtained immediately from the file system **104** and then subsequent portions are obtained from the cache **106**. Here, the cache **106** is loaded at the same time that the retrieval or playing of the initial portion of the media data occurs.

[0026] Still further, once the media data for the particular media item has been loaded into the cache **106**, the file

system **104** can be inactivated (e.g., placed in a low power mode) to save power consumption for the media player **100**. By deactivating the file system **104** in this matter, battery life of the media player **100** is able to be significantly improved, assuming the media player **100** is a battery-operated device (portable device).

[**0027**] In one embodiment, the media player is a portable computing device dedicated to processing media such as audio, video or images. For example, the media player **100** can be a music player (e.g., MP3 player), a game player, a video player, a video recorder, a camera, an image viewer and the like. These devices are generally battery operated and highly portable so as to allow a user to listen to music, play games or video, record video or take pictures wherever the user travels. In one implementation, the media player is a handheld device that is sized for placement into a pocket or hand of the user. By being handheld, the media player is relatively small and easily handled and utilized by its user. By being pocket sized, the user does not have to directly carry the device and therefore the device can be taken almost anywhere the user travels (e.g., the user is not limited by carrying a large, bulky and often heavy device, as in a portable computer). Furthermore, the device may be operated by the users hands, no reference surface such as a desktop is needed.

[**0028**] FIG. **2** is a flow diagram of media play processing **200** according to one embodiment of the invention. The media play processing **200** is, for example, performed by the media player **100** illustrated in FIG. **1**.

[**0029**] The media play processing **200** initially begins with a decision **202** that determines whether a play selection has been made. When the decision **202** determines that a play selection has not been made, then the media play processing **200** awaits such a selection. In other words, the media play processing **200** is effectively invoked when a play selection is made. In any case, once the decision **202** determines that a play selection has been made, then a decision **204** determines whether the media data for the play selection is in a cache (e.g., cache **106**, FIG. **1**). When the decision **204** determines that the media data is not in the cache, then the media data is retrieved **206** from a file system (e.g., file system **104**, FIG. **1**). Alternatively, when the decision **204** determines that the media data is in the cache, then the media data is retrieved **208** from the cache. Here, it is preferable that the media data be retrieved from the cache because its access time is substantially shorter than that of the file system. In addition, when the media data is available in the cache, the file system is typically not needed, and thus it can be placed in a low power mode to reduce power consumption.

[**0030**] Following operations **206** or **208**, the media play processing **200** initiates **210** playing of the retrieved media data. Here, the retrieved media data can be directed to be played so that the media player produces multimedia output (e.g., audio) for its user. However, only a portion of the media data is initially obtained and thus a decision **212** next determines whether there is more data to be retrieved. When the decision **212** determines that there is more data associated with the media item being played to be retrieved, then the media play processing **200** returns to repeat the decision **204** and subsequent operations so that additional media data can be retrieved and played.

[**0031**] Concurrently with the operations of **206-212**, when the decision **204** determines that the media data is not in the cache, then other processing can be invoked to load the media data into the cache. In particular, according to one embodiment, such processing is performed by a separate process (e.g., thread) operating within the media player. According to such processing, a decision **214** determines whether the file system is active. When the decision **214** determines that the file system is not active, then the file system is activated **216**. Here, activation refers to placing the file system in its normal operating mode, and an inactivated file system refers to a reduced-power operation mode. Following the operation **216**, as well as following the decision **214** when the file system is already active, the media data for the particular media item is loaded **218** into the cache. Here, the loading **218** occurs by this process while other operations are being performed in another process to retrieve and play at least an initial portion of the media data (operations **206-212**). Once the media data has been loaded **218** into the cache, the file system can be inactivated **220** to reduce power consumption. Typically, the file system is not needed for a period of time, at least on the order of the duration of the media item being played, since the remaining amount of media data is now available within the cache. Following the operation **220**, the cache loading process is complete and ends. Further, once the cache loading process has completed, the next time the media play processing **200** performs the decision **204**, the result will be that all subsequent media data for the particular media item will be retrieved from the cache at operation **208**.

[**0032**] FIG. **3** is a flow diagram of media data retrieval processing **300** according to one embodiment of the invention. The media data retrieval processing **300** is, for example, performed by a media device, such as the media device **100** illustrated in FIG. **1**. In one embodiment, the media data retrieval processing **300** is performed or controlled by the processor **102** of the media device **100** shown in FIG. **1**.

[**0033**] The media data retrieval processing **300** begins with a decision **302** that determines whether more media data is needed. Hence, the decision **302**, for example, pertains to the CODEC **112** requesting media data pertaining to a media item that is to be played by the media device **100**. Typically, the CODEC **112** operates to buffer a short play duration of media data and thus periodically requests additional data from data storage provided by the media device **100**. Hence, when the decision **302** determines that more media data is not needed, then the media data retrieval processing **300**, in effect, awaits the need (or request) for more media data.

[**0034**] Once the decision **302** determines that more media data is needed, then a decision **304** determines whether the media data is available in the cache memory. For example, the cache memory can be the cache **106** illustrated in FIG. **1**. When the decision **304** determines that the media data is available in the cache memory, then a data block is retrieved from the cache memory. Here, the data block being retrieved **306** pertains to the next needed portion of the media data associated with the media item.

[**0035**] On the other hand, when the decision **304** determines that the media data is not available in the cache memory, then processing is performed to retrieve the media

data from the file system. The file system is, for example, the file system **104** illustrated in FIG. **1**. More particularly, a read request is issued **308** to the file system to read a data block. The read request prepares the file system **104** (storage disk) for read/write access. For example, if the file system **104** is in an inactive (low-power) state, the read request can return the file system **104** to an active state. Typically, the storage disk is spinning and ready for read/write access when in the active state.

[**0036**] Next, a decision **310** determines whether a cache loader is already running. Here, "running" of the cache loader means that the cache loader is active in loading media data into the cache memory. When the decision **310** determines that the cache loader is not already running, then the cache loader is activated **312**. Alternatively, when the decision **310** determines that the cache loader is already running, then the operation **312** is bypassed. Following the operation **312**, as well as following the decision **310** when the cache loader is already running, a data block is retrieved **314** from the file system (storage disk). Here, the size of the data block being retrieved **314** is kept small so that the retrieval time from the file system is still relatively short (e.g., a few milliseconds) and so that retrieval times for other concurrent accesses to the file system (such as by the cache loader) are not significantly impeded and thus can be performed in a timely fashion. As an example, the data block can have a reasonably small size, such as a size in the range of 32-256 kilobytes and more likely one of 32, 64, 128 or 256 kilobytes. Following the operations **306** and **314**, the media data retrieval processing **300** returns to repeat the decision **302** and subsequent operations so that additional media data can be obtained in the same manner.

[**0037**] FIG. **4** is a flow diagram of cache loader processing **400** according to one embodiment of the invention. The cache loader processing **400** is, for example, processing performed by the cache loader that is activated in operation **312** illustrated in FIG. **3**.

[**0038**] The cache loader processing **400** begins with a decision **402** that determines whether the storage disk is "on" (active). Here, the storage disk (i.e., hard drive) pertains to disk storage of data provided by a file system, namely, the file system **104** illustrated in FIG. **1**. More generally, the decision **402** could indicate whether the file system is active. In any case, when the decision **402** determines that the storage disk is not "on," then the storage disk is turned on **404**. This is also referred to as "spinning-up" the storage disk. Access times to storage disks are considerably slower when the storage disk is not already on (spinning). "Spinning-up" the storage disk is a prerequisite to accessing data from the storage disk. Hence, the operations **402** and **404** cause the storage disk to be turned on **404** when not already turned on.

[**0039**] Thereafter, a data block is retrieved **406** from the file system. Here, for example, a block of data pertaining to a particular media item is retrieved **406** from the file system **104** (storage disk). The retrieved data block is then stored **408** to the cache memory. For example, the cache memory could be the cache **106** illustrated in FIG. **1**.

[**0040**] A decision **410** then determines whether all of the data blocks for the file (i.e., media item) have been retrieved. When the decision **410** determines that all of the data blocks for the file have not yet all been retrieved, then the cache loader processing **400** returns to repeat the operation **406** and subsequent operations so that additional data blocks pertaining to the file (i.e., media item) can be retrieved **406** and stored **408** into the cache memory. Once the decision **410** determines that all of the data blocks for the file have been retrieved, then the cache loader is de-activated **412**. The cache loader is the process that is performing the cache loader processing **400** and thus, when de-activated **412**, the process that is performing the cache loader processing **400** can be closed. Additionally, the storage disk is then turned off **414**. When the storage disk is turned off **414**, the media device is able to conserve the energy or power it would otherwise use to keep the storage disk turned on.

[**0041**] The invention is well suited for implementation using multiple threads of execution, such as provided by a multi-threaded programming environment. For example, the media data retrieval processing **300** of FIG. **3** and the cache loader processing **400** can be implemented by separate threads. The processing shown in FIGS. **5** and **6** below can also pertain to other threads of execution.

[**0042**] FIG. **5** is a flow diagram of data access processing **500** according to one embodiment of the invention. The data access processing **500** is, for example, performed by the operation **314** of the media data retrieval processing **300** shown in FIG. **3** or the operation **406** of the cache loader processing **400** illustrated in FIG. **4**. In any case, the data access processing **500** operates to acquire **502** an access lock for access to the file system. Given that multiple different threads of execution can be seeking the same access lock to the file system, these different threads contend for acquisition of the access lock. Hence, the data access processing **500** could be delayed in the event that another thread presently holds the access lock. Nevertheless, per program or implementation design, each of the threads that may be utilizing the access lock do so only for a short duration of time (on the order of milliseconds). Hence, any delay incurred while waiting for the access lock is manageable. After the access lock is acquired **502**, a file position is set **504**. The file position indicates a starting point in a file at which data is to be read. Hence, after the file position is set **504**, a predetermined number of bytes of data can be read **506** from the file stored in the file system. Here, the predetermined number of bytes is also managed such that the block of data being read is rather small (e.g., 32, 64, 128 or 256 kilobytes) so that the access lock is not unavailable for an extended period of time. After the predetermined number of bytes of data is read **506**, the access lock is released **508** because the access to the file system is, at this point, completed. Hence, after the access lock is released **508**, the data access processing **500** is complete and ends.

[**0043**] FIG. **6** is a flow diagram of cache loader processing **600** according to another embodiment of the invention. The cache loader processing **600** has features similar to the cache loader processing **400** illustrated in FIG. **4**. However, the cache loader processing **600** is designed to provide efficient utilization of the storage disk in cases in which the file (i.e., media item) to be loaded in the cache memory exceeds the available capacity of the cache memory.

[**0044**] The cache loader processing **600** begins with a decision **602** that determines whether the storage disk (e.g., hard drive) is "on." When the decision **602** determines that the storage disk is not "on," then the storage disk is turned

on **604**. Alternatively, when the decision **602** determines that the storage disk is already "on," then the operation **604** is bypassed. In any case, a data block is then retrieved **606** from the file system. As an example, the retrieval **606** of the data block can be performed in accordance with the data access processing **500** discussed above with respect to FIG. **5**. Once the data block is retrieved from the file system, the retrieved data block is then stored **608** into the cache memory. Next, a decision **610** determines whether all of the data blocks for the file (i.e., media item) have been retrieved. When the decision **610** determines that all of the data blocks for the file have not yet been retrieved, then a decision **612** determines whether the cache memory has available space for another data block. When the decision **612** determines that the cache memory does have available space for another data block, then the cache loader processing **600** can return to repeat the operation **602** and subsequent operations so that at least one additional data block for the file (i.e., media item) can be retrieved and stored in the cache memory. On the other hand, when the decision **612** determines that the cache memory does not have available space for any additional data blocks, then the storage disk is turned off **614**. By turning off the hard drive, the media device is able to conserve energy when the file system is temporarily not needed. A decision **616** then determines whether it is time to re-fill the cache memory. When the decision **616** determines that it is not yet time to fill the cache memory, the cache loader processing **600** awaits a more suitable time. In other words, the decision **616** causes a delay in the cache loader processing **600**. The delay can be a predetermined delay, or can be signaled based upon the amount of available space in the cache memory or the amount of data remaining to be played before additional data is needed. Hence, regardless of the particular criteria utilized, when the decision **616** determines that it is time to re-fill the cache memory, then the cache loader processing **600** returns to repeat the decision **602** and subsequent operations so that one or more additional data blocks can be retrieved from the file system and stored to the cache memory such that the data, when needed by other threads, is available in the cache memory for high-speed access.

[**0045**] On the other hand, when the decision **610** determines that all of the data blocks for the file (i.e., media item) have been retrieved, then the storage disk is turned off **618**. Here, the storage disk is turned off **618** because the file (i.e., media item) has been completely retrieved from the file system and thus the storage disk is no longer needed with respect to that media item. Of course, if another thread is in need of the file system, the storage disk could be left "on" and the other data access performed. In any case, the cache loader is then deactivated **620** because the file (media item) has been fully acquired and stored in the cache memory. Following the operation **620**, the cache loader processing **600** is complete and ends.

[**0046**] The various aspects or features of the invention described above can be used alone or in various combinations.

[**0047**] Although the media items of emphasis in several of the above embodiments where audio items (e.g., audio files or songs), the media items are not limited to audio items. For example, the media item can alternatively, pertain to videos (e.g., movies) or images (e.g., photos).

[**0048**] The invention is preferably implemented by software, but can also be implemented in hardware or a combination of hardware and software. The invention can also be embodied as computer readable code on a computer readable medium. The computer readable medium is any data storage device that can store data which can thereafter be read by a computer system. Examples of the computer readable medium include read-only memory, random-access memory, CD-ROMs, DVDs, magnetic tape, optical data storage devices, and carrier waves. The computer readable medium can also be distributed over network-coupled computer systems so that the computer readable code is stored and executed in a distributed fashion.

[**0049**] The advantages of the invention are numerous. Different embodiments or implementations may yield one or more of the following advantages. One advantage of the invention is that media items can be played by a media device almost immediately after a play selection is requested. Consequently, users tend to be less anxious and less frustrated because the delay imposed before initiating playing is able to be substantially reduced. Another advantage of the invention is that media data (e.g., for audio playing) is able to be retrieved from either a cache or a file system with minor changes to other system components or software. Another advantage of the invention is that power consumption is reduced by transferring data to a cache memory and deactivating a file system.

[**0050**] The many features and advantages of the present invention are apparent from the written description and, thus, it is intended by the appended claims to cover all such features and advantages of the invention. Further, since numerous modifications and changes will readily occur to those skilled in the art, the invention should not be limited to the exact construction and operation as illustrated and described. Hence, all suitable modifications and equivalents may be resorted to as falling within the scope of the invention.

What is claimed is:

1. A method for conserving power in a battery powered media player having a disk-based data store and a semiconductor-based data store having a faster access time than does the disk-based data store, and wherein the disk-based data store consumes more power than does the semiconductor-based data store, comprising:

retrieving a first portion of an identified media item from the semi-conductor based data store, wherein media data for the identified media item includes a plurality of data portions, the data portions including the first portion and remaining portions, the remaining portions being different than and not including the first portion;

playing the first portion without first storing to the semiconductor-based data store;

transferring substantially all of the remaining portions from the disk-based data store to the semi-conductor-based data store; and

de-activating the disk-based data store after substantially all of the remaining portions have been transferred thereby substantially reducing power consumption by the media player.

2. A method as recited in claim 1, further comprising:

playing the remaining portions of the media data retrieved from the semiconductor-based data store.

3. A method as recited in claim 2, wherein the playing of the remaining portions comprises:

determining when additional media data is needed beyond the first portion;

retrieving at least one of the remaining portions of the media data from the semiconductor-based data store when the determining determines that the additional media data is needed; and

playing the at least one of the remaining portions of the media data retrieved from the semiconductor-based data store.

4. A method as recited in claim 1, wherein the first and remaining portions have a size in a range of about from 32 kilobytes to about 256 kilobytes.

5. A method as recited in claim 1, wherein the media player is a pocket-sized device.

6. A method as recited in claim 1, wherein the media player is a handheld music player.

7. A method as recited in claim 1,

wherein the disk-based data store of the media player stores a plurality of media items, and wherein the media player comprises at least one of an audio player, a video player and an image viewer, and

wherein the media items include at least one of audio files of songs, video files of videos and image files of images.

8. A method as recited in claim 1, further comprising:

receiving a media item selection corresponding to the identified media item;

determining if the media data associated with the identified media item is stored in the semiconductor-based data store;

activating the disk-based data store if the media data associated with the identified media item is not stored in the semiconductor-based data store; and

transferring at least the first portion of the media data from the disk-based data store to the semiconductor-based data store.

9. In a portable media player having a disk-based data store and a semiconductor based data store, a method of selectively activating the disk-based data store, comprising:

receiving a media item selection wherein media data for the selected media item includes a plurality of data portions, the data portions including a first portion and remaining portions that are different than and do not include the first portion;

activating the disk-based data store and accessing at least the first portion;

playing the first portion retrieved from the disk-based data store without first storing to the semiconductor-based data store;

transferring the remaining portions from the disk-based data store to the semi-conductor-based data store concurrent with the playing of the first portion; and

de-activating the disk-based data store after the remaining portions are transferred thereby substantially reducing power consumption by the media player.

10. A method as recited in claim 9, further comprising:

playing the remaining portions retrieved from the semiconductor-based data store.

11. A method as recited in claim 9, wherein if the media data for the selected media item is stored in the semiconductor data store, then playing the selected media item without activating the disk-based data store.

12. A method as recited in claim 10, wherein the playing of the remaining portions comprises:

determining when additional media data is needed beyond the first portion;

retrieving at least one of the remaining portions of the media data from the semiconductor-based data store when the determining determines that the additional media data is needed; and

playing the at least one of the remaining portions of the media data retrieved from the semiconductor-based data store.

13. A method as recited in claim 9, wherein the first and remaining portions have a size in a range of about from 32 kilobytes to about 256 kilobytes.

14. A method as recited in claim 9, wherein the media player is a pocket-sized device.

15. A method as recited in claim 9, wherein the media player is a handheld music player.

16. A method as recited in claim 9,

wherein the disk-based data store of the media player stores a plurality of media items, and wherein the media player comprises at least one of an audio player, a video player and an image viewer, and

wherein the media items include at least one of audio files of songs, video files of videos and image files of images.

17. A method as recited in claim 9, further comprising:

receiving a media item selection corresponding to the identified media item;

determining if the media data associated with the identified media item is stored in the semiconductor-based data store;

activating the disk-based data store if the media data associated with the identified media item is not stored in the semiconductor-based data store; and

transferring at least the first portion of the media data from the disk-based data store to the semiconductor-based data store.

18. Computer program product executable by a processor for conserving power in a battery powered media player having a disk-based data store and a semiconductor-based data store having a faster access time than does the disk-based data store, and wherein the disk-based data store consumes more power than does the semiconductor-based data store, comprising:

computer code for retrieving a first portion of an identified media item from the semi-conductor based data store, wherein media data for the identified media item includes a plurality of data portions, the data portions

including the first portion and remaining portions, the remaining portions being different than and not including the first portion;

computer code for playing the first portion without first storing to the semiconductor-based data store;

computer code for transferring substantially all of the remaining portions from the disk-based data store to the semi-conductor-based data store;

computer code for de-activating the disk-based data store after substantially all of the remaining portions have been transferred thereby substantially reducing power consumption by the media player; and

computer readable medium for storing the computer code.

19. Computer program product as recited in claim 18, further comprising:

computer code for playing the remaining portions of the media data retrieved from the semiconductor-based data store.

20. Computer program product as recited in claim 19, wherein the playing of the remaining portions comprises:

computer code for determining when additional media data is needed beyond the first portion;

computer code for retrieving at least one of the remaining portions of the media data from the semiconductor-based data store when the determining determines that the additional media data is needed; and

computer code for playing the at least one of the remaining portions of the media data retrieved from the semiconductor-based data store.

21. Computer program product as recited in claim 18, wherein the first and remaining portions have a size in a range of about from 32 kilobytes to about 256 kilobytes.

22. Computer program product as recited in claim 18, wherein the media player is a pocket-sized device.

23. Computer program product as recited in claim 18, wherein the media player is a handheld music player.

24. Computer program product as recited in claim 18,

wherein the disk-based data store of the media player stores a plurality of media items, and wherein the media player comprises at least one of an audio player, a video player and an image viewer, and

wherein the media items include at least one of audio files of songs, video files of videos and image files of images.

25. Computer program product as recited in claim 18, further comprising:

computer code for receiving a media item selection corresponding to the identified media item;

computer code for determining if the media data associated with the identified media item is stored in the semiconductor-based data store;

computer code for activating the disk-based data store if the media data associated with the identified media item is not stored in the semiconductor-based data store; and

computer code for transferring at least the first portion of the media data from the disk-based data store to the semiconductor-based data store.

26. A consumer electronics product, comprising:

a first storage device that stores a plurality of media items;

a user input device that enables a user of the consumer electronics product to at least select a particular media item from the plurality of media items, the particular media item having a first portion and subsequent portions, the subsequent portions being different than and not including the first portion;

an output device for playing back the particular media item;

a second storage device capable of storing at least one of the media items, the second storage device has substantially faster access than does the first storage device; and

a processor operatively connected to the first storage device, the user input device and the second storage device, the processor causes the output device to play back the particular media item substantially immediately following the selection of the particular media item by the user without regard to whether media data for the particular media item resides in the second storage device or on the first storage device,

wherein when the media data for the particular media item is not initially stored in the second storage device, the processor concurrently activates the first storage device and retrieves and plays a first portion of the media data directly from the first storage device while substantially concurrently initiating background loading subsequent portions of the media data for the particular media item from the first storage device into the second storage device, and

wherein once substantially all the subsequent portions of the media data for the particular media items are available in the second storage device due to the background loading of the subsequent portions of the media data for the particular media item, the processor de-activates the first storage device when the consumer electronic product is battery powered thereby substantially reducing power consumption of the consumer electronic product and retrieves the subsequent portions of the media data for the particular media item from the second storage device

27. A consumer electronics product as recited in claim 26, wherein at least a portion of the loading of the media data from the first storage device to the second storage device is performed concurrently with the playing of the first portion of the media data.

28. A consumer electronics product as recited in claim 26, wherein the consumer electronics product further comprises:

a display screen operatively connected to the processor, the display screen displays a list of the media items.

29. A consumer electronics product as recited in claim 28, wherein the consumer electronics products is a portable, battery powered media player.

30. A consumer electronics product as recited in claim 26, wherein the consumer electronics product is a handheld media player.

31. A consumer electronics product as recited in claim 30, wherein the first storage device of the handheld media player stores a plurality of media items, and wherein the handheld media player comprises an audio player, and wherein the media items include at least audio files of songs.

32. A consumer electronics product as recited in claim 31, wherein at least a portion of the loading of the media data from the first storage device to the second storage device is performed concurrently with the playing of the first portion of the media data.

33. A consumer electronics product as recited in claim 26, wherein the first storage device of the consumer electronics product stores a plurality of media items, and wherein the consumer electronics product comprises a video player, and wherein the media items include at least video files of videos.

34. A consumer electronics product as recited in claim 33, wherein the consumer electronics product is a handheld media player.

35. A consumer electronics product as recited in claim 26, wherein the first storage device is a disk-based storage device and wherein the second storage device is a semiconductor-based storage device.

* * * * *