Aug. 5, 1958 D. R. GARDNER 2,846,116

APPARATUS FOR FEEDING BOXES

Filed Feb. 2, 1955 2 Sheets-Sheet 1

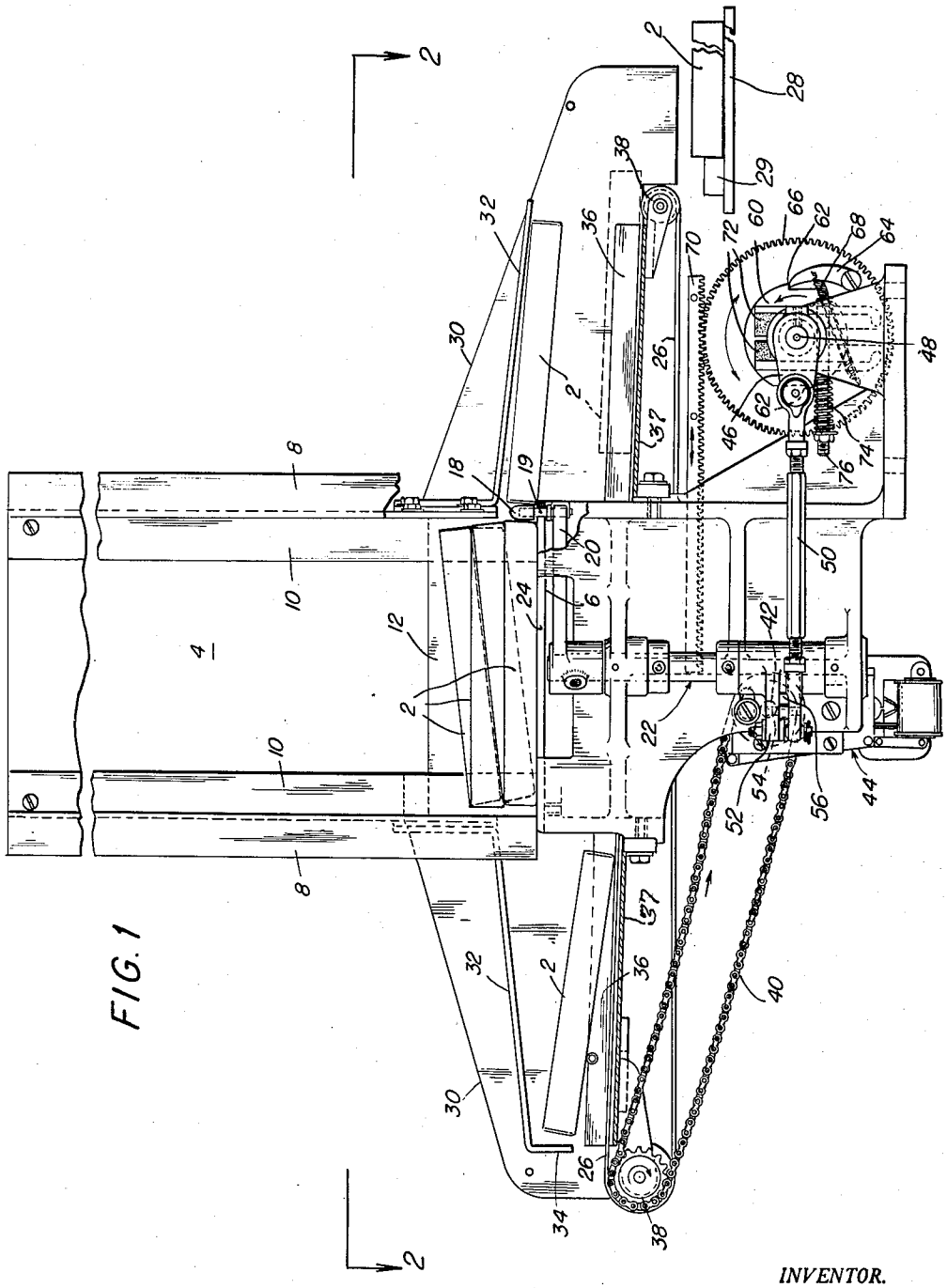

FIG. 1

INVENTOR.
Dwight R. Gardner
BY
Churchill Gale Wigmouth & Engel
Attorneys

Aug. 5, 1958 D. R. GARDNER 2,846,116

APPARATUS FOR FEEDING BOXES

Filed Feb. 2, 1955 2 Sheets-Sheet 2

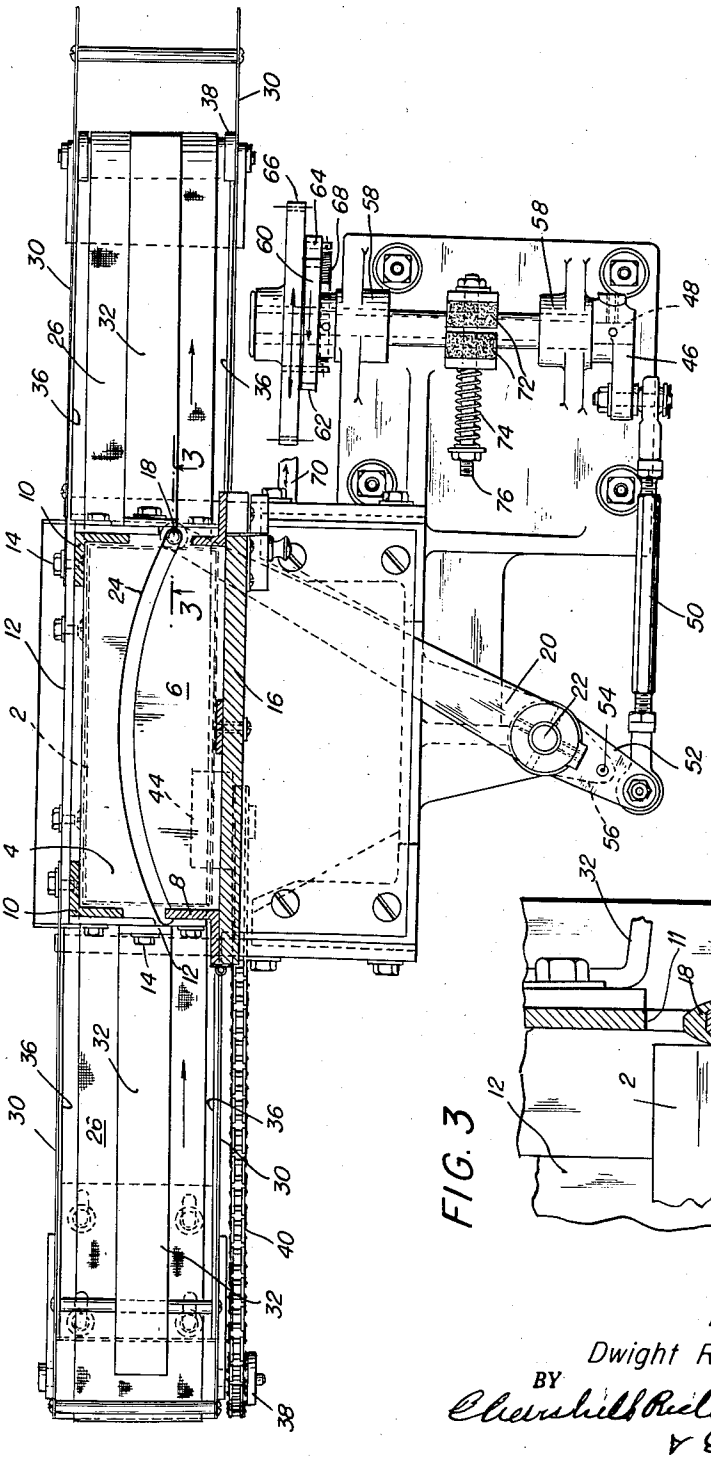

FIG. 2

FIG. 3

INVENTOR.
Dwight R. Gardner
BY
Cleveland Reid & Reynolds & Engel
Attorneys

United States Patent Office 2,846,116 Patented Aug. 5, 1958

2,846,116

APPARATUS FOR FEEDING BOXES

Dwight R. Gardner, Holyoke, Mass., assignor to The American Thread Company, New York, N. Y., a corporation of New Jersey

Application February 2, 1955, Serial No. 485,779

2 Claims. (Cl. 221—67)

The present invention relates to apparatus for feeding boxes from a magazine and delivering them to a box filling machine, or for other purposes.

Certain machines for making cardboard boxes having open tops deliver the boxes therefrom arranged in stacked relation with their ends telescoping alternately, the flexibility of the sides of the boxes permitting such telescoping of their ends. One of the objects of the present invention is to provide an apparatus having a magazine adapted to receive the boxes thus arranged, and means for successively disengaging the boxes from each other and feeding them from the magazine.

Another of the objects of the invention is to provide novel and improved apparatus for feeding boxes from a magazine and delivering them to a box filling machine, or for other purposes.

The several features of the invention, whereby these and other objects may be attained, will be readily understood from the following description and accompanying drawings, in which:

Figure 1 is a side view, partly in section and with certain parts broken away, of an apparatus embodying the features of the invention in their preferred form;

Fig. 2 is a sectional plan view, taken substantially on the line 2—2 of Fig. 1; and

Fig. 3 is a detailed sectional view, on an enlarged scale, taken on the line 3—3 of Fig. 2.

The apparatus illustrated in the drawing is particularly adapted for feeding cartons or boxes 2 of the type having open tops, such as small cardboard boxes commonly used for embroidery skeins and other articles.

The boxes as shown and as they come from certain box-making machines above referred to are arranged in a stack with their ends telescoping alternately as shown in Fig. 1, the stack being placed in a magazine 4. This magazine comprises a bottom wall or plate 6 on which the stack rests, and two pairs of vertical angle irons 8 and 10 which project upwardly from the plate, and are secured together by suitably arranged braces 12 to which the angle irons are secured by bolts 14. The front of the magazine may be closed by a door 16, the door being removed in Fig. 1 for clarity.

The lower ends of one side of each of the angle irons 8 and 10 are cut away as shown at 11, Fig. 3, to provide openings at both the left and right hand sides of the magazine of suitable size to permit the boxes in the stack to be fed from the bottom plate of the magazine either to the right or left.

The boxes are adapted to be thus fed from the magazine, by means of a pusher 18 which is in the form of a cylindrical cap and is secured on the upper end of a pin 19 secured to the free end of a lever 20 which has its other end secured on a rock shaft 22. The pin 19 below the pusher extends upwardly through a clearance slot 24 in the bottom plate 6 of the magazine, the slot being concentric with the axis of the shaft 22.

With this construction, it will be apparent that upon oscillating movement of the lever 20, the pusher 18 may

engage the untelescoped end of the box at the bottom of the stack, as shown in Fig. 1, and push it toward the left and from the magazine. As this occurs, the upper edge of said untelescoped end, by engagement with the bottom of the overlying box, raises the latter out of telescoping engagement with the bottom box, and, when the box is discharged, the stack drops down upon the bottom plate. Upon the return movement of the pusher 18, it engages the untelescoped end of the next box and pushes this box from the magazine from left to right in the opposite direction from which the preceding bottom box was discharged. Thus the boxes, although nested or telescopingly arranged as described, are uniformly discharged alternately from opposite sides of the magazine.

As the boxes are thus discharged left or right from the magazine, they drop downwardly upon the upper run of a belt conveyor 26 which conveys them in spaced relation and delivers them to a track 28 or other guiding means over which they may be fed by a pusher 29 or other means to the box feeding devices of a box filling machine, for example the box feeding devices of the machine of the patent to Standish, No. 2,331,004, dated October 4, 1943.

The boxes are guided as they leave the magazine by side plates 30 between which the boxes pass and by guiding members 32 beneath which the boxes pass to the conveyor 26, the left hand guiding member 32 having a depending portion 34 for limiting the distance that the boxes may be ejected to the left as they are discharged from the left hand side of the magazine. Thus the boxes are received on the conveyor in proper spaced positions and in alinement. The boxes are further guided as they are carried by the conveyor by means of guide rails 36 adjacent the edges of the upper run of the conveyor, these rails projecting upwardly from the longitudinal edges of supporting plates 37.

The belt conveyor 26 passes over pulleys 38 mounted on shafts journaled in bearings on brackets secured to the plates 37. The left hand pulley shaft is driven through a sprocket chain 40 which passes over sprocket wheels on said shaft and on a shaft 42 which may be driven by an electric motor indicated at 44.

The rock shaft 22 is oscillated to operate the pusher 18 from a crank 46 secured on the end of a shaft 48. This crank is connected by an adjustable rod 50 to an arm 52 that is secured by a shearing pin 54 to an arm 56 secured on the shaft 22.

The shaft 48 is journaled in bearings 58, and has secured on the rear portion thereof a ratchet wheel 60. This ratchet wheel is provided with two teeth 62 arranged diametrically opposite each other and adapted to be successively engaged by a pawl 64 pivotally mounted on a gear 66 that is loosely mounted on the shaft 48. The pawl 64 is held against the surface of the ratchet wheel 60 by means of a coiled tension spring 68. The gear 66 is operatively engaged by a rack 70. To prevent over-running of the shaft 48, split brake shoes 72 engage the shaft, the shoes being pressed together by means of an adjustable compression spring 74 on a bolt 76.

The rack 70 may be operatively connected with the pusher or other box feeding mechanism of the box filling machine through any suitable means (not shown).

Upon movement of the rack 70 toward the right, the gear 66 is rotated 180 degrees in a clockwise direction, thus carrying the pawl 64, 180 degrees around the ratchet wheel 60 to position it in engagement with its other tooth 62. During the movement of the rack 70 toward the left, the gear 66 is rotated 180 degrees in the opposite direction, or counterclockwise. During this movement, the pawl 64, through the ratchet wheel, rotates the shaft 48 in a counterclockwise direction 180 degrees, thus moving the pusher 18 from the position shown in Fig. 2 to

the left-hand end of the slot 24, thus pushing the bottom box of the stack to the left from the magazine.

During the next movement of the rack 70, toward the right, the gear 66 carries the pawl 64 into position to engage the opposite tooth of the ratchet wheel 60. Thus, upon the next movement of the rack 70 toward the left, the ratchet wheel 60 is again rotated 180 degrees in a counter-clockwise direction as before, and thus the pusher 18 is returned to the position shown in Fig. 2 During such movement, the bottommost box in the stack is discharged from the right-hand side of the magazine.

It will be noted that by operating the pusher and the conveyor 26 in timed relation the boxes may be conveyed by and pass from the conveyor at any desired predetermined timed and spaced relation, and at any desired speed to meet the requirements of the box filling machine, or for other purposes.

It will be apparent that with the apparatus and in accordance with the method described, the boxes stacked with their ends telescoping as they come from the box-making machine, are uniformly discharged from opposite sides of the magazine and conveyed to the filling machine, and their is no danger of the boxes jamming or becoming disarranged in the magazine or as they are conveyed. Thus restacking of the boxes in the magazine is unnecessary, and substantially twice the number of boxes may be placed in the magazine than is possible with unnested boxes. It will also be apparent that an important feature of the invention is the successive feeding of the boxes in such a manner that each box as it is fed, by sliding engagement with the adjacent box, disengages itself from telescoping engagement with the latter box, and thus the feeding of each box is effected without disarranging the other boxes in the stack. Instead of feeding the boxes from the bottom of the stack as described, it will be apparent that they may be similarly fed from the top of a stack if desired.

What I claim is:

1. An apparatus for automatically and successively ejecting boxes in opposite directions from a stacked series comprising a substantially vertical magazine for receiving boxes having open tops, said boxes being arranged in a stack in said magazine with their ends telescoping alternately, said magazine having oppositely disposed side openings adjacent the bottom thereof through which individual boxes may be ejected from said stacked series, a pusher adapted to be oscillated to engage on alternate sides of the magazine the untelescoped ends of the boxes and to successively eject the boxes in opposite directions from the magazine through the openings therein, and means for oscillating said pusher including a reciprocating rack, a gear operatively engaged by said rack whereby said gear is oscillated during the reciprocation of said rack, a shaft on which said gear is rotatively mounted, a ratchet wheel secured on said shaft adjacent one side of said gear, said wheel having diametrically disposed ratchet teeth, a spring pressed pawl pivotally mounted on the side of said gear adjacent said wheel and adapted to engage the teeth on said ratchet wheel whereby during successive oscillation of the gear the pawl alternately engages the teeth of the ratchet wheel to effect rotation of said shaft in one direction, a crank secured on said shaft, a lever having said pusher mounted on one end thereof, a rock shaft having secured thereto the other end of said lever, connections between said crank and said rock shaft to effect oscillation of said rock shaft, lever and pusher in opposite directions whereby said pusher successively ejects boxes from said magazine through the oppositely disposed openings in said magazine.

2. An apparatus for automatically and successively ejecting boxes in opposite directions from a stacked series comprising a substantially vertical magazine for receiving boxes having open tops, said boxes being arranged in a stack in said magazine with their ends telescoping alternately, said magazine having a base plate for supporting said stack of boxes, said magazine having oppositely disposed side openings adjacent the base plate through which individual boxes may be ejected from said stacked series, a pusher adapted to be oscillated to engage on alternate sides of the magazine the untelescoped ends of the boxes and to successively eject the boxes in opposite directions from the magazine through the openings therein, and means for oscillating said pusher including a reciprocating rack, a gear operatively engaged by said rack whereby said gear is oscillated during the reciprocation of said rack, a shaft on which said gear is rotatively mounted, a ratchet wheel secured on said shaft adjacent one side of said gear, said wheel having diametrically disposed ratchet teeth, a spring pressed pawl pivotally mounted on the side of said gear adjacent said wheel and adapted to engage the teeth on said ratchet wheel whereby during successive oscillation of the gear the pawl alternately engages the teeth of the ratchet wheel to effect rotation of said shaft in one direction, a crank secured on said shaft, a lever having said pusher mounted on one end thereof, a rock shaft having secured thereto the other end of said lever, the base plate of said magazine having a slot therein concentric with said rock shaft, said pusher extending through said slot into said magazine for engagement with the untelescoped ends of said boxes, connections between said crank and said rock shaft to effect oscillation of said rock shaft, lever and pusher in opposite directions whereby said pusher during its movement in said slot successively ejects boxes from said magazine through the oppositely disposed openings in said magazine.

References Cited in the file of this patent

UNITED STATES PATENTS

1,133,143	Hogan	Mar. 23, 1915
1,538,851	Goss	May 19, 1925
1,943,444	Knowlton	Jan. 16, 1934
2,188,759	Redd	Jan. 30, 1940
2,253,793	Leimer	Aug 26, 1941
2,280,218	Cook	Apr. 21, 1942
2,539,652	Amberg et al.	Jan. 30, 1951

FOREIGN PATENTS

184,064	Switzerland	Dec. 16, 1936