(No Model.)

M. PICKETT.

BED SLAT.

No. 596,684. Patented Jan. 4, 1898.

Fig. 1.

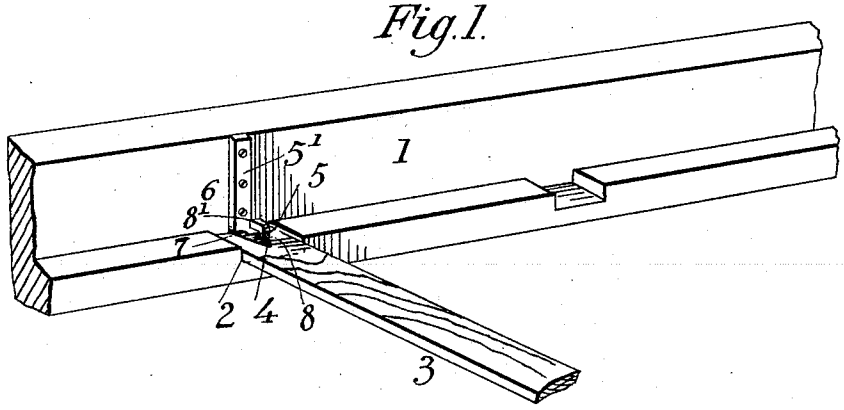

Fig. 2.

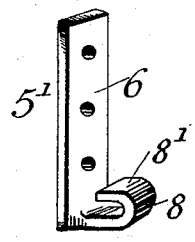

Fig. 3.

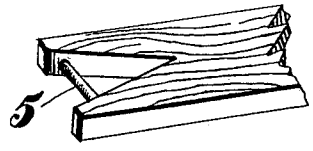

WITNESSES
J. L. Bowen.
C. D. Kesler.

INVENTOR:
Mollie Pickett,
By John Medderburn.
Attorney

THE NORRIS PETERS CO., PHOTO-LITHO., WASHINGTON, D. C.

UNITED STATES PATENT OFFICE.

MOLLIE PICKETT, OF ROBY, TEXAS, ASSIGNOR OF ONE-HALF TO JAMES W. BARNETT, OF SAME PLACE.

BED-SLAT.

SPECIFICATION forming part of Letters Patent No. 596,684, dated January 4, 1898.

Application filed January 7, 1897. Serial No. 618,287. (No model.)

To all whom it may concern:

Be it known that I, MOLLIE PICKETT, a citizen of the United States, residing at Roby, in the county of Fisher and State of Texas, have invented certain new and useful Improvements in Bed-Slats; and I do hereby declare the following to be a full, clear, and exact description of the invention, such as will enable others skilled in the art to which it appertains to make and use the same.

My invention relates to bed-slats.

My object is the provision of a novel form of bed-slat and connection for fastening the same to the side rails of the bed, so that all tendency of said side rails to spring laterally or to become detached upwardly will be obviated and a strong brace provided.

Having this object in view, the invention consists of a bed-slat and fastening therefor comprising certain novel features and combinations of parts appearing more fully hereinafter.

In the accompanying drawings, Figure 1 is a perspective view showing one of my improved slats and disclosing how the same is fastened to the side rail of the bed; Fig. 2, a detail view of the hook, and Fig. 3 a similar view of the end of the slat.

The numeral 1 designates a side rail of the bed, which is provided with the notches 2 to receive the ends of the slats. It is only necessary to employ one of my improved slats in connection with a bed and all the remaining slats may be of the ordinary type. The slat 3 has its end notched, as at 4.

The numeral 5 designates a rod which is passed through the end of the slat transversely thereof and across the notch.

The numeral 5′ designates my improved hook, the same comprising an elongated portion 6, screwed or nailed to the side rail in a vertical position, a horizontal portion 7, which lies in the notch 2 of the rail, and an upwardly-extending portion 8, provided with an inturned end 8′. When in position, the end of the slat lies in the notch 2, and the portion 8 of the hook is passed up through the notch in the slat, so that the parts 8 and 8′ of the rod prevents the slat and hook from becoming detached either laterally or upwardly unless said slat is manipulated by hand.

The device is extremely simple and cheap and well adapted to prevent the side rails of the bed from springing outwardly, while it in no manner interferes with the bedding.

Having thus described my invention, what I claim as new, and desire to secure by Letters Patent, is—

The combination with a side rail of a bed, of a slat having a notched end adapted to rest on said side rail, a horizontally-disposed rod secured to the slat inwardly from the end thereof and extending across the notch in the same, and a fastener comprising a vertically-disposed base portion connected to the side rail, a lower outwardly-extending horizontal portion, resting on the ledge of the side rail and a second upwardly-extending portion disposed away from the side rail and provided with an upper bent end which extends toward the side rail, the hook thus formed being adapted for reception in the notch of the slat to receive the rod between the lower and upper horizontally-extending portions.

In testimony whereof I have signed this specification in the presence of two subscribing witnesses.

MOLLIE PICKETT.

Witnesses:
W. C. BREEDLOVE,
GEO. W. BREEDLOVE.