L. H. BOCH.

CARRIER FOR VALUABLES.

APPLICATION FILED JUNE 21, 1915.

1,184,311.

Patented May 23, 1916.

Fig. 1

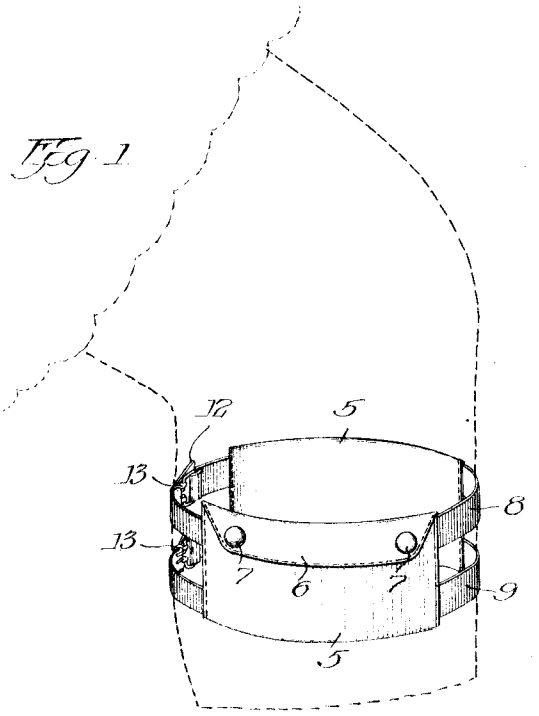

Fig. 3

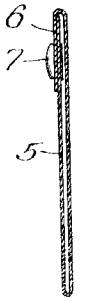

Fig. 2

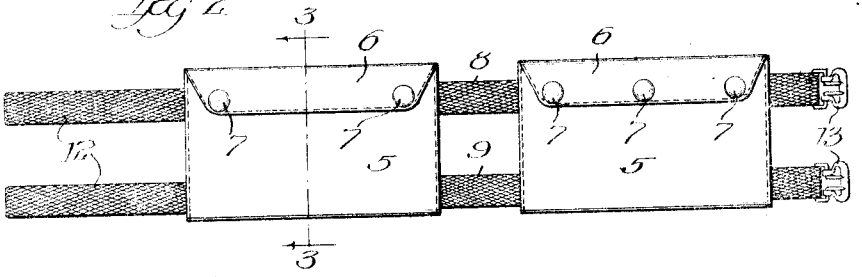

Fig. 4

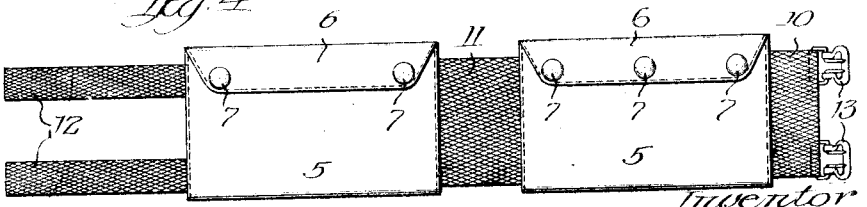

Witnesses:

F. G. Dawson

C. H. Roessner.

Inventor

Louise H. Boch

By

Atty.

UNITED STATES PATENT OFFICE.

LOUISE H. BOCH, OF CHICAGO, ILLINOIS.

CARRIER FOR VALUABLES.

1,184,311. Specification of Letters Patent. Patented May 23, 1916.

Application filed June 21, 1915. Serial No. 35,295.

To all whom it may concern:

Be it known that I, LOUISE H. BOCH, a citizen of the United States, and resident of Chicago, in the county of Cook and State of Illinois, have invented certain new and useful Improvements in Carriers for Valuables, of which the following is a specification.

This invention has for its object to provide for a convenient carrier for valuables of a type which is intended to be secured around the lower limb, preferably between the calf of the leg and the knee joint. Devices of this general character have been used but they have certain disadvantages which it is the purpose of my invention to overcome.

The prime requirements in an article of this class are, of course, that it shall afford sufficient space for the carriage of money or jewelry or small articles of this sort, which shall be comfortable to the wearer, easily accessible and which shall not present any unsightly protuberances or be observable when worn under thin or clinging garments.

A further purpose of the invention is the provision of a receptacle having a closing flap, the walls of the receptacle and the said closing flap being so related as to be subjected to tension by the attaching tapes, whereby such parts are held in such close relation as to effectually seal the opening or mouth of the receptacle and prevent any play or movement of the contents of the receptacle.

With these ends in view, the invention consists of a receptacle having an opening along its upper edge, a flap for closing the opening, means for fastening the flap at or near its ends, and an attaching tape secured to the upper corners of the receptacle about in line with the opening or mouth thereof and about in line with the closing flap, to insure a tension being placed upon both walls of the receptacle and the closing flap, whereby such parts are pressed together.

The invention also consists of duplicate receptacles which may be counterparts of each other and which each preferably consists of a single pocket closed by a flap having suitable fastening appliances, the receptacles being desirably of such length only that they may rest upon opposite sides of the leg over the fleshy parts, the two receptacles being separated from each other so that they do not either impinge on the bony part of the leg on the front or pinch the flesh at the back of the leg. In order to hold these counterpart pockets or receptacles firmly and yet with sufficient yield to be comfortable to the wearer, I employ elastic straps or tapes as the fastening means and these elastic members are provided with buckles so as to adapt the device to be adjusted to the limb with sufficient grip to hold it in place. Preferably the elastic tapes or straps are arranged parallel to the longer side margins of the receptacles and near their upper and lower edges respectively, there being openings between the tapes or straps so as to avoid covering the limb unnecessarily.

In the accompanying drawings, Figure 1 shows the article in use; Fig. 2 is a plan view of the preferred embodiment; Fig. 3 is a cross section on the line 3—3 of Fig. 2, and Fig. 4 is a view similar to Fig. 3 except for a slight modification in the construction of the elastic tapes or straps.

In the drawings 5, 5, represent the bags or receptacles which may be made of silk lined with cloth or any other soft, flexible material even thin leather and provided with inclosing flaps 6 and with stud and button fastenings 7, of well known construction. The receptacles 5, 5, are connected by means of the elastic straps or tapes 8, 9, which may be of uniform width throughout and secured to the end portions of the receptacles 5, 5, by stitching them between the seams at the ends of said end portions or otherwise, or the tapes or straps may extend through the body of the receptacle between the lining and the outside or body portion. The purpose of employing duplicate straps or tapes and arranging them as shown near the longer side margins of the receptacle is to enable the receptacles to be maintained without wrinkling or folding and their arrangement avoids the coverings of the flesh unnecessarily. However, instead of the duplicate or plural number of straps, wider portions such as indicated at 10, 11, in Fig. 4 may be employed. I prefer in all instances to make the attaching ends 12, separate from each other so as to adapt them to properly engage the buckles 13. In adjusting the device upon the limb it is desirable to place the receptacles 5, 5, on the inner and outer sides of the leg and to fasten

the device at the rear the intermediate connecting elastic tapes or bands passing over the front or bust portion of the leg and serving to hold the article firmly without chafing or showing undesirable protuberances. If the receptacle on the inner side of the limb is used for small articles of jewelry, the outer may be used desirably for bills or folded papers or securities.

I am aware that single pockets have heretofore been equipped with means for attaching them around the limb of the wearer; also that hosiery or a plurality of pockets have been described, one of the pockets being placed above the knee and the other below. These devices are uncomfortable in use if made of any efficient capacity. By dividing the pockets, making them of counterparts, spacing them apart and arranging them in the manner shown and described, a uniform and simple device, convenient to the wearer and having sufficient storage capacity is provided.

I claim:

1. A receptacle of the character specified, comprising front and rear walls having their upper edges unattached to form an opening or mouth and a closing flap, fastening means for securing the closing flap at or near its ends to the upper corner portions of the receptacle, and attaching tapes or like means secured to the receptacle for subjecting the closing flap and the upper edge portions of the front and rear walls thereof to tension whereby such parts are held in close relation throughout their extent.

2. A receptacle of the character specified, comprising front and rear walls having their upper edges unattached to form an opening, a closing flap extending from one of the walls to fold over the other and seal the opening, fastening means between the ends of the closing flap and the wall against which it folds, and an attaching tape or like means secured to the receptacle and adapted to tension the closing flap and the upper edge portions of the front and rear walls to press such parts together.

3. A receptacle of the character specified, comprising front and rear walls having their upper edges unattached to form an opening, a closing flap extending from one of the walls to fold over the other and seal the opening, fastening means between the ends of the closing flap and the wall against which it folds, and attaching means secured to opposite ends of the receptacle for tensioning both walls and the closing flap thereof and pressing such parts together.

4. A carrier comprising a plurality of like receptacles, each consisting of front and rear walls having their upper edge portions unattached to form an opening, a closing flap extending from one of the walls to fold over the other and seal the opening, fastening means between the ends of the closing flaps and the walls against which they fold, and attaching tapes connecting the receptacles and secured to the ends thereof and adapted to tension the walls and the closing flaps of the receptacles and press them together.

LOUISE H. BOCH.

Witnesses:
MILTON T. MILLER,
T. D. BUTLER.