Sheet 1-4 Sheets.

W. G. Pike

Valve for Steam-Engine.

No. 73381 Patented Jan. 14, 1868.

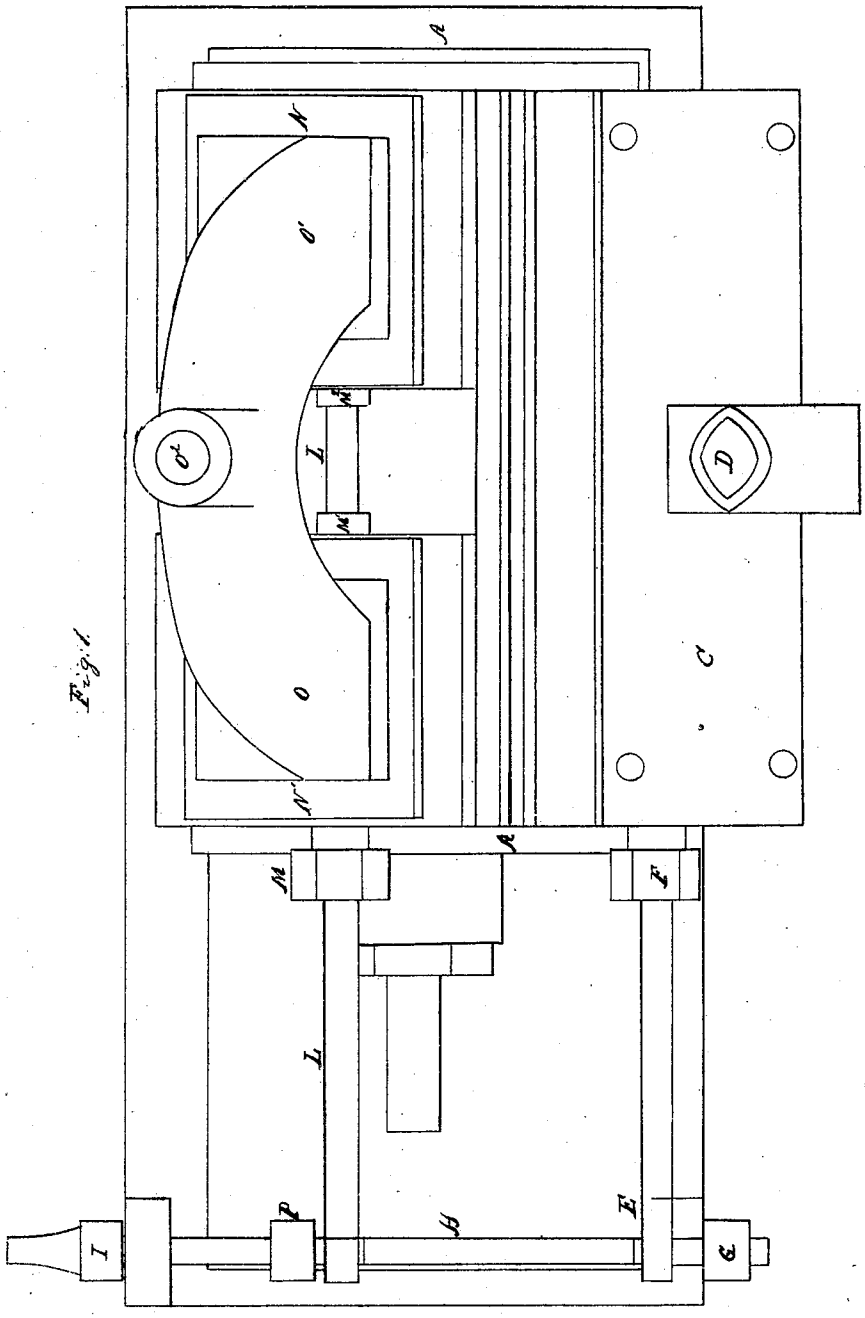

Fig. 1.

Witnesses.

W. A. A. McKinley
Geo. E. Buckley.

Inventor.

Wm. G. Pike

Sheet 2 - 4 Sheets.

W. G. Pike.

Valve for Steam-Engine.

No. 73381 Patented Jan. 14, 1868.

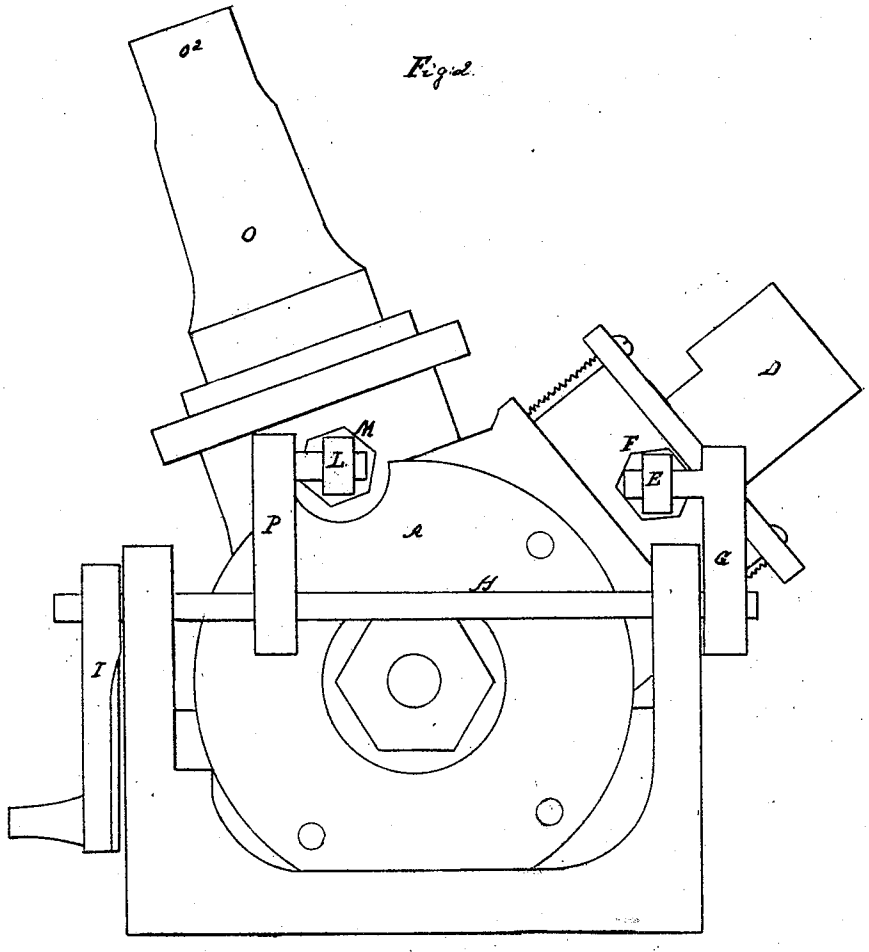

Witnesses.
W. A. A. McKinley
Geo. E. Buckley.

Inventor.
Wm. G. Pike.

W. G. Pike.

Valve for Steam-Engine.

Fig. 4.

No 73381 Patented Jan. 14, 1868.

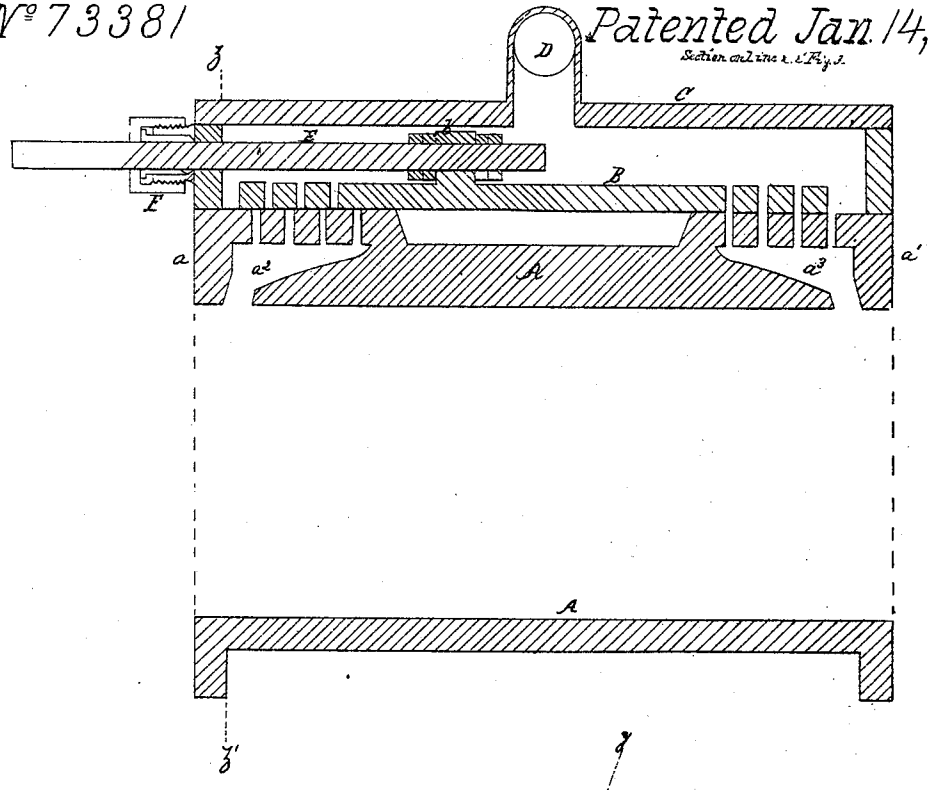

Fig. 3

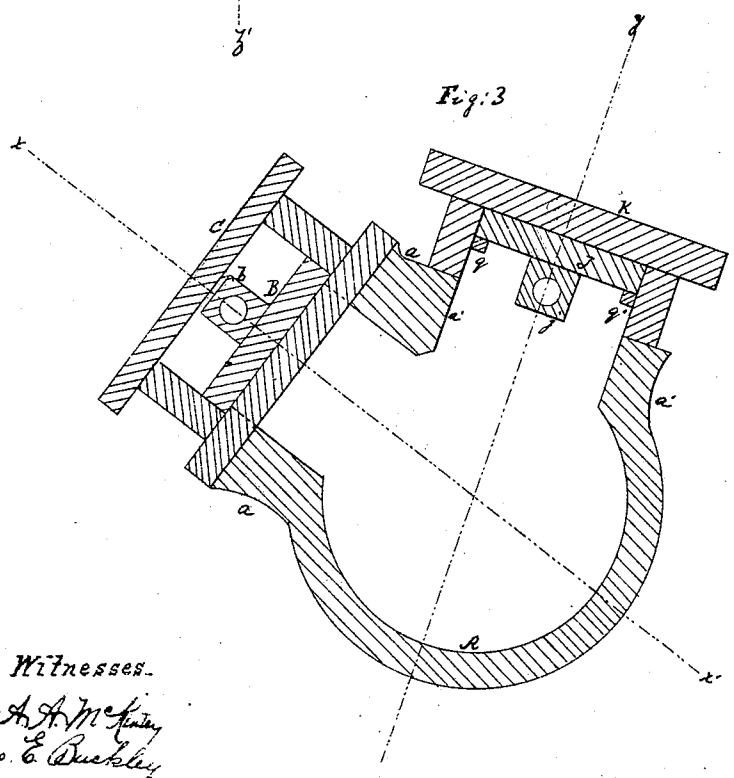

Section on line y y' Figures 4 and 5.

Witnesses.

Wm A. A. McKinley

Geo. E. Buckley

Inventor.

Wm G Pike

W. G. Pike.

Valve for Steam-Engine.

No 73381 Patented Jan. 14, 1868.

Fig. 5.

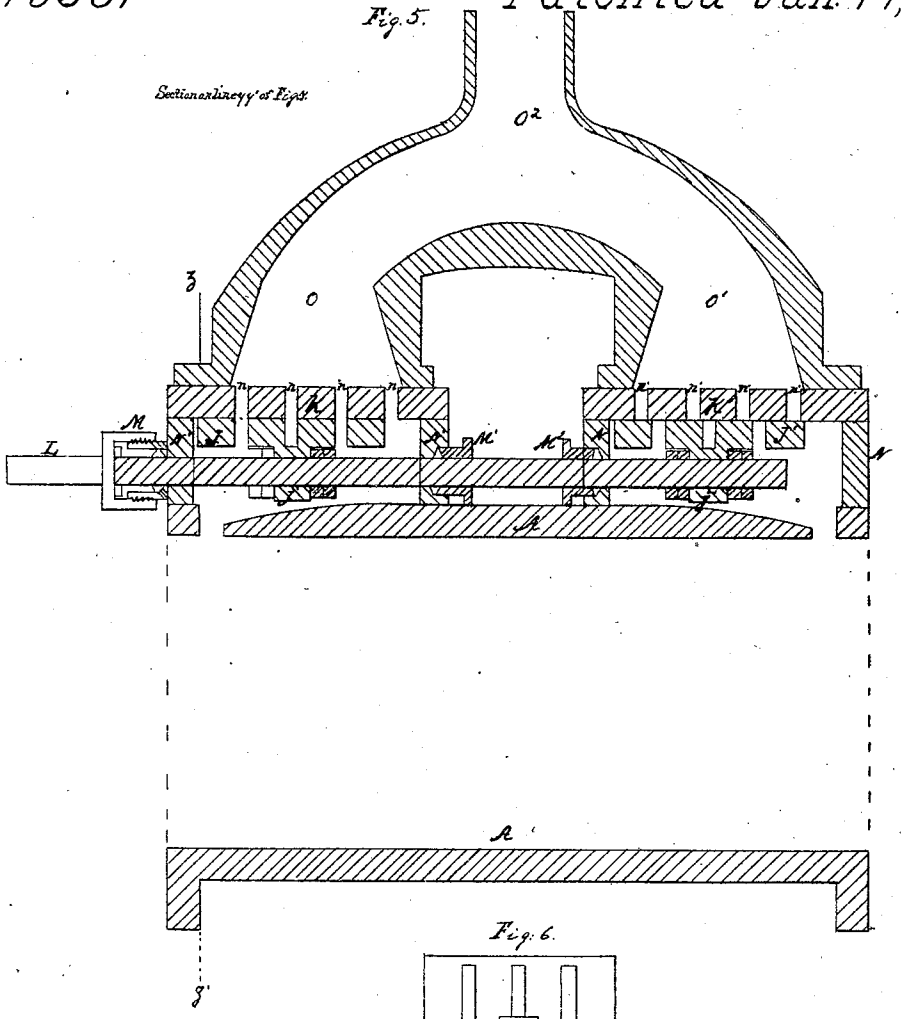

Fig. 6.

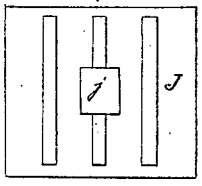

Fig. 7.

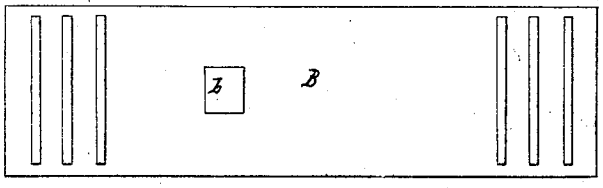

Witnesses.

W. A. A. McKinley

George E. Buckley

Inventor.

Wm. G. Pike

United States Patent Office.

WILLIAM G. PIKE, OF PHILADELPHIA, PENNSYLVANIA.

Letters Patent No. 73,381, *dated January* 14, 1868.

IMPROVEMENT IN VALVES FOR STEAM-ENGINES.

The Schedule referred to in these Letters Patent and making part of the same.

TO ALL WHOM IT MAY CONCERN:

Be it known. hat I, WILLIAM G. PIKE, of Philadelphia, Pennsylvania, have invented certain new and useful Improvements in Locomotive-Engine Cylinder-Valves; and I do hereby declare that the following is a full and exact description of the same, reference being had to the annexed drawings, forming part hereof, and to the letters marked thereon.

My invention relates to the steam-supply and exhaust-valves of locomotive steam-engines.

Ordinarily, the supply-valves of locomotives lead the crank from one-eighth to one-fourth of an inch, an arrangement which is detrimental to the working of the engine. The supply-valve should not begin to open until the crank is at the point of passing or is fully past the centre. The exhaust-valve should lead the supply-valve from one-eighth to one-fourth of an inch, in order that the piston may be free of back-pressure when the inlet steam-supply valve begins to open.

My invention consists in an arrangement of a single steam-supply chest and its valves and two independent exhaust-valve boxes and their valves and valve-stems in combination with a single eccentric and a single rock-shaft.

My arrangement provides a free escape for the exhaust steam, relieves the piston from back-pressure, and allows the supply-steam to exert its full force upon the piston when and as soon as the supply-valve begins to open. In the drawings—

Figure 1 is a top view of a cylinder such as I employ, with its piston-rod and stuffing-box, steam-supply pipe, steam-supply chest, exhaust-valve boxes, exhaust-pipe, valve-stems, rock-shaft, and rock-arms.

Figure 2 is an end view of the same.

Figure 3 is a transverse section of the cylinder, steam-chests, and valves.

Figure 4 is a longitudinal section on the line $x\ x'$ of fig. 3, showing the steam-supply chest and valves.

Figure 5 is a longitudinal section on the line $y\ y'$ of fig. 3, showing the exhaust-valve boxes and exhaust-steam pipes.

Figure 6 is a top view of either of the exhaust-valves detached.

Figure 7 is a top view of the steam-supply valves detached.

To enable others skilled in the art to make and use my improvements, I will proceed to describe them in detail, premising that similar letters are used to designate corresponding parts in the several figures.

A, figs. 3 and 4, represents the cylinder, which is cast with the flat projections $a\ a'$, fig. 3, which support the supply-steam chest and the exhaust-valve boxes. The face of the projection a forms the steam-supply valve-seat, it being provided with four ports at each end, and also with recesses a^2 and a^3, fig. 4, into which the supply-steam ports open. B is a steam-supply register-valve. C is the steam-supply chest. D is the steam-supply pipe. E is the supply-valve stem. It is attached to the lug b on the valve B by nuts and jam-nuts, as shown in fig. 4, so as to be longitudinally adjustable. F is an ordinary stuffing-box. G, fig. 2, is the rock-arm for working the valve B. H, figs. 1 and 2, is the rock-shaft to which the rock-arm G is attached. I is the rock-shaft arm. It is attached by a link (not shown) with the eccentric, (not shown.) N N', fig. 5, are the exhaust-valve boxes. K K', fig. 5, are the exhaust-valve box-covers, in which are the port-holes $n\ n'$ for the escape of the steam. J J', fig. 5, are the exhaust-valves. They are placed below the valve-box covers K K', and are held up by lugs $q\ q'$, fig. 3. The under surfaces of said covers form the seats against which the valves J J' work. M M^1 M^2 are stuffing-boxes. L is the exhaust-valve stem. It passes through lugs $j\ j'$ on the valves J J', the connection being secured by nuts and jam-nuts, as shown in fig. 5, so as to make it longitudinally adjustable. O O^1 are the exhaust-pipes. They are sufficiently large in sectional area at their mouths to cover the exhaust-ports $n\ n'$ respectively, and being united, they form the single exhaust-pipe O^2, to which the blast-pipe (not shown) may be attached. P, figs. 1 and 2, is the rock-arm, to which the exhaust-valve stem I is attached. It is rigidly attached to the rock-shaft H.

I employ register-valves, both for supply and exhaust, with a view to get a large opening into and out of the cylinder, and thus secure a rapid supply and exhaust without increasing the throw (*i. e.*, the longitudinal motion) of the valves. I make the exhaust-openings one-fourth, or, if desired, one-third larger in sectional area than the sectional area of the supply-openings. This requires the throw of the exhaust-valves to be from

one-fourth to one-third greater than the throw of the supply-valves. I obtain this greater throw of the exhaust-valves by making the rock-arm P proportionately longer than the arm G. The valves are so set that the supply-valve at one end of the cylinder, and the alternate exhaust-valve at the other end of the cylinder, are both open at the same time, the exhaust-valve leading the supply-valve one-eighth of an inch, or, if required, less. In order to insure the proper movement of the exhaust-valves, the width of the metal between the exhaust-ports should be twice the width of the port and three times the lap of the valves, it being understood that the exhaust-ports all correspond in width. This will allow the exhaust-valve to lead the supply-valve to the extent of its lap, or, if desired, less. In order to get the valves set properly for my purpose, I first set them so that the alternate supply and exhaust-valves shall open together. I then move the exhaust-valves on their stem sufficiently to give them the required lead. Instead of making the supply-valves B in one piece, they may be separate, and in this case the stem E would have to be lengthened sufficiently to operate both of such valves. The supply and exhaust-valves are all operated by one eccentric and one rock-shaft, such as are found on the locomotives in common use. My improvements may therefore be applied to such locomotives by simply supplying them with cylinders and the appurtenant parts that I have described. The rock-shaft H, as shown in the drawings, is located too near the cylinder. In practice it must be set back from the cylinder far enough to be out of the way of the cross-head, (not shown,) and also to give length to the valve-stems sufficient to compensate for the vibrations of the rock-shaft H. The exhaust-pipes, instead of leading upwards, as shown, may lead in any direction desired. Instead of employing the ledges $q\ q'$, fig. 3, to hold the exhaust-valves to their seats, the valves may have flanges formed upon them extending down to the cylinder.

Having thus described my invention, I claim, and desire to secure by Letters Patent—

1. The steam-supply chest C and supply-valves B and their stem E, in combination with the two exhaust-valve boxes N N′, exhaust-pipes O O^1, terminating in a single pipe, O^2, exhaust-valves J J′ and their stem, all arranged and operating in the manner and for the purpose substantially as set forth.

2. I claim arranging the exhaust-valves J J′ below the exhaust-valve box-covers K K′, so that said valves move upon and against the under side of said covers, substantially as set forth.

WM. G. PIKE.

Witnesses:

GEO. E. BUCKLEY,

W. A. A. MCKINLEY.