July 11, 1967 J. W. BAUR ETAL 3,330,217

PUMP

Filed July 20, 1965

Fig. 1.

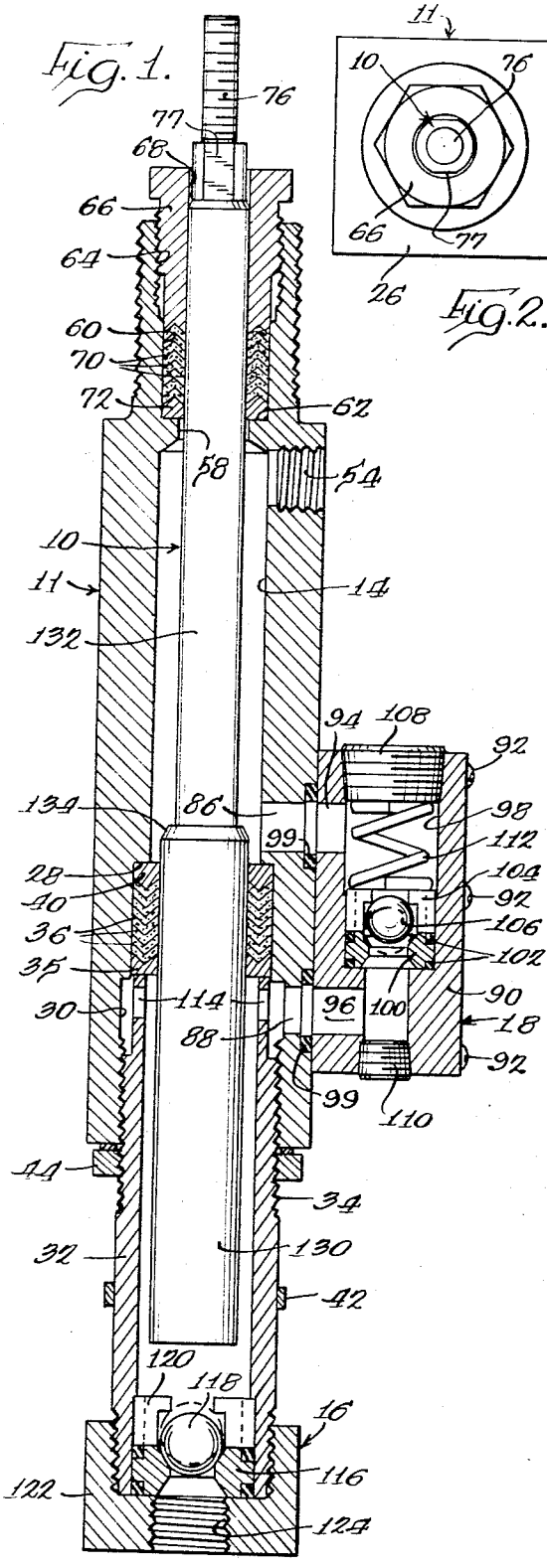

Fig. 2.

Fig. 3.

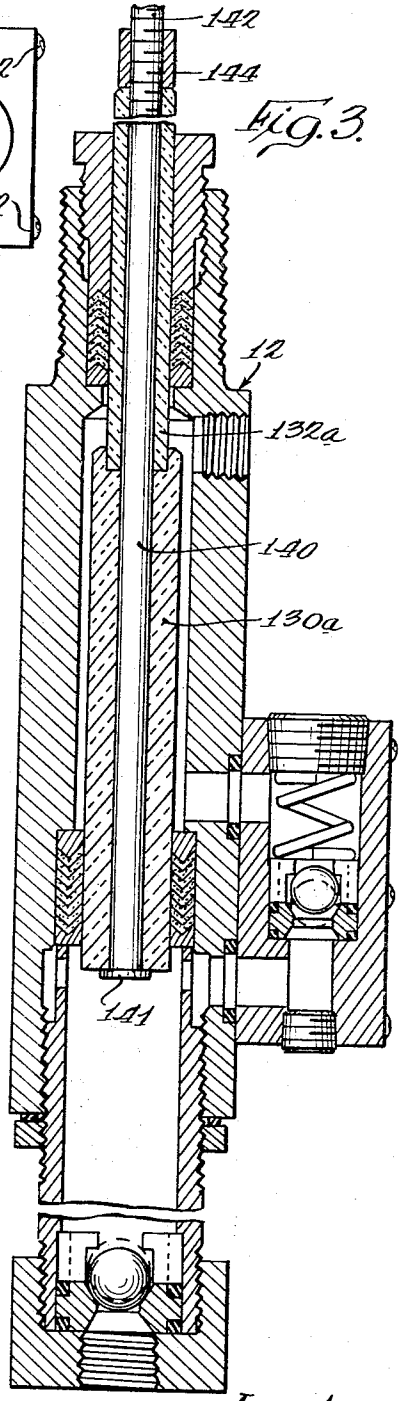

Inventors
John W. Baur
Walter M. Jones
By
Gary, Parker, Juettner & Cullinan
Attys

United States Patent Office 3,330,217
Patented July 11, 1967

3,330,217

PUMP

John W. Baur, Glenview, and Walter M. Jones, Evanston, Ill., assignors to Binks Manufacturing Company, Chicago, Ill., a corporation of Delaware

Filed July 20, 1965, Ser. No. 473,349
2 Claims. (Cl. 103—168)

The present invention relates to pumps, particularly to a pump of improved construction facilitating fabrication of pumps for corrosive and abrasive liquids, such as polyurethanes containing methyl ethyl hydroxide, and other materials of a highly corrosive and/or abrasive character.

A primary object of the invention is to provide a pump in which the piston is mounted in limited spaced relation to the cylinder walls by means of readily replaceable packings, whereby to minimize machining of the piston and cylinder and thereby to facilitate formation of the piston and the cylinder of commercially available materials highly resistant to corrosion and abrasion.

Another object of the invention is to provide an improved pump in which the piston and cylinder are unitized members without valves or ports whereby further to facilitate their formation of corrosion and abrasion resistant materials.

A further object of the invention is the provision of a pump which may readily be disassembled for repair and replacement of its constituent parts, including the piston and the cylinder.

A still further object of the invention is the provision of a pump for corrosive and/or abrasive liquids in which the piston is formed of ceramic material and in which means are provided for maintaining the ceramic material under compression.

These other objects of the invention will become apparent from the following detailed description.

Now, in order to acquaint those skilled in the art with the manner of making and using our improved pump, we shall describe, in connection with the accompanying drawings, preferred embodiments of the pump and preferred manners of making and using the same.

In the drawings, wherein like reference numerals indicate like parts;

FIGURE 1 is a vertical sectional view of a pump made in accordance with the present invention showing the piston in its down position;

FIGURE 2 is a plan view of the pump of FIGURE 1; and

FIGURE 3 is a vertical sectional view of a second embodiment of the pump showing the piston thereof in raised or up position.

Referring now to the drawings, and particularly to FIGURE 1, our improved pump is characterized by a relatively simple piston assembly **10** and a cylinder and valve assembly **11**. The assembly **11** comprises a pair of tubular members defining the pump cylinder **14**, and a pair of simplified valve structures defining an inlet valve **16** and a by-pass valve **18**.

According to an important feature of the present invention, the cylinder **14** comprises a first or upper section **26**, preferably formed from square bar stock, having a central bore and provided adjacent its lower end with a downwardly facing interior shoulder **28** and interior threads **30**, and a second or lower section **32** having, at the upper end thereof, external threads **34** for engagement with the threads **30** of the section **26**. The upper annular edge of the section **32** supports a ring **35** having an upwardly facing annular recess of V cross-section, and a plurality of chevron packing glands or rings **36** are received in the V. The section **32** may be threaded into

the section **26** to urge the rings **36** upwardly into abutment with a ring **40**, the bottom surface of which is of V shape in cross-section conformably to receive the chevron packing. The ring **40** is in turn abutted against the shoulder **28** and thus the rings **36** are compressed as the section **32** is tightened into the section **26**, the compressive force thus applied resulting in radially inward extension of the rings **36** for sealed engagement with the piston **10**. Rotation of the section **32**, if formed from tube stock, is facilitated by a spanner ring **42** having circumferentially spaced holes therein for reception of a spanner wrench. It will be appreciated that the packing rings **36** may be taken up from time to time, as required, in response to wear. A combined seal and lock nut **44** is threaded on the threads **34** and engaged with the bottom of section **26** to lock the two sections in adjusted position.

The upper end of the upper section **26** is provided with a bore **58** accommodating slidable passage of the pump piston, the bore being formed with an upwardly open counterbore **60** provided with internal threads **64** for threaded reception of a plug or gland nut **66** having a central bore **68**. The bottom edge of the nut **66** is formed with an annular recess of V cross-section for reception of chevron packing rings **70**, the bottom-most one of which rests on a metal support ring **72** whose upper surface is of V cross-section and whose bottom surface rests on shoulder **62** defined between bore **58** and counterbore **60**. The plug **66** thus forms take-up means for the sealing rings **70** to cause the same to seal about the piston **10**, in much the same manner as the sealing rings **36**.

The upper section **26** is further formed with a radial port **54** immediately below the upper seal **70**, and a pair of radial ports **86** and **88** immediately above and below the sealing means **36**. The upper port **54** comprises the pump outlet, the same preferably being threaded for reception of an outlet fitting, and the ports **86** and **88** together with the valve **18** comprise a by-pass between the two sections of the cylinder.

The valve **18** comprises a valve block **90** suitably secured to the flat side face of the section **26**, as by screws **92**. The block is provided with a pair of vertically spaced transverse bores **94** and **96** aligned respectively with the ports **86** and **88**, and a through-bore **98** interconnecting the bores **94** and **96**. O-rings **99** positioned in counterbores at the outer ends of the ports **86** and **88** effect a seal between the cylinder section **26** and the valve block **18**.

The vertical bore **98** in the valve block is stepped between the bores **94** and **96** to receive and form a stop for a valve seat **100** slidably inserted in the bore and sealed relative thereto by O-rings **102** carried by the seat. Resting on the seat is a ball retainer **104** which traps a valve ball **106** in cooperative relation wtih the seat to form therewith an upwardly opening one-way valve. Pipe plugs **108** and **110** close the upper and lower ends of the bore **98**, and a spring **112** is confined between the upper plug **108** and the retainer **104** to maintain the retainer and the valve seat in fixed positions in the bore.

The lower section **32** of the cylinder is provided adjacent its upper end with a plurality of radial bores **114** located as close as possible to the sealing means **35–36** and communicating with the port **88–96**. Preferably the upper end of section **32** is necked down and the lower end of section **26** is undercut to form an annular chamber assuring communication between the bores **114** and the port **88–96**. At its lower end, the section **32** is provided with an external thread for detachable reception of the valve **16**.

The valve **16** is comprised simply of a valve seat **116**, a valve ball **118** and a ball retainer **120** (similar, respectively, to elements **100**, **106**, **104**) and an attaching collar **122** therefor. Preferably, the lower end of the section

32 has a slight counterbore to form a shoulder or seat for the ball retainer 120, whereby to fix the assembly in the lower end of the section upon threaded attachment of the collar 122. The cylinder assembly 12, or at least the lower end portions thereof, may be directly immersed in the fluid to be pumped, or a siphon hose may be connected to the threaded bore 124 in the collar 122, whereby said bore constitutes the inlet of the pump.

The piston 10 in the FIGURE 1 embodiment of the invention may be formed of one or more members comprising a relatively large diameter lower body portion 130 spaced from the inner periphery of the housing sections 26 and 32 and slidably engaging the inner periphery of the packing rings 36, and an upper stem portion 132 of smaller diameter than the body portion 130 and defining therewith an upwardly facing shoulder 134. The portion 132 of the piston extends upwardly through the bore 58 and the bore 68 in the plug 66 in limited spaced relation thereto, the same slidably engaging the inner periphery of the packing rings 70. At its upper end, above the cylinder assembly 12, the piston is provided with a screw threaded end portion 76 and wrench flats 77 to facilitate attachment thereto of a pump operating air motor or the like.

From the position illustrated in FIGURE 1, the piston may be moved upwardly by the air motor or the other drive means therefor to cause check ball 118 to lift from the seat 116 to permit the passage of liquid into the lower end of the chamber 14 to substantially fill the volume of the chamber below the piston body 130. As the piston moves downwardly, the check valve 118 is closed and the check valve 106 is forced open by the liquid being displaced by the piston body 130, whereupon liquid flows through bores 114, ports 88 and 96, bore 98 and ports 94 and 86 into the upper portion of the cylinder 14 above the seals 36. The liquid so displaced fills the upper portion of the chamber 14 above the piston body part 130, and the remainder of the liquid discharged from beneath the part 130 on the downstroke of the piston is delivered through the outlet 54. On the next upstroke of the piston, the material or liquid in the chamber 14 above the piston part 130 will be delivered through the outlet because the check valve 106 is then closed and the upwardly advancing piston part 130 is decreasing the volume of the portion of the chamber 14 thereabove (note FIGURE 3). At the same time, the piston is causing material to be drawn into the lower end of the cylinder through the inlet 124 to repeat the cycle described.

Preferably, the piston parts 130 and 132 are so dimensioned relative to one another and the cylinder that one-half of the material drawn into the lower end of the cylinder on each upstroke of the piston is delivered through the outlet 54 on the next downstroke of the piston and the other half thereof is delivered through the outlet on the next upstroke of the piston. This is most readily accomplished by making the stem part 132 of the piston one-half the cross-sectional area of the body part 130. A specific example is as follows:

Cylinder	Length 11 3/16 inches.
Cylinder section 32	Inner diameter 1.75 inches.
Cylinder section 26	Inner diameter 2.00 inches.
Piston part 130	Outer diameter 1.68 inches, length 6 9/16 inches.
Piston part 132	Outer diameter 1.187 inches, length 7 1/8 inches.
Stroke	5 inches.

With the above dimensions, the displacement of the piston part 130 on its downstroke is 11 cubic inches per stroke; and the displacement of the shoulder portion 134 of the piston (i.e., the area of part 130 minus the area of part 132 multiplied by 5) equals 5.5 cubic inches per stroke. Thus, when the piston is on its downstroke, it will discharge about 11 cubic inches of liquid from the lower part of chamber 14 into the by-pass 18. However, at the same time, the portion of chamber 14 above the piston part 130 is increasing in volume by 5.5 cubic inches, and the liquid will attempt to fill this void before discharging through the outlet. Thus, only 5.5 cubic inches remain to be delivered through the outlet. Then, on the upstroke of the piston, the chamber 14 above the piston is decreased in volume by 5.5 cubic inches, and since there is no other place for the liquid to go, it will be delivered through the outlet. Because the piston is continuously operating on this 2 to 1 ratio, the result is a substantially constant fluid output from the pump.

Important features of this invention include: First, the piston is significantly smaller than the cylinder, has clearance relative to the walls of the cylinder and engages only the relatively flexible sealing rings 36 and 70. Second, fluid is transferred from one section of the cylinder to the other via the valve 18, whereby no porting of any kind is required in the piston and the same may be solid. Third, the pump, due to the location of the parts 114, 86 and 94 and the valve 18, is completely self-purging. Fourth, the entire pump is assembled and quickly disassembled in a most expedient manner by a few screw threaded connections.

The fourth feature facilitates ready replacement and adjustment of the parts subject to wear, i.e., valves 100–106 and 116–118 and the seals 36 and 70. To adjust seals 70, it is only necessary to adjust the gland nut 66; and to replace these seals, the gland nut and the old seals are removed, new seals inserted and the nut re-applied. The seals 36 are adjusted by loosening the lock nut 44, relatively adjusting the cylinder sections 26 and 32, and retightening the nut. To replace the seals, it is only necessary to separate the sections. The balls and the seats of the valves 16 and 18 are freely exposed for replacement simply by removing the plug 108 and the collar 122, respectively. Thus, even if the pump is used with extremely abrasive and/or corrosive materials, the four components most susceptible to wear are readily adjusted and/or replaced.

Since the cylinder 14 has no metal to metal contact with the piston 10, machining required on the two is only standard machining as opposed to precision formation of complex surfaces, ports, etc. Thus, both may economically and conveniently be made of stainless steel or any other material having extremely high resistance to corrosion and/or abrasion, even though it may be a very difficult material to work or machine. It is preferred to form the cylinder section 26 of square bar stock; the necessary length being cut from the bar, necked down at its upper end to form a mounting neck, and bored, counterbored and tapped to form the various bores, ports and shoulders described. The lower section 32 may be similarly formed, or may if desired be made from commonly available stainless steel tubing of a standard diameter.

Similarly, the piston 10 has no metal to metal contact with the cylinder assembly 12, engages only the flexible seals 36 and 70 and does not require any porting, valving or the like. Thus, the piston also may economically and conveniently be made of extremely tough corrosion and abrasion resistant material, since it requires no complex or precision machining. Specifically, the piston may and preferably is solid and may, for example, be made of stainless steel or a like material. A solid rod of stainless steel may be turned or ground to define the body and stem portions 130 and 132 and the connection portions 76 and 77, or the same may be made of rods of different diameters (as required) welded or otherwise secured together in coaxial relation. In either case, the rod or rods are of standard commercially available diameters and the peripheral portions that slide through the seals 36 and 70 require only a general or standard machined or ground surface, rather than a precision surface, since the flexible seals co-operate well with a standard finish.

The piston in some instances may be subject to wear due to particularly corrosive and/or abrasive materials acting between the seals and the reciprocating piston,

but even then the seals **36** and **70** are readily adjustable and/or replaceable to compensate for the wear without detriment to the pump or its operation. In any unusual case, the piston may readily be replaced simply by removing the valve **16** and extracting the piston. In instances where the corrosive and/or abrasive action of the material is extremely severe, even more durable materials may be utilized to form the piston **10**.

Specifically, referring to FIGURE 3, we have illustrated a second embodiment of our pump wherein the piston is formed of ceramic material loaded solely in compression, whereby even ceramic material may be utilized for high pump pressures in the order of 3,000 or more pounds per square inch. The cylinder **12** is of the same construction as illustrated in FIGURES 1 and 2, and description thereof is not repeated. The piston **10**, which in essence remains of solid construction, is characterized by a relatively large, lower body section **130***a* comprising a first ceramic tube and a relatively small upper stem portion **132***a* comprising a second ceramic tube. If desired, the lower tube may be molded with an upwardly open socket guidably to receive the upper tube in coaxial relation therewith. A rod **140**, preferably of stainless steel, extends through the tubes and has a flange **141** at its lower end engaging the bottom of the lower ceramic tube and a threaded upper end **142** projecting upwardly from the tubes. A nut **144** threaded onto the upper end of the rod engages the upper end of the upper ceramic tube **132***a* and compressively preloads both tubes between the nut and the flange **141**. The result is a composite solid piston practically impervious to corrosion and abrasion.

Thus, all of the objects and the advantages of the invention have been shown herein to be attained in a convenient, economical and practical manner.

While we have shown and described what we regard to be preferred embodiments of our invention, it will be appreciated that various changes, rearrangements and modifications may be made therein without departing from the scope of the invention, as defined by the appended claims.

We claim:

1. In a reciprocating pump: a cylinder assembly consisting essentially of a first cylinder member having open ends, a second cylinder member detachably telescoped at one end thereof into one end of said first member, a first seal between said ends of said first and second members variably compressible thereby, a third cylinder member detachably telescoped at one end thereof into the opposite end of said first cylinder member, a second seal of

smaller diameter than said first seal between said ends of said first and third members variably compressible thereby, an outlet in said first member adjacent said third member, and an inlet valve detachably mounted on the other end of said second member; a by-pass comprising a body detachably secured to the side wall of said first member adjacent said one end thereof and extending to opposite sides of said first seal, said first and second members and said body having intercommunicating ports therein establishing communication between immediately opposite sides of said first seal, and a one way valve in said body accommodating fluid flow from said second member to said first member; and a stepped solid piston reciprocable in said cylinder members including a relatively large diameter piston portion extending through said first seal of a smaller diameter than and reciprocable within said first and second members, and a relatively small diameter stem portion reciprocable in said first member and extending through said second seal and said third member; said seals engaging longitudinally spaced portions of said piston and slidably guiding said piston for reciprocable movement in spaced relation to the walls of said cylinder members, said second and third members being adjustably telescoped into said first member for independent external adjustment of said seals.

2. In a reciprocating pump as set forth in claim **1**: said members, said body and said valves comprising corrosion resistant machinable materials; said piston consisting essentially of a relatively large diameter ceramic tube comprising said piston portion, a relatively small diameter ceramic tube comprising said stem portion, and a corrosion resistant tie rod extending from end to end and compressively uniting said ceramic tubes.

References Cited

UNITED STATES PATENTS

28,012	4/1860	Ramsden	103—168
302,003	7/1884	Knorp	92—258
412,942	10/1889	Babcock	103—216
756,993	4/1904	Unzicker	103—168
1,133,778	3/1915	Wrightson	92—258
1,621,142	3/1927	Vogel	103—168
1,751,350	3/1930	Moyer et al.	92—258
2,730,957	1/1956	Riede	103—153

ROBERT M. WALKER, *Primary Examiner.*

HENRY F. RADUAZO, *Examiner.*