April 17, 1934.

S. L. TENNANT

1,955,351

ROPE TWISTING TOOL

Filed Feb. 3, 1933

FIG. 1.

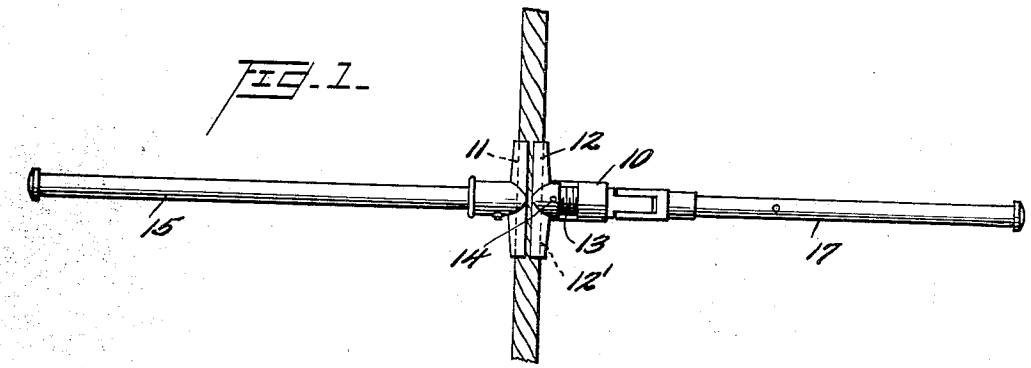

FIG. 2.

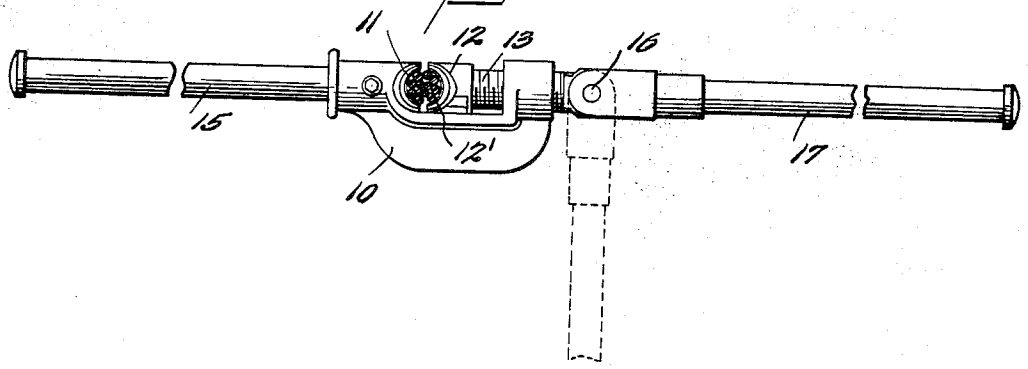

FIG. 3.

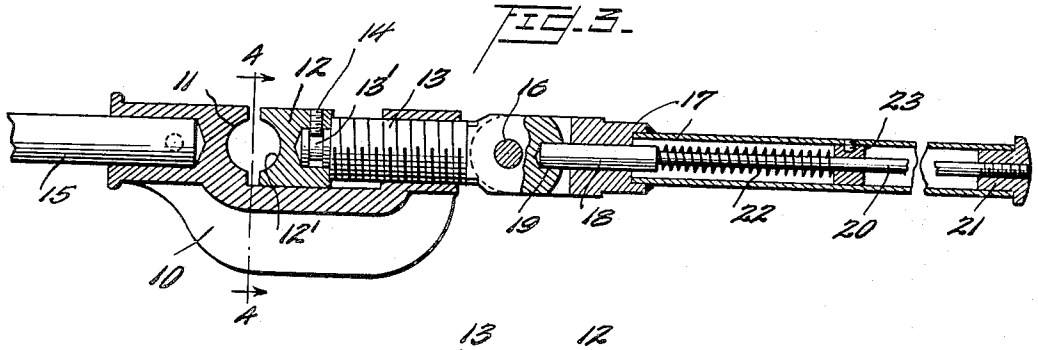

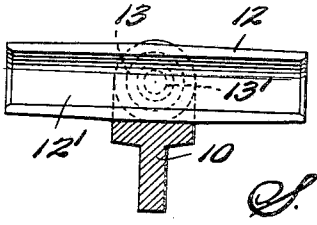

FIG. 4.

Inventor

S. L. Tennant

By Watson, Coit, Grosz & Grindle

Attorney

Patented Apr. 17, 1934 1,955,351

UNITED STATES PATENT OFFICE

1,955,351

ROPE TWISTING TOOL

Samuel L. Tennant, Elmira, N. Y., assignor to Williamsport Wire Rope Company, Williamsport, Pa., a corporation of Pennsylvania

Application February 3, 1933, Serial No. 655,111

1 Claim. (Cl. 140—149)

This invention relates to tools for twisting ropes or cables, particularly to tools for placing the necessary "back twist" in wire ropes or cables utilized in the drilling of deep wells, as for instance, oil wells.

The use of wire ropes or cables in oil well drilling has become increasingly prevalent, it having been found by oil field operators that these ropes have many advantages over the drilling rods heretofore used. The ropes or cables may be applied to and used with the well-known or standard commercial drilling rig which is provided with an oscillating beam from one end of which the rope is suspended and to the other end of which is connected mechanism for oscillating the beam about a horizontal axis, thereby vertically reciprocating the rope or cable and the drilling tool attached to the lower end of the cable.

As a step preliminary to the commencement of a drilling operation, and assuming that the rope together with the drilling tool at its lower end has been properly secured to the drilling rig, it is found necessary to impart to the rope what is commonly called "back twist"; that is, the rope is turned a number of times about its axis, at the ground level, by means of tools which are manually operated. Heretofore it has been customary to employ for this back-twisting operation pipe wrenches or the like which, while effective for the ultimate purpose of imparting back twist to the rope, have at the same time frequently so injured the rope that the period of its useful life was greatly shortened.

The present invention contemplates the provision of a tool particularly designed and intended for use in imparting "back twist" to a drilling rope or cable to any desired degree but without at the same time injuring the rope by tearing or breaking any of its component strands. In accordance with the invention, a tool is provided having relatively movable rope clamping jaws, which jaws are preferably provided with perfectly smooth cylindrical rope engaging faces adapted to engage the rope and to very tightly embrace the same over a considerable length, the rope being held by the jaws by friction only and not by toothed engagement, as in the case of the ordinary wrench or similar tool. The improved tool is provided with novel means for effecting relative movement of the jaws in clamping the rope, which means is so designed and constructed that an operator is able to easily apply the necessarily great force required to effect the proper clamping operation. The tool is likewise provided with handles by means of which the clamping jaws and the member which supports these jaws may be revolved about the axis of the rope to rotate the rope and impart to it the necessary back twist. In the preferred form of the invention illustrated by way of example, a single manually operable means or handle is utilized for effecting both the clamping action of the jaws and the revolving movement of the entire tool about the rope axis, this means comprising a handle which is movable to two or more positions. The invention may, however, be embodied in various specific forms of tools, the design and arrangement of its component elements being susceptible of considerable modification in adapting the same to various operating situations.

In the drawing:

Figure 1 is a side elevation of the tool, showing it in clamping engagement with a rope or cable;

Figure 2 is a plan view of the same, showing one of the operating handles in two different positions, one in full lines and the second in dotted lines;

Figure 3 is a section through a portion of the tool; and

Figure 4 is a section on the line 4—4 of Figure 3.

The central member of the tool comprises a yoke-like element 10 having an elongated semi-cylindrical face or groove 11 which comprises one of the rope or cable engaging surfaces. That portion of the yoke upon which the surface 11 is formed may be designated the stationary jaw of the tool. The movable jaw is indicated at 12, this jaw being advanced or retracted as desired by means of a screw 13 having threaded engagement with an interiorly threaded aperture formed in a portion of the yoke 10. Screw 13 is freely rotatable relatively to the movable jaw 12, the reduced forward axial extension 13' of the screw being received in a cylindrical recess in jaw 12 and the jaw being operatively but non-rotatably secured to extension 13' by means of a set screw 14, the inner end of which extends within a groove formed in extension 13' of the screw.

Upon rotation of the screw 13 in one direction, the movable jaw 12 will be caused to approach the stationary jaw, and when the direction of rotation of the screw is reversed, the jaws are separated. As will be observed from Figures 1 and 4, the jaws are vertically elongated above and below the yoke 10 so that the cylindrical surface 11 on the stationary jaw and cylindrical surface 12' on the movable jaw, which surfaces respectively engage the cable on opposite sides, are of considerable area, the clamping force of the tool on the rope being thus distributed over a consider-

able length of the rope so that great clamping force may be employed without subjecting any section of the rope to such great compressive force as would result in its injury.

To one end of yoke 10 is secured a handle 15 which may conveniently be a tubular member or pipe. To the end of screw 13 remote from jaw 12 is pivotally secured, as by a pivot pin 16, a second handle 17 which is likewise tubular, this handle being therefore secured to the screw for rotation in a plane normal to the axis of the pivot pin 16. Slidably fitting an axial aperture in the inner end of handle 17 is a latch bolt 18 which is adapted to enter an aperture or catch 19 formed in the outer end of the screw 13 when the handle 17 and screw 13 are in axial alignment. The latch bolt 18 may be retracted from the aperture 19, however, by the retraction of the rod 20, secured to the latch bolt and extending axially of handle 17, to its outer end, where it is provided with an operating cap or handle 21. A coiled compression spring 22, one end of which acts on the latch bolt 18 and the other end of which acts against a stationary abutment 23, normally urges the latch bolt inwardly so that, when the handle 17 is moved into co-axial relationship with screw 13, the latch bolt automatically moves into the recess 19 and locks the screw 13 and handle 17 in this co-axial relationship.

In the operation of the tool the handle 17 is first moved to the position in which it is shown in dotted lines in Figure 2 or to a position substantially at right angles to the screw 13. When in this position it serves as a screw operating handle by means of which the operator can readily rotate the screw to separate the rope engaging jaws for the purpose of admitting the rope therebetween and thereafter advancing these jaws toward each other for rope clamping purposes. It will be seen that, when the handle is turned to its dotted line position, the operator will have great leverage, enabling him to exert a very great turning force on the screw. The screw itself has great mechanical advantage also so that, by means of the handle and screw, the jaws may be caused to exert a very great clamping force upon the rope, sufficiently great in any case so that there will be no turning of the tool upon the rope in the subsequent operation of placing back twist in the rope.

After the clamping operation has been completed, the handle 17 is returned to the position in which it is shown in full lines in the drawing and locked in this position by the latch bolt 18. The entire tool can thereafter be revolved about the rope axis, turning or twisting the rope, by operators who grasp the handles 15 and 17, and the rope may be turned the desired number of times without the least danger or risk of injury by reason of the clamping action of the tool on the rope.

Having thus described the invention, what is claimed as new and desired to be secured by Letters Patent is:

A tool for twisting rope comprising a yoke having a recess to receive any intermediate portion of an elongated rope, said recess being open-sided to permit insertion of the rope thereinto and removal therefrom by relative movements of the rope and yoke laterally of the rope, opposed relatively movable rope engaging and gripping jaws in said recess, a screw having threaded engagement with the yoke and engaging one of the jaws for effecting relative movement of the jaws a handle, and means for securing the handle to the screw, said means permitting movement of the handle to a plurality of positions to facilitate manual rotation of the screw for the purpose of securing relative movement of the jaws or to facilitate body revolution of the yoke about an axis transverse to the screw to twist a rope clamped between said jaws.

SAMUEL L. TENNANT.