Nov. 20, 1923.

1,474,677

W. J. KRAUSE

HYDROCARBON BURNER

Filed Nov. 26, 1920

2 Sheets-Sheet 1

Fig. 1.

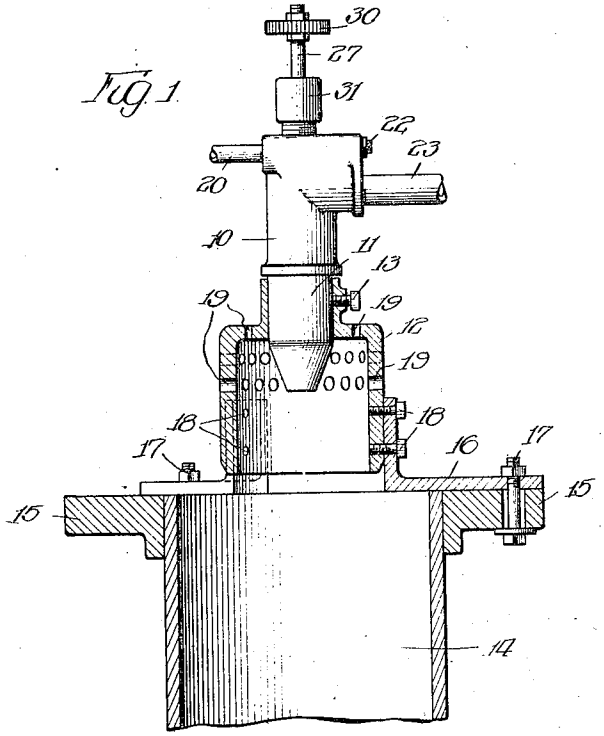


Fig. 2.

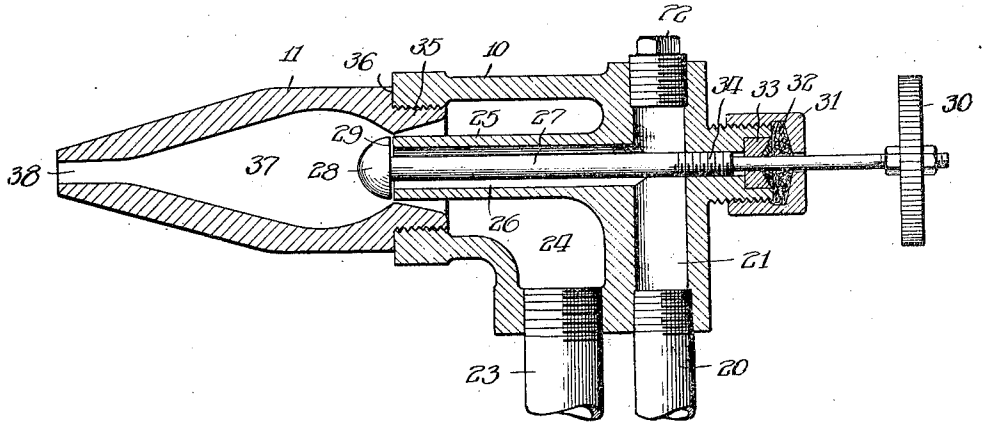


Witnesses:
R. Burkhardt.
Milton J. Miller

Inventor:
Walter J. Krause,
By R. Anthony Vanna
Atty.

Nov. 20, 1923. 1,474,677

W. J. KRAUSE

HYDROCARBON BURNER

Filed Nov. 26, 1920 2 Sheets-Sheet 2

Fig. 3.

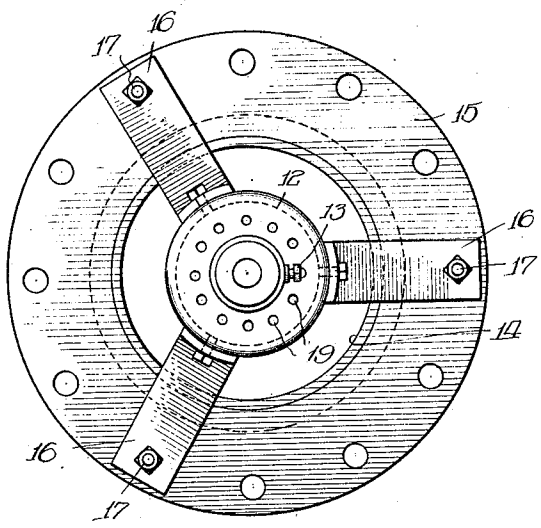


Fig. 4.

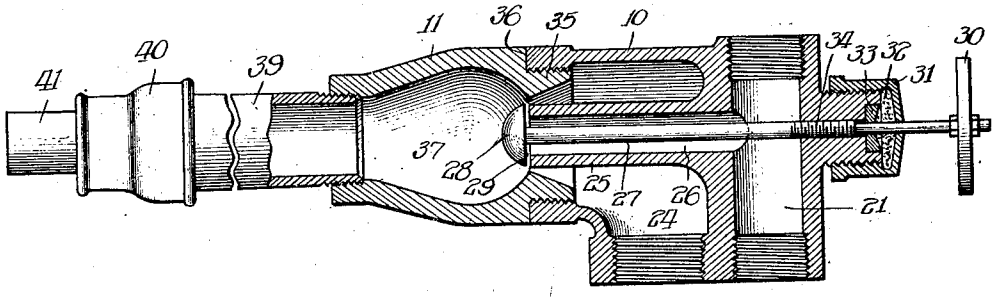


Witnesses:
C. J. Sawyer.
Milton G. Miller

Inventor:
Walter J. Krause,
By D. Anthony Uerna
Atty

Patented Nov. 20, 1923. 1,474,677

# UNITED STATES PATENT OFFICE.

WALTER J. KRAUSE, OF CHICAGO, ILLINOIS.

## HYDROCARBON BURNER.

Application filed November 26, 1920. Serial No. 426,453.

*To all whom it may concern:*

Be it known that I, WALTER J. KRAUSE, a citizen of the United States, residing at Chicago, in the county of Cook and State of Illinois, have invented certain new and useful Improvements in Hydrocarbon Burners, of which the following is a specification.

My invention relates to hydrocarbon burners and has particular reference to a burner wherein oil, tar, or other liquid fuel is atomized and mixed with air or steam, in a mixing chamber and forced outward through the nozzle of the burner into a chamber where combustion takes place.

The primary object of my invention is the provision of a burner in which oil, tar, or any other hydrocarbon or liquid fuel is thoroughly atomized and mixed with air or steam and in which the liquid fuel is admitted into the current of steam or air in a direction at right angles to the direction of travel of the steam or air so that the fuel oil or tar is sheared off by the air or steam and broken up into fine particles so that it is thoroughly atomized and mixed with the air or steam before combustion takes place.

Another and further object of my invention is the provision of a burner in which back pressure of the steam or air upon the fuel oil or tar is prevented, the fuel oil or tar being admitted into a venturi shaped nozzle having a mixing chamber therein through a hollow sleeve which extends into the nozzle to a point adjacent the throat of the nozzle so that all back pressure upon the fuel is prevented.

Another and further object of my invention is the provision of a liquid fuel burner which will thoroughly atomize tar or other heavy hydrocarbon fuels so completely that quick and better combustion takes place after the mixed fuel leaves the nozzle of the burner, thereby providing a hotter flame and a better absorption of the heat from the gases which is particularly desirable in burners used under open hearth furnaces.

A further object of my invention is the provision of a burner wherein the tar or fuel oil is spread out in the form of a circular sheet or film and is admitted into the mixing chamber around the entire periphery of the valve stem head in a direction at right angles to the direction of travel of the steam or air, thus causing all of the steam or air to pass through all of the tar or oil which passes the end of the tube or sleeve through which the fuel oil or tar is admitted to the mixing chamber, the point of admission of the fuel being also the point where the steam or air is traveling at its greatest velocity.

Another and further object of my invention is the provision of a liquid fuel burner which will successfully mix the extremely heavy hydrocarbon fuels, particularly tar, so that it can be utilized in heating purposes for open hearth furnaces, under boilers, the drying of ladles and various blast furnace operations, and through which the heavy fuels will flow freely and which will not easily become clogged up with dirt, as is common with burners having the fuel admitted thereto through needle or globe valves.

These and other objects of my invention will be more readily and better understood by those skilled in the art by reference to the accompanying drawings, and in which—

Figure 1 is a side view partially in section and partially in elevation of my improved burner secured in position to the burner cap which is attached to a pipe used for drying ladles or molds;

Figure 2 is a detailed sectional view of my improved burner;

Figure 3 is a top view of the burner and burner cap; and

Figure 4 is a view partially in section showing an elongated pipe for use in open hearth furnaces.

Referring now specifically to the drawings and particularly to Figure 1 thereof, I provide a burner head 10 to which is secured a nozzle 11 in any suitable manner. The nozzle 11 extends into and is secured to a burner cap 12 by means of a screw 13. A burner pipe 14 is provided of approximately eight inches in diameter and twelve to fifteen inches long, the said burner pipe 14 having a flange 15 extending around its upper end. A plurality of angles 16 is provided which are secured to the flange 15 by means of bolts 17 and to the burner cap 12 by means of bolts 18, 18, thus holding the burner cap 12 and burner pipe 14 together. The burner cap 12 has a plurality of holes 19, 19 therethrough adjacent the nozzle 11 through which air is admitted for purposes of combustion, and a further supply of air is pulled into the upper end of the burner pipe 14 so that complete combustion of the fuel is assured.

The burner head 10 has a fuel supply pipe

20 connected thereto and leading to a transversely extending passage 21 in said burner head 10, a plug 22 in threaded engagement with the burner head 10 serving to close the passage 21 through the burner head 10. A steam or air supply pipe 23 leading to any suitable source of supply of steam or air under pressure is provided which is connected to the burner head 10 and leads to a chamber 24 in said burner head 10. Extending through the burner head 10 is a hollow sleeve portion 25 integral with said burner head 10, the said sleeve portion 25 having a passage 26 extending longitudinally therethrough which connects with the passage 21 heretofore described. Extending longitudinally of said burner head 10 and through the passage 26 in the sleeve portion 25 is a valve stem 27 having a head portion 28 beyond the end of the sleeve portion 25, the head portion 28 having an inner face 29 extending parallel with the end of the sleeve 25 and against which the head 28 seats. The valve stem 27 has a wheel 30 on the outer end thereof, with a gland 31 in threaded engagement with the burner head 10, with the usual packing 32 and 33 therein to prevent the escape of the fuel oil around the valve stem 27. The valve stem 27 is threaded at 34 and in engagement with the burner head 10 so that the operator by turning the wheel 30 opens or closes the fuel passage 26 as may be desired.

The nozzle 11 is threaded on its inner end 35 which extends into the burner head 10 and is in threaded engagement therewith, with an annular shoulder 36 on the outside thereof which abuts against the end of the burner head 10. The nozzle 11 has an opening extending longitudinally thereof, venturi shaped at the end adjacent the burner head 10, thence being enlarged into a mixing chamber and thence converging to a passage 38 of smaller diameter and having straight inside walls at the end of the nozzle and through which the fuel is forced outward into the burner cap 12. The sleeve 25 extends into the converging portion of the opening and terminates at the restricted portion or throat thereof so that the fuel is admitted just beyond the throat of the restricted opening and at the edge of the mixing chamber 37.

It will be understood that the fuel supply pipe 20 may be secured to the burner head 10 at either end of the opening 21 and the plug 32 in that case inserted into the burner head 10 at the end opposite from which the pipe 21 enters the burner head 10. As shown in Figure 1, the pipe 20 enters the burner head 10 from the opposite side to which the steam supply pipe 23 is secured, while in Figure 2 the fuel supply pipe 20 is on the same side of the burner as the steam supply pipe 13. It will be thus understood that as the fuel oil or tar strikes against the vertical inside face 29 which extends parallel with the inner end of the sleeve 25 of the head 28 the fuel is forced outward between the end of the sleeve 25 and the head 28 and is admitted into the nozzle 11 at the throat of the opening into the nozzle 11 thus changing its direction of travel and being admitted into the current of steam passing outward over the end of the sleeve 25 cuts off the fuel which is forced outward over the head 28 into very fine particles which are then mixed thoroughly with the steam or air in the mixing chamber 37 of the nozzle, and thence outward into the burner cap 12. As the portions of fuel oil pass outward over the head 28 they are immediately delivered into the current of steam at its point of highest velocity and the passing through in the form of fuel is cut off in the form of small particles rather than being drawn outward through a tube and broken up after passing through the tube. The air necessary for combustion is supplied through the openings 19 in the burner cap 12, and a further supply of air is drawn in through the open end of the burner pipe 14 when the device is used for drying ladles or molds or in any place where the air supply is limited.

In Figure 4, I have illustrated my improved burner adapted for use in open hearth furnaces or under boilers, or in any other place where it is desired to have combustion of the fuel take place at some distance from the nozzle. The device is substantially the same as hereabove described except that the nozzle 11 has its forward end cut off and a pipe 39 inserted therein and in threaded engagement therewith and to which a reducer 40 is secured and to which a smaller pipe 41 is attached for conducting the mixture to the point of combustion over the bath in the open hearth or under boilers, as may be desired.

In operation the device is exceedingly simple, the supply of steam or air is admitted through the pipe 23 into the chamber 24 and passes outward into the nozzle 11, whereupon the hand wheel 30 is turned so as to open the space between the end of the sleeve 25 and the head 27, thus allowing the fuel oil to pass outward and become mixed with the air or steam passing through the nozzle 11. The amount of fuel oil or tar supplied can be regulated by opening or closing the valve and is to be determined by experiment consistent with the velocity of air or steam passing through the nozzle. The mixture passes outward from the nozzle, is then lighted, and the flame is thereupon thrown into a ladle for purposes of drying or, if the device is stationary, the flame is supplied under the boiler or open hearth furnace in the usual manner.

While I have described more or less precisely the details of construction, I do not wish to be understood as limiting myself thereto, as I contemplate changes in form and the proportion of parts and the substitution of equivalents as circumstances may suggest or render expedient without departing from the spirit or scope of my invention.

I claim:

1. In a hydrocarbon burner, the combination of a burner head having a high pressure fluid chamber therein and having a hollow fuel conveying conduit therethrough, a nozzle secured to the said burner head having a venturi shaped passage therein, the said fuel conveying conduit terminating at the throat of the venturi shaped passage, and means for spreading the fuel into a circular sheet and causing the fuel to pass into the current of the high pressure fluid.

2. In a hydrocarbon burner, the combination of a burner head having a high pressure fluid chamber therein and having a hollow fuel conveying conduit therethrough, a nozzle secured to said burner head having a venturi shaped passage therein, the said fuel conveying conduit discharging its contents into the venturi shaped passage at the throat thereof, and means for spreading the fuel into a circular sheet and causing the fuel to pass into the current of high pressure fluid in a direction at right angles to the direction of travel of said pressure fluid.

3. In a hydrocarbon burner comprising a burner head having a passage therethrough for conveying a high pressure fluid, the said passage having a restricted portion and having a liquid fuel conveying conduit terminating at the throat of said restricted portion, a valve stem extending through said burner head and longitudinally of said fuel conveying conduit, a head on said valve stem, the said head having a face parallel with the end of said fuel conveying conduit whereby when the valve is open fuel will be forced into the said high pressure fluid at right angles to its direction of travel.

4. In a hydrocarbon burner comprising a burner head having a passage therethrough for conveying a high pressure fluid, the said passage having a restricted portion and having a liquid fuel conveying conduit terminating at the throat of said restricted portion, a valve stem extending through said burner head and longitudinally of said fuel conveying conduit, a head on said valve stem, the said head having a face parallel with the end of said fuel conveying conduit whereby when the valve is open fuel will be forced into the said high pressure fluid at right angles to its direction of travel, and a burner cap having openings therein secured to said burner head.

Signed at Chicago, Illinois, this 20th day of November, 1920.

WALTER J. KRAUSE.