(No Model.)

F. D. GLOVER.

CAR VENTILATING WINDOW.

No. 456,561. Patented July 28, 1891.

Fig. 1.

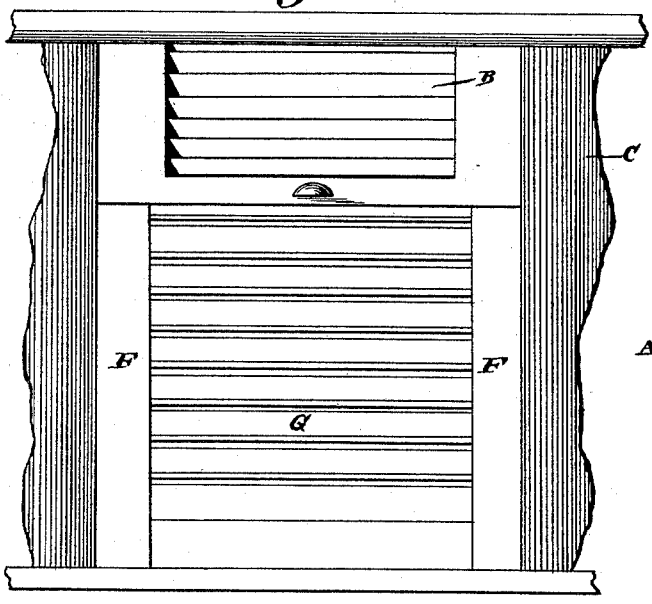

Fig. 4.

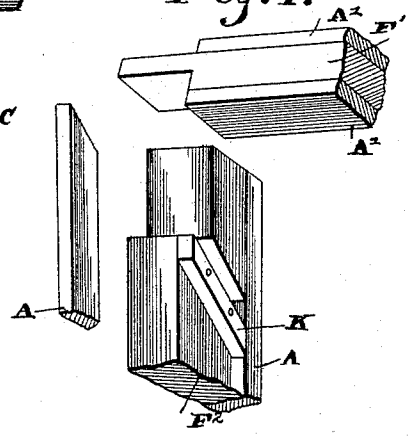

Fig. 3.

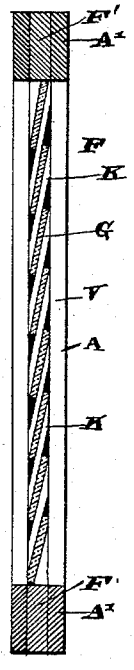

Fig. 2.

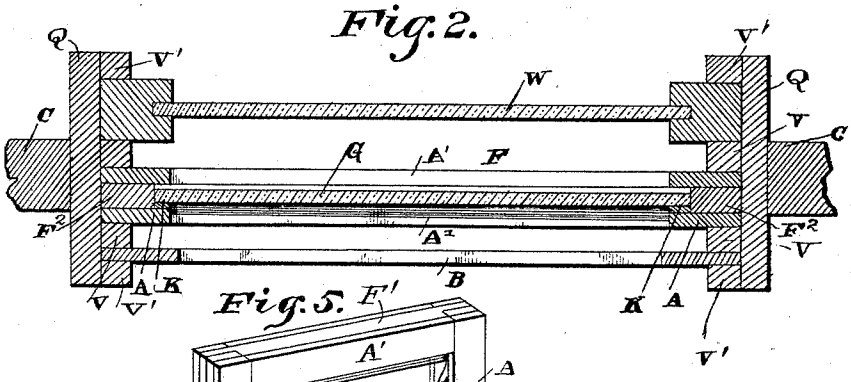

Fig. 5.

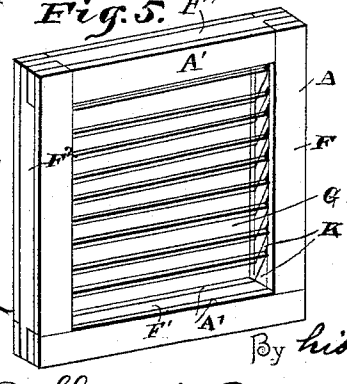

Witnesses
B. S. Ober.
N. L. Collamer.

Inventor
Fred D. Glover.

By his Attorneys,
C. A. Snow & Co.

THE NORRIS PETERS CO., PHOTO-LITHO., WASHINGTON, D. C.

UNITED STATES PATENT OFFICE.

FRED. D. GLOVER, OF CAMPBELL, MINNESOTA.

CAR-VENTILATING WINDOW.

SPECIFICATION forming part of Letters Patent No. 456,561, dated July 28, 1891.

Application filed January 29, 1891. Serial No. 379,541. (No model.)

To all whom it may concern:

Be it known that I, FRED. D. GLOVER, a citizen of the United States, residing at Campbell, in the county of Wilkin and State of Minnesota, have invented a new and useful Car-Ventilating Window, of which the following is a specification.

This invention relates to railway-cars, and more especially to the windows thereof, the object of the same being to provide an improved window which will effect the ventilation of the car, but permit the passengers to see out.

To this end the invention consists of a ventilator-window constructed as hereinafter more fully described and claimed, and as illustrated on the sheet of drawings, wherein—

Figure 1 is an inner side view of this improved window in position in the side of a car. Fig. 2 is a horizontal section through the side of a car, showing the ordinary window, the ventilator-window, and the wooden blind in section. Fig. 3 is a considerably enlarged vertical section of the ventilator-window removed from the side of the car. Fig. 4 is a perspective view of one corner of the improved ventilator-window, showing the manner in which the side bars thereof are connected. Fig. 5 is a perspective detail of this improved window on a reduced scale.

Referring to the said drawings, the letter C designates the side of a passenger-car, W the ordinary window therein, and B the ordinary wooden blind therein, all as usually constructed and as well known in the art.

Between the window and the blind the window-frame Q, is provided at its sides with two vertical strips V, which are secured to the frame by any well-known means not illustrated, while outside the window and blind are the usual beads V′. Between the strip thus formed is located my improved window, which can obviously be raised and lowered therein.

This ventilator-window is constructed as follows: F is a rectangular frame-work comprising horizontal bars F′ and vertical bars F^2, connected at their corners in any suitable manner, preferably as shown, and A′ A′ are strips secured upon both faces of the horizontal members F′ of this frame and flush with the inner edges thereof. G G are glass slats arranged horizontally and in parallel planes, with their edges slightly lapping and spaced about one-quarter of an inch, and these slats are of exactly the same length as the distance between the inner faces of the vertical members of the frame. Blocks K are arranged between these slats at their ends, and the ends of the blocks are beveled off so as to stand flush with the faces of the vertical members of the frame above mentioned. Strips A A are then secured upon the faces of the vertical members F^2 and overlap their inner edges slightly, whereby the blocks and the ends of the slats G are held in place, these strips finishing the frame and making its vertical members of the same apparent size as its horizontal members.

In operation this improved ventilator-window is placed between the vertical strips V, in which it has a vertical movement, as desired. Referring to Fig. 2 it will be seen that if the window W and blind B are open the car will be ventilated by the gentle outward flow of air between the glass slats G. At the same time the sight of the passenger will be uninterrupted and no sparks can enter the car.

Although I have shown and described this improved ventilator-window as located between the ordinary window and the blind, it will be understood that it may be used at any convenient point, and that either or both said ordinary window and blind may be omitted without departing from the spirit of my invention.

What is claimed as new is—

The herein-described car-ventilator window, the same comprising a rectangular frame, horizontal glass slats between the inner edges of the vertical members of said frame and standing in parallel planes with their edges lapping and out of contact with each other, blocks between said slats at their ends and against said inner edges, the ends of the blocks being beveled off flush with the

faces of said vertical members, strips on the faces of the horizontal members of the frame flush with their edges, and strips on the faces of the vertical members extending inwardly over said blocks and the ends of the slats and their outer faces flush with said other strips, substantially as set forth.

In testimony that I claim the foregoing as my own I have hereto affixed my signature in presence of two witnesses.

FRED. D. GLOVER.

Witnesses:

M. H. GIDDINGS,

CHAS. H. GATES.