Aug. 18, 1931. G. GÄBEL 1,819,888

SHAKER MACHINE WITH AUTOMATIC MOLD TRANSPORT FOR SHAKING DOWN CHOCOLATE OR SIMILAR MASSES IN THE MOLDS

Filed Sept. 4, 1930

Fig. 1

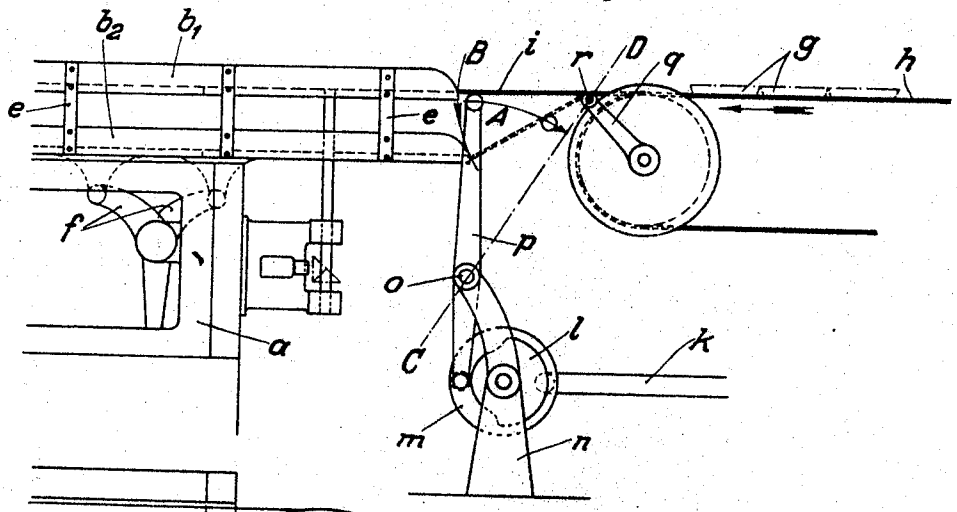

Fig. 2

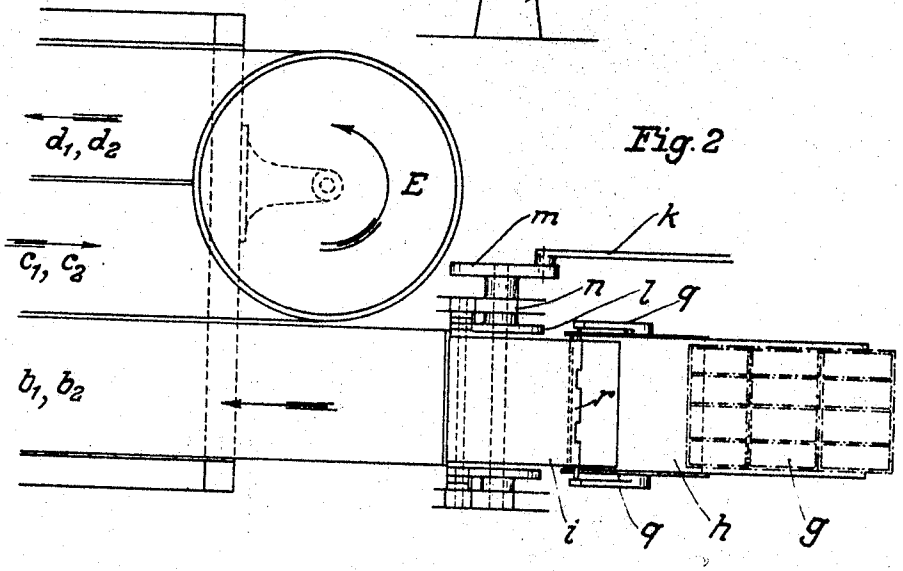

Inventor:
Georg Gäbel
BY Munn & Co
ATTORNEYS

Patented Aug. 18, 1931 1,819,888

UNITED STATES PATENT OFFICE

GEORG GÄBEL, OF DRESDEN, GERMANY

SHAKER MACHINE WITH AUTOMATIC MOLD TRANSPORT FOR SHAKING-DOWN CHOCOLATE OR SIMILAR MASSES IN THE MOLDS

Application filed September 4, 1930, Serial No. 479,754, and in Germany June 5, 1929.

Before molten chocolate fed into molds, sets to solid chocolate blocks or the like, it must be shaken for a considerable time, to enable bubbles to escape from the mass. Shaker machines constructed for this purpose have been arranged in such a way as to impart a forward movement to the chocolate blocks and agitate them simultaneously. Existing shaker machines, however, have the drawback that their out-put, in respect of the forward movement of the chocolate blocks, is greatly restricted. As a rule only 30 molds 180 mm. in length can be delivered continuously per minute. However, as the newest filling machines for feeding the chocolate mass into the molds have a considerably higher capacity than only 30 molds per minute, a single shaker machine is no longer adequate, and two such machines must be installed in order to utilize to the full the capacity of the filling machine.

According to the present invention, in order to overcome these drawbacks and double the output capacity, a shaker machine with two or more shaker tracks, superimposed in known manner, is employed together with a mold-control device by means of which the upper and lower tracks may be charged alternately. The upper shaker tracks are connected with the lower ones by means of rigid stays, and therefore partake of the shaking movements and in this way only one shaker machine is needed, instead of two.

The accompanying drawings illustrate a typical embodiment of the invention, Figure 1 being a side elevation of part of the new shaker machine, and mold-control device, and Figure 2 a plan thereof.

The shaker machine represented is of the known type, in which, in order to reduce the overall length, a plurality of shaker tracks are disposed side by side or one above another and connected together by means of a turntable such as E, so that the molds must follow a sinuous path in traversing the complete track.

The pairs of superimposed shaker tracks b_1, b_2, c_1, c_2, d_1, d_2 are mounted on a bed frame a, each of the upper tracks, b_1, c_1, d_1, being connected rigidly to the corresponding lower tracks b_2, c_2, d_2, by stays e. The lower tracks b_2, c_2, d_2 are connected with a bell-crank lever such as f, to enable an oscillating movement to be imparted to said tracks, in known manner, by actuating mechanism, not shown. Since the upper tracks b_1, c_1, d_1 are rigidly connected with the lower tracks b_2, c_2, d_2, by the stays e, they also are caused to oscillate.

The molds g pass from the filling machine (not shown) on to the belt conveyor h of that machine, which carries them along, under the filling machine to the shaker machine. In order to distribute these molds uniformly on to the upper and lower tracks, a device is provided, a typical embodiment of which will now be described with reference to the drawings.

At the point of transfer of the molds, the filling apparatus is connected with the shaker machine by a movable bridge plate i, which may also be replaced by a feed belt or the like. This connection is positively controlled synchronously with the advancing movement of the belt conveyor h, in order to transfer the full molds to the upper and lower tracks b_1 and b_2 alternately. For this purpose there is connected with the actuating means (not shown) which effects the advancing movement of the belt conveyor h, a drawbar k which acts on a crank disc m which a cam l is rotatable as one. The crank disc m is mounted on an upright n, the laterally bent upper end of which forms a bearing o for a two-armed lever p, contacting at its lower end with the cam l and presenting at its upper end a support for the bridge plate i, which is adapted to turn on a pivot r, on the upper end of a fixed carrier arm q, and bears, either by gravitation or under the action of a spring, against the upper end of the lever p.

When the bridge plate i is in the position indicated in full lines, the belt conveyor h delivers to the upper shaker track b_1, the first mold coming along the belt conveyor h being pushed on to said track. On the next full mold being pushed forward by the belt conveyor h, the crank disc m is actuated by

the drawbar k, the lever p is angularly displaced by the action of the cam l and moved in the direction of the arrow A so as to assume the position indicated by the line C—D. The bridge plate i, resting on the upper end of the lever p is thus lowered about the pivot r, in the direction of the arrow B and takes up the position indicated by broken lines. In this position of the bridge plate i, the next oncoming (second) mold is delivered over the bridge plate i on to the lower shaker track b_2. When the mold has been taken over by this track, the bridge plate i is returned into the upper position so that the next (third) mold is delivered into the upper shaker track b_1. This operation repeated continuously, assuring a uniform alternate loading of the upper and lower shaker tracks b_1 and b_2.

This alternate loading of two tracks enables without any further measures, the shaker machine to deal with twice as many molds as before, in the same time. The existing output may be increased to three and fourfold by providing additional—third or fourth—tracks. Thus, by the arrangement of a plurality of superimposed shaker tracks, the output of the known shaker machines can be increased, to an extraordinary extent, without increasing substantially the complication or cost of said machines. Owing to the rigid interconnection of the superimposed tracks, the mechanism producing, the oscillating movements is just the same as in a machine with only a single track. The arrangement of a plurality of superimposed shaker tracks can therefore be applied to any existing older shaker machine, and the mold-control device can also be added thereto.

The design of the mold-control device may differ, in the most diversified manner, from the embodiment described without departing from the scope of the invention.

The invention can be applied both to shaker machines in which the shaking and advancing of the molds are effected simultaneously by oblique shocks, and to machines in which the molds are advanced by means of a separately driven belt. Further it is not essential for the superimposed shaker tracks to be rigidly interconnected. On the contrary, they may be mounted quite independently, in which case each track has a separate drive.

What I claim is:

1. In a device of the character described, a plurality of superimposed shaker tables, and means for feeding molds to said tables, including a horizontally pivoted bridge-plate, a rocking lever engaged with the under face of said plate and means for rocking said lever whereby to alternately dispose the forward edge of said plate in registration with said tables.

2. In a device of the character described, a plurality of superimposed shaker tables, a mold feeding means, and a transfer mechanism for successively delivering molds from said feeding means to each of said tables, said transfer mechanism including a pivotally mounted bridge-plate extending between said tables and feeding means, a rocking lever having one end engaged with the under face of said plate, and a cam driven in timed relation to said feeding means for rocking said lever whereby to successively aline the free edge of said bridge plate with each of said tables.

GEORG GÄBEL.