March 21, 1967 H. KRAMER 3,310,268

HINGE BRACKETS

Filed May 24, 1965

Fig. 1.

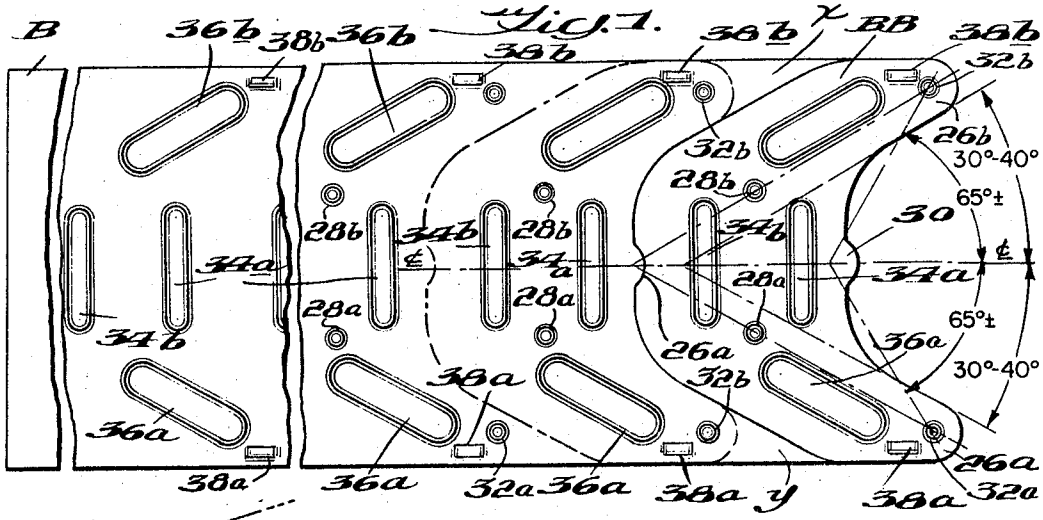

Fig. 2.

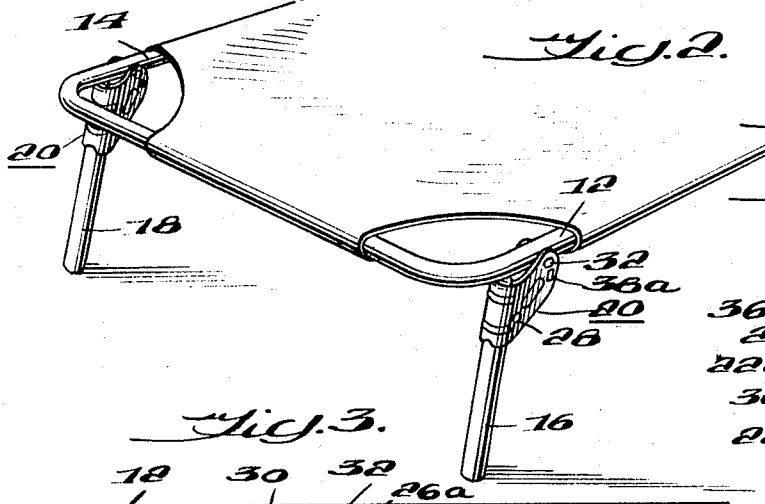

Fig. 5.

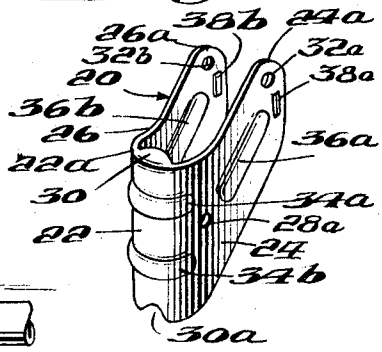

Fig. 3.

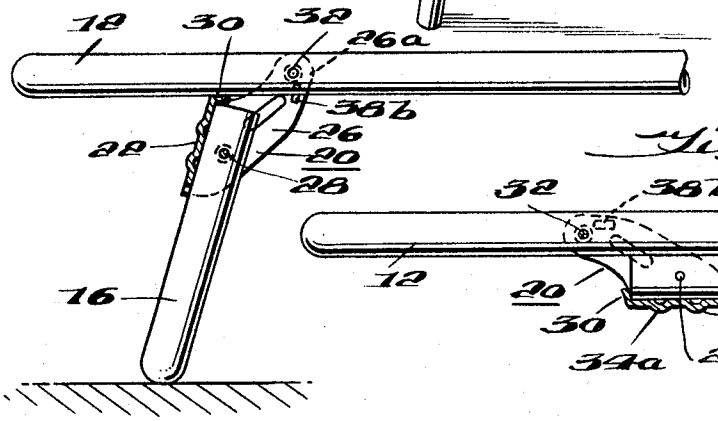

Fig. 4.

INVENTOR

HYMEN KRAMER,

BY J. Harold Kilcoyne

ATTORNEY

United States Patent Office 3,310,268
Patented Mar. 21, 1967

3,310,268

HINGE BRACKETS

Hyman Kramer, 2764 E. 16th St.,
Brooklyn, N.Y. 11218

Filed May 24, 1965, Ser. No. 458,148
5 Claims. (Cl. 248—188)

This invention relates to improvements in hinge brackets, and more particularly to an improved hinged bracket for hingedly connecting tube, rod and like members adapted to swing relatively to one another. As illustrative, the invention will be described as applied to folding cot structure, wherein improved hinge brackets as herein contemplated are employed as a means for hingedly connecting the legs to the cot frame, usually the side rails of said cot.

Stated broadly, a major object of the invention is the provision of an improved hinge bracket for hingedly connecting two members which are adapted to swing or fold with respect to one another, from or to a "set up" position to and from a folded or collapsed position, and which is so constructed and arranged that it also serves effectively to brace the one member which partakes of swinging motion with respect to the other when said members are in their "set up" position.

More particular objects of the invention are the provision of a hinge bracket especially designed and suited for use in folding cot construction, wherein the hinge bracket serves primarily to connect a folding leg to a cot-frame member, but whose construction is such that it also functions as an effective leg brace for the leg which it connects when said leg is extended to its in-use or set-up position; the provision of a hinge bracket as aforesaid which incorporates an integral part serving in the set-up position of the leg as an effective seat for the member to which it is hingedly connected; and the provision of a hinge bracket as aforesaid which further incorporates integral means which assist in maintaining said leg in its folded-up position with respect to the cot frame, upon said leg having been moved to that position.

Yet another object of the invention is the provision of a novel hinge-bracket blank configuration enabling the production of hinge brackets of the invention from flat strip stock with an absolute minimum of scrap.

The above and other objects and features of advantage of a hinge bracket and hinge-bracket blank configuration according to the present invention will become apparent from the following specification and accompanying drawings, wherein:

FIG. 1 is a broken-away plan view of a partially blanked-out strip illustrative in part of the manner of fabricating hinge brackets of the invention from strip stock and further illustrating the configuration of an individual hinge-bracket blank as herein contemplated;

FIG. 2 is a broken-away perspective view of the end portion of a folding cot which illustrates a typical application of hinge brackets of the invention, i.e. in hingedly connecting the supporting legs to the side rails of the frame of a folding cot;

FIG. 3 is a vertical section taken through one of the hinge brackets shown in FIG. 2, which depicts its leg connecting and bracing functions;

FIG. 4 is a view corresponding to FIG. 3 but showing the leg folded against the cot side-rail; and

FIG. 5 is a perspective view of a hinge bracket of the invention disassociated from both cot side-rail and cot end-leg.

Referring to the drawings in detail, it will be understood that the partially shown folding cot **10** illustrated in FIG. 2 is exemplary only of various folding or collapsing-type constructions to which hinge brackets of the

invention are suited. More particularly, such a typical construction comprises a body frame including two longitudinal side rails **12**, **14** and legs **16**, **18** acting in concert with other legs (not shown) normally to support said frame in its "in use" or set-up position. As is generally true for all types of folding cots, said legs are pivotally connected to said side rails for swinging movement to and from a set-up position (FIGS. 2 and 3) from and to a folded or collapsed position as in FIG. 4.

According to the invention, each said leg-to-side rail connection is provided by a hinge bracket generally designated 20 and which basically comprises an elongated body portion **22** of U-section corresponding to that of the leg or other part which it is to receive, and parallelly disposed, planar side wings **24**, **26** extending forwardly-upwardly from the opposite sides or arms of said body portion. As shown, said body portion is semi-cylindrical because the leg **16** or **18** which it is adapted to receive has circular section, and it has radius slightly in excess of that of said leg **16** or **18**, so that the latter is readily receivable therein. The axial length of said body portion is appreciable so that when the bracket is fitted to the upper end portion of a leg, it will enclose a substantial length portion thereof.

The bracket side wings **24**, **26** are spaced apart a distance slightly greater than the external diameter (or other width dimension if non-circular) of a side rail **12**, **14** (which diameter or dimension will ordinarily be that of the legs **16**, **18**), and thus a side rail will be freely receivable between said wings. The extent of forward-upward extension of the side wings **24**, **26** from the top edge of the body portion of the bracket is somewhat greater than the diameter (or width dimension) of a side rail, being determined by the angle of inclination that a leg when extended is to bear to a side rail and by the uppermost ends of said side wings being capable of forming mounting ears for the rivet which is to pivotally connect the bracket to said side rail. Stated otherwise, said side wings extend forwardly-upwardly beyond the top edge **22***a* of said bracket body portion **22** a distance such as will establish a predetermined angular relation (approximately 120° in the typical construction shown) between the axis of the side rail received between the upper end portions of said side wings and the longitudinal axis of said body portion and the leg associated therewith, when said leg is swung away from the rail to a position such that said rail bears on the top edge of the bracket body portion, and the extension of said wings will also be such as to provide enough area to the respective upper-end portions thereof that said portions can serve as mounting ears (designated **24***a*, **26***a*) for the cross pin or rivet which is to pivotally connect said bracket to a side rail and which desirably is to pass through the side rail on a horizontal diameter thereof.

As best seen in FIGS. 3 and 4, each said bracket **20** is affixed to the upper end portion of the leg which it serves by one or more rivets (one rivet **28** being shown). Illustratively, said rivet **28** passes through the bracket body portion and leg on a diameter located approximately midway of the axial length of said body portion, but this rivet positioning may be varied. By reference to FIG. 3 in particular, it will be seen that said bracket body portion in its top edge is provided with an integral, inwardly extending tab **30** which extends over the top edge of said leg and thus acts in concert with said rivet **28** in establishing and maintaining the proper vertical position of the bracket with respect to the leg to which it is connected. A cross pin or rivet **32** extending through holes in the aforesaid rail-receiving or mounting ears **24***a*, **26***a* (in which the upper portion of said side wings **24**, **26** ter-

minate) serves as a pivot about which the assembled leg and bracket may swing to and from the respective leg positions shown in FIGS. 3 and 4.

FIG. 5 in particular illustrates a further advantageous feature of the invention, namely, that of the outwardly projecting, crosswise extending strengthening ribs 34*a*, 34*b* and the similarly outwardly projecting upwardly-forwardly inclined strengthening ribs 36*a*, 36*b* provided in the body portion 22 and side wing portions 24, 26, respectively, of the bracket. Said ribs and their illustrated disposition are such that they effect substantial strengthening of the bracket as compared to one devoid of such ribs, and accordingly a bracket having such strengthening ribs may be made of lighter gage stock than hitherto considered possible.

Another feature of advantage of the hinge bracket of the invention is that provided by the depressions 38*a*, 38*b* sunk into the side wing portions 24*a*, 24*b* at locations thereof such that when a leg and its attaching bracket are swung to their folded up or collapsed position against a frame side-rail as in FIG. 4, said depressions "move over center" with respect to said side rail and thereupon serve to frictionally hold said leg and bracket in that position. Such assumes, which is as intended here, that the inner surfaces of said depressions 38*a*, 38*b* are spaced apart a distance slightly less than the external diameter of the side rail.

Reverting to the aforementioned tab 30 formed on the upper-end edge of the semi-cylindrical body portion 22 of the hinge brackets, such by reference to FIG. 5 preferably has an upwardly concave surface shaped complementally to the under periphery or side of the side rails 12, 14. Thus, rather than seating against a non-conforming and sharp top edge of a leg, each side rail seats against an inbent tab surface that not only has substantial area as compared to said top edge proper but also a surface which conforms to that of the periphery or underside of said rail. FIG. 5 also shows a recess designated 30*a* in the bottom edge of the body portion 20 of the bracket, as results from the brackets of the invention being blanked out from immediately contiguous areas of continuous strip stock, as will now be briefly described.

Referring to FIG. 1, such illustrate a strip-form starting blank B in the process of being moved through a progressive die (not shown) but this view may also be taken as illustrating a fixed strip or blank being acted upon progressively by a movable die which moves along said strip. In a first stage, the aforesaid strengthening ribs 34*a*, 34*b*, 36*a*, 36*b* and the depressions 38*a*, 38*b* are formed in the blank. In the next stage, the rivet holes 28*a*, 28*b* and 32*a*, 32*b* for the aforesaid rivets 28 and 32, respectively, are punched in the blank. In a final stage, an individual bracket blank designated BB is struck off from the strip B, and in the same operation the aforesaid tab 30 may be formed in embryo by striking same out from the material ultimately to form the lower-end edge of the semi-cylindrical body portion 22 of each next preceding bracket blank. Thus, each bracket blank as it is formed has a tab projecting from one edge, ultimately to be the top edge of the elongated body portion of the finally shaped bracket, and a recess 30*a* in the opposite edge destined to form the bottom end edge of said body portion. Alternatively, the individual bracket blanks BB may be blanked out except for the tabs 30 in a next-to-final stage and said tabs formed only when the so-formed blanks are finally severed one from the other. According to such procedure, the tabs in embryo provide connecting webs between the blanks BB up to the time of actual tab severance.

The individual blanks BB leaving the die may be stored or they may be immediately delivered to bending apparatus which bends them about their longitudinal center lines to their final curvature and shape. This bending operation may also impart the upwardly concave shaping to the tabs 30, or such may be imparted in a separate operation as desired. Alternatively, bending of the blanks as aforesaid may be effected in the same or approximately the same operation as that effecting severance of the blanks from the strip and/or forming of the tabs 30.

It is a particularly noteworthy feature of the present invention that the bracket blanks BB coming from the die are so configured that scrap is minimal. That is to say, the bracket blank areas extend entirely across the starting blank B and they nest with one another. Accordingly, the rear lines of each preceding bracket blank area coincide with the front lines of each next following bracket blank area, except for the small areas designated *x* and *y* (FIG. 1) which are negligible, with the result that the bracket blanks may be formed substantially without scrap loss. Moreover, each blank BB as finally formed is roughly V-shaped, being comprised by an apical portion and divergent leg portions. However, rather than coming to a point as with truly V-shaped parts, said apical portion is blunted, being defined by inner (crotch) and outer edge lines which are generally rounded and into which merge the inner and outer side-edge lines of said leg portions, which latter are disposed substantially parallel to one another. To provide the body portion 20 of the final leg bracket with requisite axial dimension, the apical portion of each said blank which ultimately provides said body portion has substantially greater dimension in the direction of its longitudinal center line, i.e. the line extending medially through said apical portion from outer to inner edges thereof, than the thickness of the aforesaid divergent leg portions of the blank.

Furthermore, since the blanks are intended to form hinge brackets which establish an angle of approximately 120° between a side rail or equivalent structural member and a supporting leg or like member, the aforesaid leg portions of the bracket blanks BB as formed diverge from one another at an angle of 30°–40° from said longitudinal center line. Finally, the said leg portions are sufficiently long as to provide for the location of the rivet holes 32 in their free end portions at points of intersection of divergent straight lines which extend substantially medially through the leg portions at approximately the same angle to said longitudinal center line that said leg portions bear to said center line, with straight lines which diverge from the mid point of the inner edge of the apical portion of the blank at an angle of approximately 60° to said center line.

From the above, it will be appreciated that sheet metal hinge-bracket blanks having the special configuration and related features according to the foregoing description may be produced in quantity and thereafter formed to their final bracket shape very speedily and economically, as compared to the operations required to produce the final brackets made therefrom which serve similar function.

Analysis of FIGS. 2 and 3 will further show that a hinge-bracket according to the invention serves as a leg brace as well as a leg hinge and thus makes the provision of separate leg-bracing means employed in folding leg constructions wholly unnecessary. Also to be observed is that a hinge bracket of the invention incorporates within its own structure effective friction means, i.e. the inward depressions 38*a*, 38*b*, capable of securing the leg which it connects in its folded-up position with respect to an associated frame side rail, and thus it constitutes a self-contained structure performing the manifold functions which the ideal hinge bracket could be expected to perform.

As many changes could be made in carrying out the above constructions without departing from the scope of the invention, it is intended that all matter contained in the above description or shown in the accompanying drawing shall be interpreted as illustrative and not in a limiting sense.

I claim:

1. A hinge bracket for pivotally connecting tube, rod and like members for relative swinging movement with

respect to one another comprising: an elongated body portion having generally U-section and adapted to receive and partially enclose the upper end portion of one said member and side wings extending forwardly-upwardly from said body portion and terminating at their upper ends in ear formations which are spaced apart an amount enabling the reception of the other of said members therebetween; means for fixedly securing said body portion to the upper end portion of said one member and in position such that the relatively top edge portions of each are substantially at the same level; said ear formations having aligned holes for the reception of a pivot pin which is adapted to be passed cross-wise through same and through said other member received therebetween; and said top edge of the body portion of the bracket having an integral, inwardly projecting tab which is adapted to extend over the top edge of said one member to limit vertical extension of said one member when received in the bracket and whose relatively upper surface is shaped to conform to the relatively under surface of said other member received between said ear formations, said ear formations being provided with inward depressions so located along corresponding edges thereof that they move over-center of the aligned holes provided in said formations when said bracket is swung with said one member to a position in which said one and other members are substantially parallel.

2. A hinge bracket blank comprising a flat piece of sheet metal having general V configuration thereby to provide an apical portion and divergent leg portions, said apical portion defined by inner and outer rounded edge lines and having substantially greater dimension in the direction of the longitudinal center line of the blank than the thickness of the leg portions, said leg portions having parallel side edges and diverging from one another at an angle of 30–40° to said longitudinal center line and being each provided in its free end portion with a hole for a bracket-attaching pin and the like, the location of the holes in said leg portions and thereby the length of said leg portions being established by the points of intersection of divergent lines extending substantially medially through the leg portions at approximately the same angle to said center line that said leg portions bear to said center line with lines extending in opposite directions outwardly from the midpoint of the inner edge of the blank and which are disposed at at an angle of a approximately 65° to said center line.

3. A hinge bracket blank according to claim 2, which further includes a small-width, convexly shaped tab integral with the blank and which projects from the inner edge of the apical portion into the space between the leg portions of the blank.

4. In combination, a side rail, a supporting leg, and a hinge bracket for connecting said leg to the side rail and permitting swinging movement of the leg between a supporting position in which it extends at an angle of approximately 120° to said side rail and a collapsed position in which it is disposed parallel and closely adjacent to said side rail, said hinge bracket including an elongated body portion having generally U-section which is closely fitted to the upper end portion of said supporting leg and in which said leg portion is received, rivet means securing the so-received leg portion to said body portion in position such that the top edges of said portions are at substantially the same level, said bracket further including side wings extending forwardly-upwardly from said body portion and terminating at their upper ends in ear formations between which said side rail is received, a pivot pin extending between said ear formations and through said side rail, the top edge of the bracket body portion having an integral, inwardly projecting tab which extends over the top edge of the leg portion, said tab being upwardly concave and thereby providing a concave seat for said side rail when the supporting leg is swung to its rail-supporting position, and said hinge bracket further incorporating means for frictionally securing the supporting leg in said collapsed position when actuated thereto.

5. The combination according to claim 4, wherein said frictional securing means comprises inward depressions in said ear formations which define inwardly directed lugs which are so located along corresponding edges of said ear formations that they move overcenter of the pivot pin and frictionally engage opposite sides of the rail when said supporting leg is swung to its collapsed position.

References Cited by the Examiner

UNITED STATES PATENTS

2,133,047	10/1938	Sheldon	297—55
2,255,870	9/1941	Adler	297—58
2,834,566	5/1958	Bower	248—103

CHANCELLOR E. HARRIS, *Primary Examiner.*

JOHN PETO, *Examiner.*