Feb. 28, 1961 C. B. WATTS, JR 2,973,517

WING TYPE DIPOLE ANTENNA WITH RADIATORS OF PARTICULAR SHAPE

Filed Dec. 23, 1957

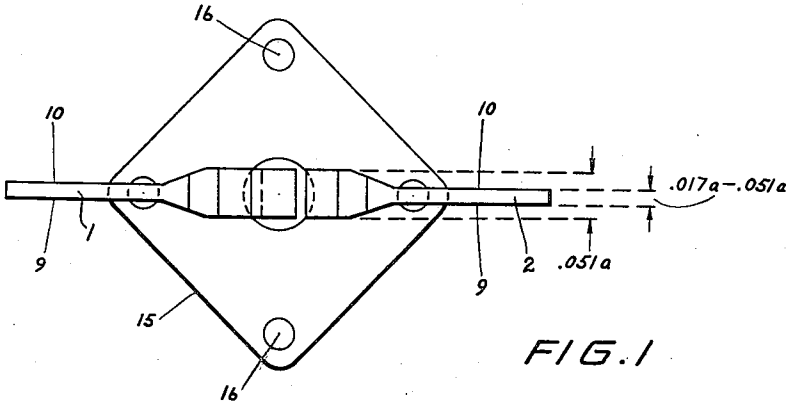

FIG. 1

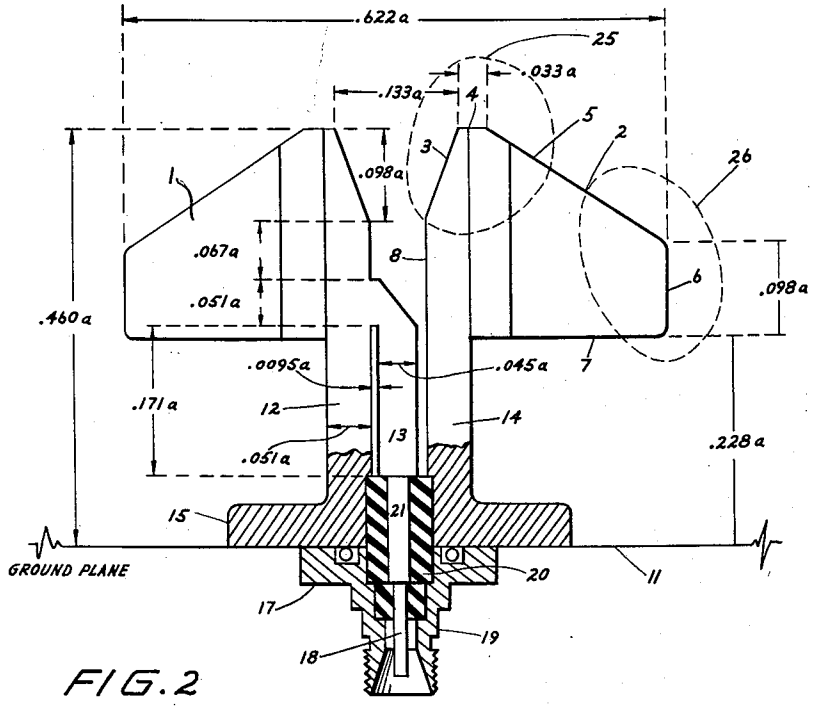

FIG. 2

INVENTOR.
Chester B. Watts, Jr.
BY Ezekiel Wolf
his Attorney

United States Patent Office 2,973,517 Patented Feb. 28, 1961

2,973,517

WING TYPE DIPOLE ANTENNA WITH RADIATORS OF PARTICULAR SHAPE

Chester B. Watts, Jr., Winchester, Mass., assignor to Andrew Alford, Boston, Mass.

Filed Dec. 23, 1957, Ser. No. 704,628

8 Claims. (Cl. 343—795)

The present invention relates to a dipole.

The dipole of the present invention is designed particularly to provide a low standing wave ratio within a two to one operating frequency band when the dipole is mounted on a flat metal sheet or a large metal cylinder, with the dipole presenting a particularly good match to a 50 ohm coaxial feeder.

A further object of the present invention is to provide a dipole antenna which may be cast or formed of a network of conductive rods of various cross sectional shapes for radiation of a selected frequency band, with the design of the antenna such as to withstand substantial shock and vibration and various weather conditions.

The present invention provides a dipole of a particular shape and of substantially particular relative dimensions which is preferably fed from a 50 ohm coaxial line through a tri-conductor arrangement which matches the 50 ohm impedance of the coaxial line with the impedance of the radiators and which also acts as a balun.

More fundamentally the present invention provides a dipole having two large substantially preferably coplanar masses with the axis of each mass passing through feed points and intersecting to form imaginary diverging lines of substantially 90° or less.

These and other objects and advantages of the present invention will be more clearly understood when considered in connection with the accompanying drawings in which:

Figure 1 is a top plan view of the invention; and

Figure 2 is a side partially cross section elevation of the invention.

The dipole of the present invention is particularly adapted for use in connection with a scanner or variable delay lines for, as indicated, when it is mounted on a flat metal sheet or a large metal cylinder, it presents a relatively good match to a 50 ohm coaxial feeder with a standing wave ratio at frequencies within a two to one operating frequency band of below about 1.5 or 1.6.

In this arrangement, there are provided two radiating members **1** and **2** similarly shaped and symmetrically arranged about a center longitudinal axis with the two members being coplanar. These members **1** and **2** form outwardly extending tapered radiating wings. Because of the similarity of the two members, only member **2** will be described in detail. This member **2** includes edges **7** and **8**. Additionally, a V-shaped gap formed by the edge **3** with an imaginary vertex close to the feed point form an extension of the edge **8**. Thus, the mass of the wings is arranged symmetrically about an imaginary axis intersecting near the point of feed and diverging from said point to form an angle of substantially 90° or less. As the antenna is in fact a dipole, edge **7** is substantially coplanar with the masses of the radiating wings extending radially inwardly from this edge whereby the axis of

symmetry of the radiating wings forms an angle of substantially 90° or less with edge **7**. The plane of member **2** is bounded by six edges or sides **3**, **4**, **5**, **6**, **7** and **8** as well as opposing faces generally indicated at **9** and **10**. Member **1** is similarly formed as shown in the drawing. In order to obtain a voltage standing wave ratio of less than substantially 1.5 or 1.6 within a frequency band of two to one or as expressed in wave lengths

$$\frac{3}{4}a \qquad \frac{3}{2}a$$

where

a=wavelength at arithmetic mean frequency,

$$\frac{f_L+f_U}{2}$$

the relative parameters indicated in the drawings should preferably be maintained, particularly in the design of the edges.

Thus, utilizing the ground plane **11** as the x axis, the projected height normal to the x axis of side **3** is $.098a$. The length of side **4** is $.033a$. The length of side **5** projected onto the x axis is $.2115a$. The length of side **6** is $.098a$. The length of side **7** from side **6** to side **8**, and through the feed, is $.279a$. The length of side **8** is $.134a$. The overall height of the dipole from the ground plane is $.460a$. The width is $.622a$ from end to end, while the spacing of the members **1** and **2** from the ground plane is $.228a$. Other relative parameters are indicated on the drawings including the width of the members **1** and **2** at their outer ends which, as indicated in Figure 1, may vary from between $.017a$ to $.051a$. The inner ends of these members **1** and **2** are $.051a$. Variations in the thickness of the outer ends, as indicated, will not adversely effect the radiating characteristics of the dipole although it is preferable to have this portion of the dipole reduced in thickness so that less mechanical strain is placed upon the center portion.

The members **1** and **2** are fed from an unbalanced coaxial line through a balanced three conductor feed arrangement which arrangement is made integral with mechanical supports of the dipole elements. These three conductor feed members comprise the legs **12**, **13** and **14**. As is known, it is inherent in conversions of this general type, that is, from an unbalanced coaxial mode to a balanced mode, that a four to one impedance transformation exists between the balanced and coaxial mode. This conversion takes place at the shorting post of the radiating elements and thus the coaxial mode may be considered as proceeding from the feeding coaxial line and up the three conductor structure **12**, **13** and **14** as far as the shorting post of the radiating elements. The terminating impedance of the coaxial mode comprises two parts. The first part is one-fourth the balanced impedance of the radiating elements over the ground screen. The second part, in parallel with the first, is one-fourth of the reactance presented by the three conductor structure, operating in the balanced mode, short circuited at the base.

In order to reduce the frequency dependence of the coaxial mode terminating impedance, this impedance was designed as a substantially constant impedance of approximately 17 ohms over a two to one frequency range. This 17 ohm impedance is transformed to a value closer to 50 ohms at the base of the dipole, or rather in the balanced line. This arrangement is obtained by lowering the characteristic impedance of the three conductor elements **12**, **13** and **14** which is accomplished

by increasing the cross section of the conductor **13** and making it rectangular. In addition, a small impedance compensation may be placed in series with the center conductor **13**, as indicated.

Thus, the leg **12** is integral with member **1** and forms a continuation of side **8** as does leg **14** with respect to member **2**. Both of these legs as well as leg **13** are rectangular in shape and have dimensions equal to the full thickness of the individual elements **1** and **2** at their thicker points. Leg **13**, which extends parallel to legs **12** and **14**, is connected to member **1** at the bottom of side **8**. It will be noted that the length of leg **13** is .171*a*. Legs **12** and **14** are integral with the base **15** which, as indicated at Figure 1, may be square in shape with a series of screw holes **16** adapted to secure it to a ground sheet **11**. The coaxial lines which feed the dipole may be connected to the end type plug **17** having inner conductor **18** and outer conductor **19**, with outer conductor **19** suitably secured to the ground plane and the dipole itself. The inner conductor **18** insulated by insulating dielectric **20** is connected to the lower end of leg **13** through the series section **21**.

While the foregoing relative dimensions are ideal, it will be noted that departures from them will normally increase the voltage standing wave ratios above the desired 1.5 or 1.6. Substantial variations may be incorporated as previously indicated in the outer portions of the members **1** and **2** insofar as thickness is concerned. However, the thickness of the center portion is to some extent critical. It will also be observed that the area substantially enclosed by dotted lines at **25** affect the high frequency end of the band width transmitter while the area enclosed by the dotted lines indicated at **26** affects the low frequency of the band width transmitter. Variations therefore of the side edges in these areas will have effect respectively on the high and low frequency portions of the band widths.

It may be noted that the center conductor **13** is connected to one of the outer conductors at a point remote from the lower ends of the outer conductors.

Having now described my invention, I claim:

1. A dipole comprising a pair of coplanar radiators, each having a geometric configuration providing three continuous sides each normal to the adjacent one and two additional sides tapering towards one another from said continuous sides and interconnected by a sixth side parallel with the center one of said continuous sides, with one of said additional sides longer than the other, and means feeding said radiators in phase opposition at corresponding points at substantially the intersection of two of said continuous sides.

2. A dipole as set forth in claim 1 wherein the relative lengths of said sides include

said center continuous side equals .279*a*,
said continuous side adjacent said intersection equals .134*a*,
the other of said continuous sides equals .098*a*,
and said sixth side equals .033*a*

where *a* equals the wavelength at the arithmetic mean frequency of a desired frequency band.

3. A dipole as set forth in claim 2 wherein said one and other additional sides have lengths projected onto a parallel with said other of said continuous sides of 2115*a* and .098*a* respectively.

4. A dipole as set forth in claim 2 wherein the overall height of the dipole from the ground plane is .460*a* and the width from end to end of said radiators is .622*a*.

5. A dipole as set forth in claim 4 wherein said radiators have a thickness of between substantially .017*a* and .051*a*.

6. A dipole as set forth in claim 2 wherein said means for feeding said radiators comprises a four to one impedance transformation means.

7. A dipole comprising a pair of coplanar radiators each having a geometric configuration providing three continuous sides each normal to the adjacent one and two additional sides tapering toward one another from said continuous sides with one of said additional sides longer than the other, and means including impedance transformation means feeding said radiators in phase opposition at corresponding points at substantially the intersection of two of said continuous sides.

8. A dipole antenna comprising, a pair of wing structures, each wing structure having six edges, a first pair of opposing faces, a second pair of opposed faces extending from one of said edges toward another in parallel relationship, and a third pair of opposing faces connecting said first and second faces and converging from said first faces toward said second faces.

References Cited in the file of this patent

UNITED STATES PATENTS

2,311,364	Bushbeck et al.	Feb. 16, 1943
2,313,046	Bruce	Mar. 9, 1943
2,433,183	Wolf	Dec. 23, 1947
2,555,857	Nelson et al.	June 5, 1951
2,594,839	Alford	Apr. 29, 1952
2,642,528	Albright	June 16, 1953

FOREIGN PATENTS

592,343	Great Britain	Sept. 16, 1947