F. J. MATCHETTE.

VACUUM SWEEPER.

APPLICATION FILED OCT. 12, 1908.

1,035,372. Patented Aug. 13, 1912.

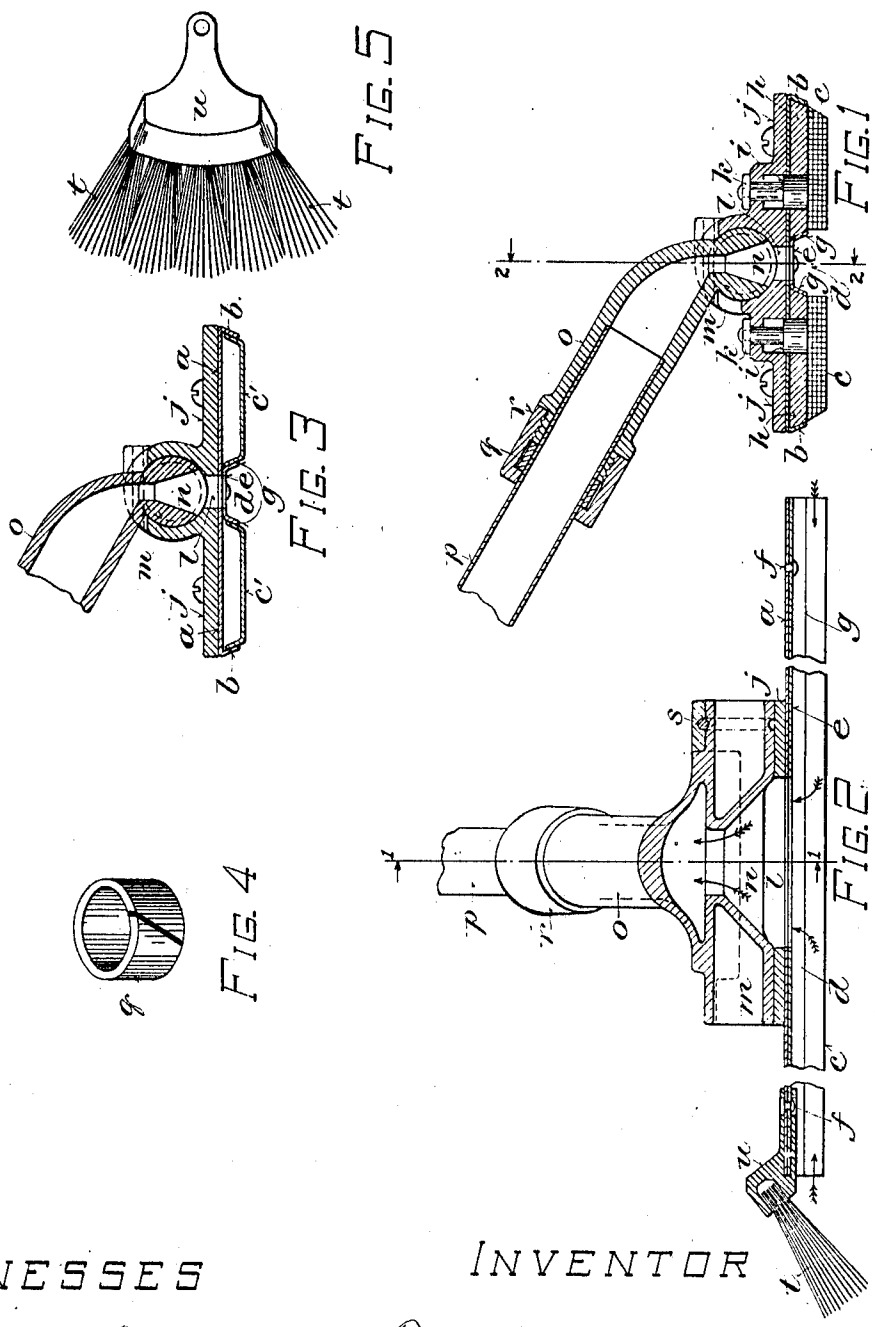

WITNESSES

Chas. L. Goss.

John J. Metz

INVENTOR

Frank J. Matchette

BY Winklen Flowden Bottum & Fawsett

ATTORNEYS

UNITED STATES PATENT OFFICE.

FRANK J. MATCHETTE, OF MILWAUKEE, WISCONSIN.

VACUUM-SWEEPER.

1,035,372. Specification of Letters Patent. Patented Aug. 13, 1912.

Application filed October 12, 1908. Serial No. 457,215.

To all whom it may concern:

Be it known that I, FRANK J. MATCHETTE, a citizen of the United States, residing at Milwaukee, in the county of Milwaukee and State of Wisconsin, have invented certain new and useful Improvements in Vacuum-Sweepers, of which the following is a specification, reference being had to the accompanying drawing, forming a part thereof.

The main objects of this invention are to easily, rapidly and thoroughly take up and remove dust and dirt from wood, tile or carpeted floors and other surfaces; to facilitate the removal of dust and dirt from corners and angles between walls and floors and from inaccessible places under furniture or fixtures; to avoid scratching and marring the polished or finished surfaces of floors, walls, fixtures and furniture; and generally to simplify and improve the construction and operation of devices of this class.

It consists in certain novel features of construction and in the peculiar arrangement and combination of parts as hereinafter particularly described and pointed out in the claims.

In the accompanying drawing like characters designate the same or similar parts in the several figures.

Figure 1 is a vertical central section on the line 1 1, Fig. 2, of a vacuum sweeper embodying the present invention; Fig. 2 is a vertical section thereof on the line 2 2, Fig. 1; Fig. 3 is a central vertical section similar to Fig. 1, showing a modification of the sweeper provided with metal shoes or bearings for use on carpets, rugs and the like; Fig. 4 is an enlarged perspective view of the severed contractile ring for holding the tubular handle in the nozzle shank of the sweeper and forming a swivel connection between them; and Fig. 5 is a plan view of one of the detachable brushes for providing a flexible hooded extension over the open ends of the dust and dirt collecting channel of the sweeper.

The sweeper comprises a back or body *a*, which may be conveniently made of sheet metal having along its longitudinal edges inwardly inclined depending flanges *b* which form retaining guides for removable shoes or bearings *c* on opposite sides of a dust and dirt collecting channel *d* extending across the back on the under side and open at the ends thereof to the atmosphere. A sheet metal plate *e* secured by rivets *f* to the under side of the back plate and having outwardly inclined depending marginal flanges *g*, forms the top and a part of the sides of said channel and retaining guides for the inner beveled edges of the shoes or bearings *c* parallel with their outer beveled edges, which are fitted in the guides formed by the flanges *b*. For sweeping wood and tile floors or removing dust and dirt from hard walls or polished or finished surfaces, the shoes or bearings *c* are made of or faced with pads of felt or similar soft material which will not scratch or mar such floors or surfaces. These pads may be glued or cemented to strips *h* of wood or other suitable material, as shown in Fig. 1, the strips being beveled on their longitudinal edges to fit between and engage with the flanges or guides *b* and *g*. They are held in place when inserted in said guides by locks or fastenings which may consist of bolts *i* fitted in sockets formed in the back plate *a*, and a socket plate *j* attached to the upper side thereof. The stems of these bolts project upwardly through holes in the plate *j* and are provided on the upper side thereof with washers or heads *k* which are accessible from the upper side of the sweeper and serve as means for thrusting the bolts into holes or sockets in the strips *h* and withdrawing them therefrom.

For sweeping or removing dust and dirt from carpets, rugs and the like, the padded or soft shoes or bearings *c* are replaced, as shown in Fig. 3, by shoes *c'* of some suitable hard and durable material, such as metal. These shoes or bearings may be conveniently made as shown, of sheet metal having beveled or inclined flanges struck up along their longitudinal edges to fit between and engage with the flanges *b* and *g* on the back plate *a*. These metal or other hard shoes or bearings *c'* for carpeted floors and the like, may be held in place in the back by bolts similar to those shown in Fig. 1, or by other fastenings.

The plate *j* is formed above and parallel with the channel *d* with a semicylindrical socket which communicates on the under side through an opening *l* with said channel between and at a distance from its open ends. In this socket is fitted a cylindrical nozzle *m* which is adapted to rock or oscillate therein, and has a flaring opening *n* registering constantly in all positions of the

nozzle and handle relative to the back, with the opening *l*. The nozzle is formed or provided with a tubular shank *o* with which the flaring opening *n* communicates and which forms a socket for the reception of a tubular handle *p*, forming an exhaust conduit from the nozzle. The handle *p* is swiveled and held in the nozzle shank *o* by means of a diagonally severed elastic ring *q*, which is of normally smaller internal diameter than the external diameter of the tubular handle *p*, and which is loosely confined in a flanged sleeve *r* threaded on the shank *o*. By means of this swivel coupling the tubular handle *p* may be easily attached to and detached from the sweeper by simply thrusting it into and withdrawing it from the elastic expansible ring *q*, which grips it with sufficient force to hold it in place in the nozzle shank *o* for ordinary use, and at the same time permits the sweeper to turn freely about the axis of the tubular handle *p* so that the pads or shoes *c* or *c'* will bear squarely and evenly on the floor or surface over which the sweeper is moved, whatever may be the relative position of the tubular handle, which is in practice connected by hose or a flexible pipe with a vacuum pump or exhauster. The nozzle socket is open at one end or both ends, and the nozzle which may be readily inserted and withdrawn therefrom endwise, is held in place therein by a pin or key *s* inserted in a transverse hole through one end of the socket and engaging an annular groove in the nozzle, as shown in Fig. 2.

In the operation of the sweeper the air draft or current produced and maintained through the nozzle is confined and concentrated by the channel *d* over a long narrow area of the floor or surface covered by said channel, the influence or effect of the draft or current extending somewhat beyond the open ends of the channel, so that dust and dirt can be readily and effectively removed from the angles and corners formed by the intersection of walls and floors by running the sweeper in close proximity therewith. To extend the influence or effect of the draft or air current at the ends of the sweeper and to more effectively dislodge and remove dust and dirt from corners and angles in working around the legs and bases of furniture and fixtures without marring the same, the sweeper may be provided at the ends of the back with brushes extending outwardly and downwardly therefrom over the open ends of the channel *d*. These brushes may consist of any suitable material; but, as shown in Figs. 2 and 5, they are represented as made of bristles secured in blocks or plates *u*, which are forked and formed with vertical holes so as to be slipped over the ends of the plates *a* and *e*, and be sprung into engagement with the rivets *f*. These attachments can thus be readily applied to the sweeper when they are needed and removed therefrom when they are not needed.

The shoes or bearings *c* and *c'* being easily and quickly removed from the back and being interchangeable, the sweeper can be readily fitted for operating on carpeted or uncarpeted floors or the like, and the soft or padded shoes *c* can be easily and cheaply renewed as they become worn and defective. The tubular handle *p* being hinged or pivoted with the nozzle to the back of the sweeper, can be raised or lowered and held at whatever angle may be most convenient for the operator, and may be turned on its axis in the shank of the nozzle to accommodate the hose connection without tipping the back plate or lifting any part of the shoes or bearings out of contact with the floor or other surface over which the sweeper is moved. By turning the handle down, the sweeper may be thrust and operated under radiators, fixtures and furniture in places which would be otherwise inaccessible, the height or vertical dimension of the sweeper when the handle is turned down being quite small. The channel *d* being arranged transversely to the normal direction of movement of the sweeper and capable of effective operation when made of considerable length, a wide swath is swept, and dust and dirt can be removed from a large area in a short time.

In the operation of the sweeper it may be moved over a floor or other surface like a broom or brush, in any direction, forward and backward or sidewise in a rectilinear direction, or it may be given a rotary or gyratory movement, and it will work effectively to take up and remove dust and dirt in whatever direction it is moved as long as the shoes or bearings on opposite sides of the channel are held in contact with the floor or other surface and a sufficiently strong draft or current of air is maintained through said channel.

The outer edges of the shoes *c* and *c'* are beveled or inclined downwardly and inwardly toward the channel *d* so that in moving the sweeper over a floor or other surface, dust and dirt are more readily drawn by the natural leakage of air underneath the shoes into said channel, the influence or effect of the air draft extending to the outer edges of the shoes. Litter such as scraps of paper and the like, too large or coarse to be conducted off through the exhaust connection of the sweeper, will in the ordinary operation of the device, be pushed forward by the advancing shoe or bearing *c* or *c'*, and thus separated from the dust and dirt which is drawn underneath the shoes into the channel *d*. The rubbing action of the shoes or bearings of the sweeper serves to detach and

loosen mud or dirt which may adhere to the carpet, floor or other surface over which the sweeper is moved, so that as the channel *d* passes over it, it will be taken up and carried away.

Various changes in the details of construction and arrangement of parts may be made without departing from the principle and intended scope of the invention.

I claim:

1. In a vacuum sweeper the combination of a back having a channel extending across the under side from end to end and open at the ends to the atmosphere and guides parallel with said channel, flat bearings removably fitted in said guides on opposite sides of said channel, an operating handle connected with said back, and an exhaust connection communicating with said channel, substantially as described.

2. In a vacuum sweeper the combination of a back having a channel extending across the under side from end to end and open at the ends to the atmosphere and guides parallel with said channel, flat bearings removably fitted in said guides on opposite sides of said channel, locks for holding said bearings in place an operating handle connected with the back, and an exhaust connection communicating with said channel, substantially as described.

3. In a vacuum sweeper the combination of a back having in the under side a transverse channel open at one end, a brush projecting over the open end of said channel, an operating handle connected with the back, and an exhaust connection communicating with said channel at a distance from its open end, substantially as described.

4. In a vacuum sweeper the combination of a back having a transverse channel in the under side open at one end thereof, a removable brush detachably fastened to the back and adapted to project outwardly over the open end of said channel, an operating handle connected with the back, and an exhaust connection communicating with said channel at a distance from its open end, substantially as described.

5. In a vacuum sweeper the combination of a back having a transverse channel in the under side open at one end thereof, a bristle brush attached to the back and projecting at an inclination outwardly and downwardly therefrom over the open end of said channel, a handle connected with the back, and an exhaust connection communicating with said channel at a distance from its open end, substantially as described.

6. In a vacuum sweeper the combination of a back having a transverse channel in the under side open at the ends thereof to the atmosphere, and flat bearing shoes on opposite sides of said channel, a transverse cylindrical socket on the upper side of the back communicating through an opening therein with said channel, a cylindrical nozzle fitted to rock in said socket and having an orifice registering with said opening, and a tubular handle connected with the nozzle and forming an exhaust conduit therefrom, substantially as described.

7. In a vacuum sweeper the combination of a back having a channel across the lower side thereof, removable shoes forming extended bearings on opposite sides of the channel, locking devices for holding the shoes in place with relation to the back, an operating handle connected with the back, and an exhaust connection communicating with said channel, substantially as described.

In witness whereof I hereto affix my signature in presence of two witnesses.

FRANK J. MATCHETTE.

Witnesses:
CHAS. L. GOSS,
ARTHUR J. ZEALLEY.