April 22, 1952 H. J. BERNEY 2,594,115

ROTATABLY ADJUSTABLE ANTENNA

Filed May 22, 1950 4 Sheets-Sheet 1

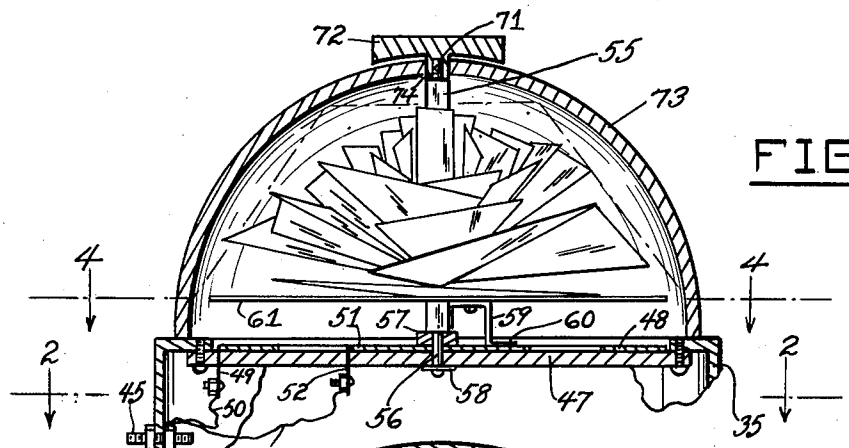

FIG. 1

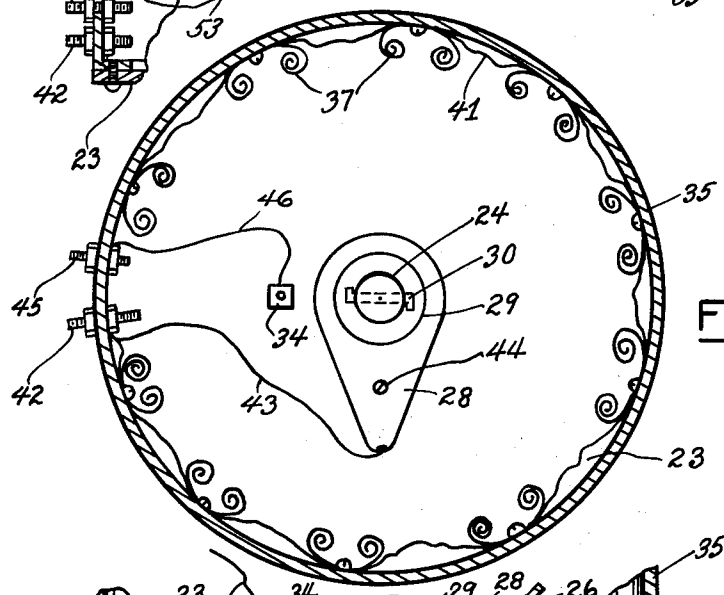

FIG. 2

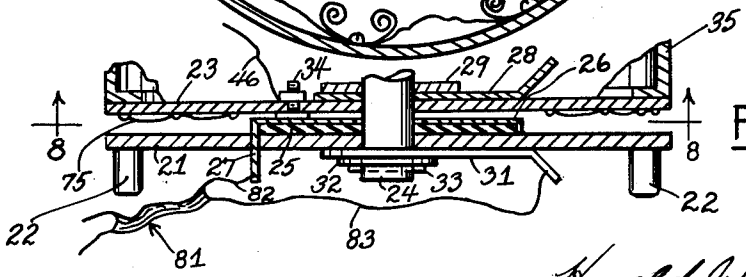

FIG. 3

INVENTOR
Harold J. Berney

BY Herman L. Gordon

ATTORNEY

ROTATABLY ADJUSTABLE ANTENNA

Filed May 22, 1950 4 Sheets-Sheet 2

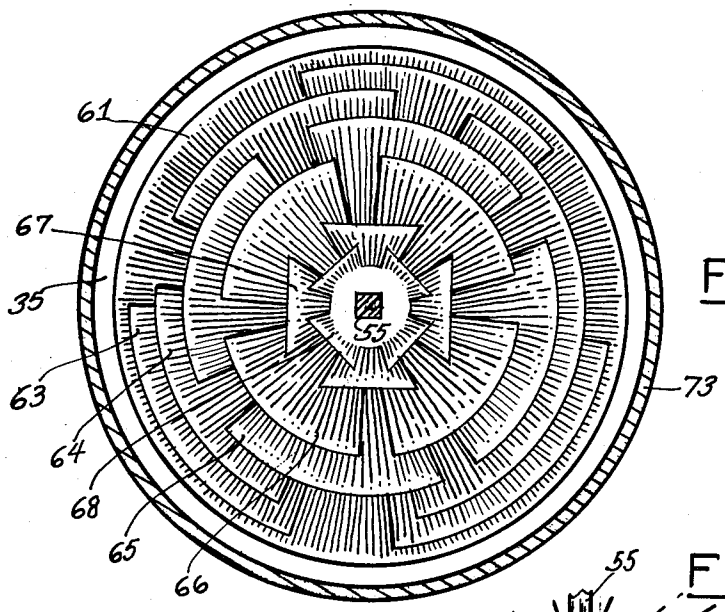

FIG. 4

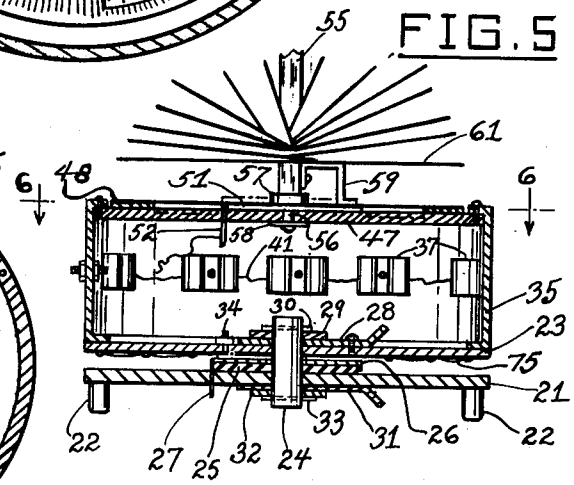

FIG. 5

FIG. 6

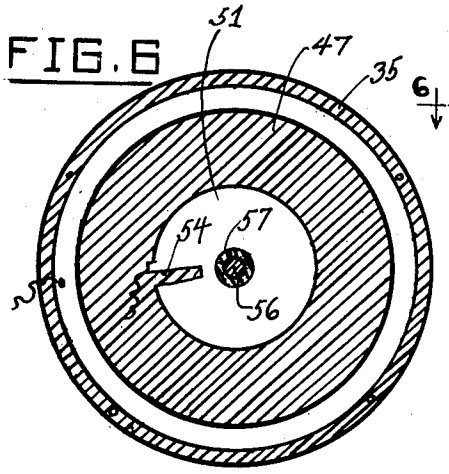

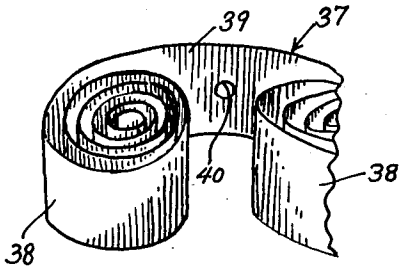

FIG. 7

INVENTOR
Harold J. Berney
BY Herman L. Gordon
ATTORNEY

April 22, 1952 H. J. BERNEY 2,594,115

ROTATABLY ADJUSTABLE ANTENNA

Filed May 22, 1950 4 Sheets-Sheet 3

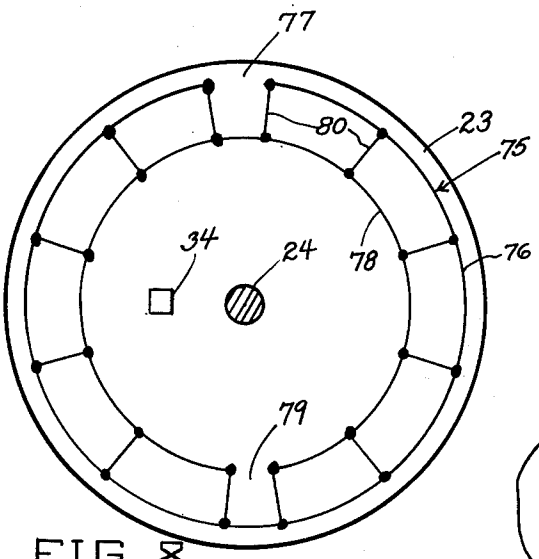

FIG. 8

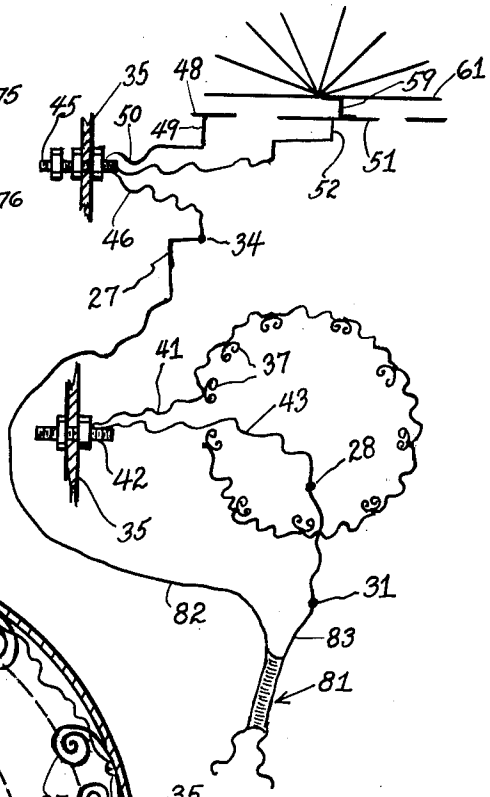

FIG. 10

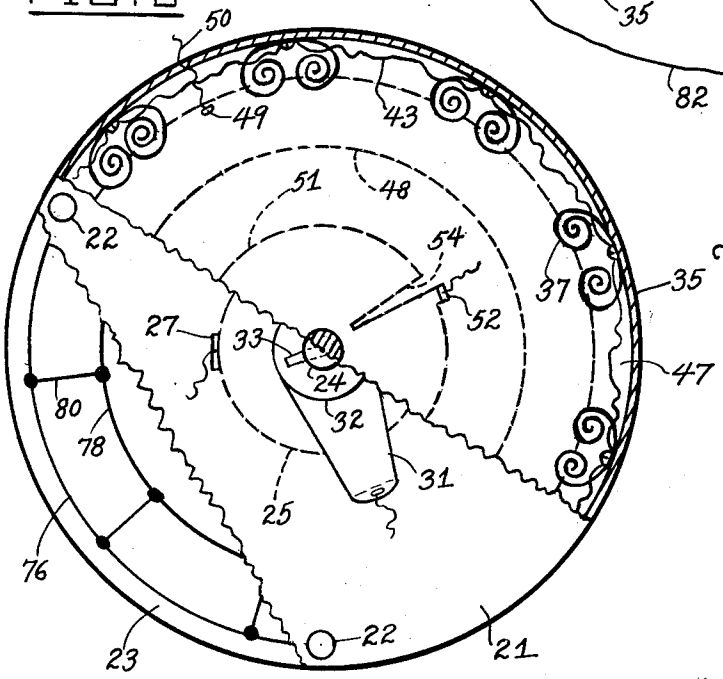

FIG. 9

INVENTOR
Harold J. Berney

BY Herman L. Gordon
ATTORNEY

ROTATABLY ADJUSTABLE ANTENNA

Filed May 22, 1950 4 Sheets-Sheet 4

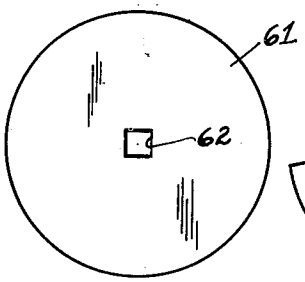

FIG. 11

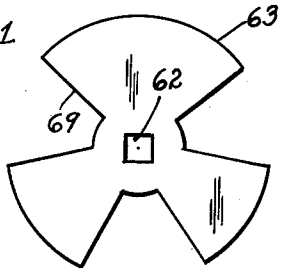

FIG. 12

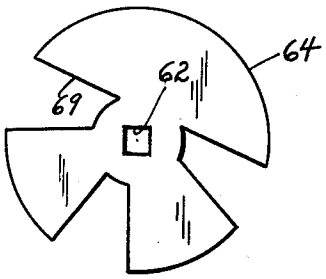

FIG. 13

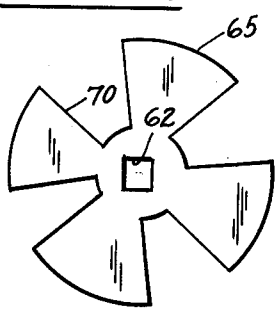

FIG. 14

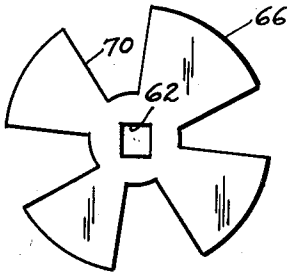

FIG. 15

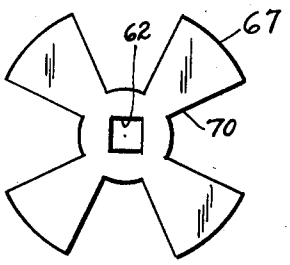

FIG. 16

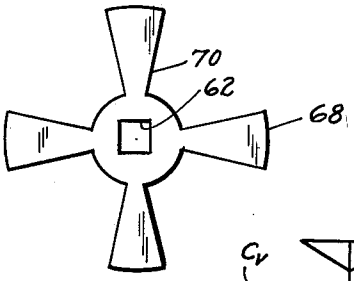

FIG. 17

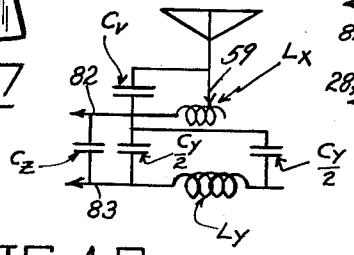

FIG. 19

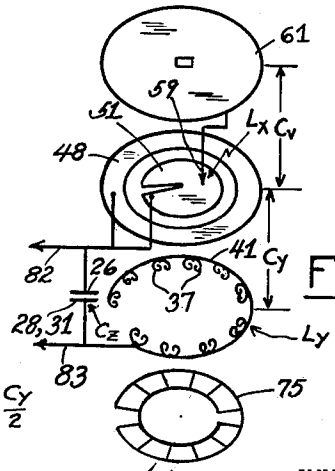

FIG. 18

INVENTOR.
Harold J. Berney
BY Herman L. Gordon
ATTORNEY

Patented Apr. 22, 1952 2,594,115

UNITED STATES PATENT OFFICE

2,594,115

ROTATABLY ADJUSTABLE ANTENNA

Harold J. Berney, Washington, D. C., assignor to Aberney Corporation, Bethesda, Md., a corporation of Maryland

Application May 22, 1950, Serial No. 163,351

10 Claims. (Cl. 250—33)

1

This invention relates to antenna devices for radio receiving equipment, and more particularly to an improved antenna for television and FM reception.

A main object of the invention is to provide a novel and improved antenna especially useful for receiving television and FM signals, said antenna being very compact in size, being simple to install and operate, and providing exceptionally high signal gain.

A further object of the invention is to provide an improved antenna especially suitable for use indoors for the reception of television and FM signals, said antenna involving relatively simple parts which are inexpensive to manufacture and assemble, being very rugged in construction, involving no moving parts, being attractive in appearance, and providing highly efficient reception even in heavily shielded locations.

A still further object of the invention is to provide an improved television and FM receiving antenna which is substantially non-directional in locations of fair signal intensity and which is very easy to adjust for maximum gain in locations of low signal intensity, the improved antenna being especially useful for indoor television reception, and providing high picture quality with maximum freedom from "ghosts" and other types of interference when so used.

A still further object of the invention is to provide an improved television and FM receiving antenna which embodies simple and effective adjusting means for tuning the antenna to resonance with a desired signal and for suitably orienting the antenna for maximum directional efficiency with respect to the transmitter of the desired signal.

Further objects and advantages of the invention will become apparent from the following description and claims, and from the accompanying drawings, wherein:

Figure 1 is a vertical cross-sectional view taken through the upper portion of an antenna constructed in accordance with the present invention.

Figure 2 is a horizontal cross-sectional view taken through the antenna, on the line 2—2 of Figure 1.

Figure 3 is a vertical cross-sectional view taken through the lower portion of the antenna.

Figure 4 is a horizontal cross-sectional view taken on line 4—4 of Figure 1.

Figure 5 is a vertical cross-sectional view taken through the antenna of Figure 1, but with the top cover and top knob omitted.

Figure 6 is a horizontal cross-sectional view taken on line 6—6 of Figure 5.

2

Figure 7 is an enlarged fragmentary perspective detail view of one of the coil elements employed in the antenna of the present invention.

Figure 8 is a cross-sectional detail view taken on line 8—8 of Figure 3, showing the reflector network employed in the antenna of the present invention.

Figure 9 is a bottom plan view of the antenna with parts broken away to show details of construction.

Figure 10 is a schematic wiring diagram of the main signal-collecting portion of the antenna of the present invention.

Figures 11 to 17 are plan detail views of the signal-collecting plates employed in the antenna of the present invention.

Figure 18 is a schematic view showing the electrical relationships of certain portions of an antenna constructed in accordance with the present invention.

Figure 19 is a simplified equivalent circuit of the arrangement shown in Figure 18.

Referring to the drawings, 21 designates a rigid circular base member of insulating material, such as plastic, or the like, provided with the depending supporting legs 22. Designated at 23 is another rigid circular plate member of insulating material located above and parallel to base 21. A large vertical metal shaft member 24 extends through the centers of the base 21 and the plate member 23. Interposed between the members 21 and 23, and surrounding shaft member 24 are an insulating disc 25 and a substantially circular metal plate 26 secured on disc 25 and provided with a depending terminal lug 27 which extends through base member 21. Designated at 28 is a large metal terminal lug engaged around the upper portion of shaft member 24 and bearing on plate member 23. A large metal washer 29 encircles shaft member 24 above lug 28. The top end of shaft member 24 is provided with a transverse locking pin 30 which bears downwardly on the washer 29. Designated at 31 is a large metal terminal lug engaged on the lower portion of shaft member 24 subadjacent the base member 21. Encircling the shaft member below terminal lug 31 is a large metal washer 32. The bottom end of shaft member 24 is provided with a transverse locking pin 33 which bears upwardly on the washer 32. The plate member 23 is rotatable on the shaft member 24.

Designated at 34 is a contact terminal which is secured to the plate member 23 and which makes sliding contact with the peripheral portion of the top surface of the circular metal plate 26.

Secured on the plate member **23** is a large annular shell member **35** of insulating material, such as plastic, or the like. Secured to the cylindrical inside wall surface of the shell member **35** are the spaced metal coiled ribbon members **37**, each ribbon member **37** being spirally coiled at its opposite end portions, as shown at **38**, **38** in Figure 7, and being arcuately curved at its intermediate portion, as shown at **39**. Portion **39** is formed with an aperture **40** through which may pass a bolt or rivet securing the ribbon member to the inside wall surface of shell **35** in the manner shown in Figure 5. The ribbon members **37** are located substantially in the same horizontal plane, as viewed in Figure 5, and are substantially uniformly spaced. In the typical embodiment of the invention herein illustrated, there are ten metal ribbon members **37**. The center points of the ribbon members are interconnected by a conductor **41** in the manner shown in Figure 10, the conductor **41** terminating at the tenth ribbon member **37**, as shown in said figure. The opposite end of the conductor **41** is connected to a terminal stud **42** secured to the wall of shell **35**. The terminal lug **28** is also connected to terminal stud **42**, by a conductor **43**. Lug **28** is rigidly secured to the plate member **23**, as by a screw **44**.

Secured to the wall of shell **35** adjacent terminal stud **42** is another terminal stud **45**. Contact terminal **34** is connected to stud **45** by a conductor **46**.

Secured to the top rim of the shell member **35** is a circular plate member **47** of insulating material, such as plastic, or the like. Secured on plate member **47** is a large flat annular metal ring **48** provided with a depending terminal lug **49** which extends through plate member **47** and is connected to terminal stud **45** by a conductor **50**. Secured on plate member **47** concentrically with ring **48** is a large substantially circular metal plate **51** provided with a depending terminal lug **52** connected to stud **45** by a conductor **53**. The plate **51** is formed adjacent lug **52** with a radial notch **54** of substantial length, as shown in Figure 9.

Designated at **55** is a vertical squared shaft member of insulating material formed at its lower end with a reduced stud portion **56** of circular cross-section, which extends rotatably through a bearing collar **57** and through the centers of the metal plate **51** and the insulating plate **47**. Secured to the end of stud portion **56** is a bearing collar **58**, whereby the shaft **55** is rotatably secured in a vertical upstanding position with respect to plate **47**. Secured to the lower portion of squared shaft **55** is a metal Z-bracket **59** having a lower horizontal arm **60** slidably engaging the peripheral portion of the top surface of the notched plate **51**. Mounted on the squared shaft **55** and secured to the top arm of bracket **59** is a circular thin metal plate **61**, shown in Figure 11. As shown in Figure 11, circular plate **61** is formed with a square central aperture **62** adapted to fit the squared shaft **55**. Designated at **63** to **68** in Figures 12 to 17 are respective additional thin metal plates adapted to be successively disposed over the plate **61** on the shaft **55**, each of said plates **63** to **68** being formed with a square central aperture **62** fitting the squared shaft **55**. The thin metal plates **63** and **64** are each formed with three large notches **69** arranged as shown in Figures 12 and 13, and the metal plates **65** to **68** are each formed with four large notches **70** arranged as shown in Figures 14 to 17. The notches **69** and **70** vary in size and in orientation around the squared central openings **62** of the plates **63** to **68**, defining upwardly bendable plate segments on the respective plates. Said segments are bent upwardly to define a resultant rose-like configuration, as shown in Figures 1 and 4, the segments of the uppermost plate member **68** being bent upwardly at the steepest inclination and the segments of the plates **67** to **63** being bent upwardly at gradually decreasing angles. The lowermost plate **61** is substantially horizontal.

The top end of shaft **55** is formed with a reduced stud portion **71** to which is secured a knob **72**. Designated at **73** is a dome or cover of insulating material, such as plastic or the like, which is secured to the top rim of shell **35**. The top of cover **73** is formed with an aperture through which the shank **74** of the knob rotatably extends.

Secured to the bottom surface of the insulating plate member **23** is a circularly arranged reflector network designated generally at **75**. Said network comprises an outer, generally circular conductor **76**, open at **77**, and an inner substantially circular conductor **78** arranged concentrically with conductor **76** and open at **79**, at a location diametrically opposite the gap **77** of conductor **76**. The conductors **76** and **78** are connected at spaced intervals thereon by radial conductors **80**, arranged as shown in Figure 8.

The antenna lead-in is designated at **81** and may comprise conventional 300-ohm transmission line. One of the conductors of the line, designated at **82**, is connected to the depending lug **27** and the other conductor of the line, designated at **83**, is connected to lug **31**.

Figures 18 and 19 illustrate in a highly simplified form the electrical relationships of the various main elements of the antenna. As illustrated, the plate **61** and the flat annular ring **48** define between them the capacity C_v. The radially slotted plate **51** defines an inductance L_x, slidably engaged by the tap **59**. The flat ring **48** and the conductor **41**, connecting the coiled ribbon members **37**, define between them the distributed capacitance C_y. The conductor **41** and the ribbon members **37** define an inductance L_y. A capacitance C_z is also defined between the terminal plate **26** and the terminal lugs **28** and **31**. Figure 19 shows the electrical connections of the elements C_v, L_x, L_y, C_z and C_y. Since C_y is distributed, one-half of C_y may be considered as connected between one terminal of L_y and the line wire **82**, and the other half of C_y may be considered as connected between the other terminal of L_y and line wire **82**. The combination of C_z, C_y and L_y, as shown in Figure 19, provides a terminating impedance or transformer matching the antenna to the transmission line. Connected in parallel between the signal-collecting plates and the line wire **82** are C_v and the variable inductance L_x. By varying L_x the antenna may be resonated to the desired channel frequency. This is done by rotating the knob **72**.

Although the antenna unit herein described does not have the sharply defined directional characteristics of the conventional dipole or folded dipole type of antenna, due to the upwardly and outwardly radially diverging arrangement of the segments of the plates **63** to **68**, the antenna unit will be directional to a certain degree, depending on the particular relative orientations of said segments. Therefore, after the antenna has been tuned to resonance with the channel frequency of the desired transmitting station by means of the knob **72**, in order to obtain maximum signal strength at the output

terminals of the antenna, the shell 35 may be rotated relative to the base plate 21 to establish the optimum directional position of the signal-collecting portion of the antenna unit. In locations of relatively high signal strength it may be unnecessary to make either of the above adjustments. In unfavorable locations, such as in low-lying areas, or in buildings containing large amounts of metal in their framework, one or both of the above adjustments may be necessary to provide satisfactory signal strength at the output terminals of the antenna unit.

The transmission line 81 may be connected to the terminal studs 42 and 45 instead of to the lugs 27 and 31. This will provide satisfactory reception in most cases. However, it has been found by actual experiment that optimum reception will be obtained by connecting the transmission line to the lugs 27 and 31, as illustrated.

The assembled unit is quite compact and may be designed to measure substantially less than one foot in overall height and width. The unit is very light in weight, and since it is substantially completely housed, is not readily subject to damage. The exterior of the unit may be suitably decorated, and presents a generally graceful and pleasing appearance, entirely free of the elongated rods and projections which characterize most indoor television antennas of the prior art.

While a specific embodiment of an improved antenna unit for television and FM reception has been disclosed in the foregoing description, it will be understood that various modifications within the spirit of the invention may occur to those skilled in the art. Therefore it is intended that no limitations be placed on the invention except as defined by the scope of the appended claims.

What is claimed is:

1. In an antenna unit, a support, a flat conductive element secured on said support, a metal disc secured on said support adjacent said flat conductive element, said disc being formed with a radial slot, defining an inductance, a signal collecting electrode, means rotatably supporting said electrode adjacent said element for rotation around the axis of said disc, said electrode defining a capacitance with respect to said element, conductive means connecting the element to the disc, a contact member connected to the electrode and slidably engaging said disc, acting as a sliding tap to vary the amount of said inductance connected in parallel with said capacitance responsive to rotation of said electrode, an output terminal connected to said conductive means, the capacitance and the variable inductance being arranged to tune the antenna unit substantially to resonance with an incoming signal, a second output terminal, and means for coupling the second output terminal to the electrode.

2. In an antenna unit, a support, a conductive ring secured on said support, a metal disc secured on said support inside said ring, said disc being formed with a radial slot, defining an inductance inside said ring, a signal collecting electrode, means rotatably supporting said electrode adjacent said ring for rotation around the axis of said disc, said electrode defining a capacitance with respect to said ring, conductive means connecting the ring to the disc, a contact member connected to the electrode and slidably engaging said disc, acting as a sliding tap to vary the amount of said inductance connected in parallel with said capacitance responsive to rotation of said electrode, an output terminal connected to said conductive means, the capacitance and the variable inductance being arranged to tune the antenna unit substantially to resonance with an incoming signal, a second output terminal, and means for coupling the second output terminal to the electrode.

3. An antenna unit comprising a hollow member of insulating material, a conductor secured in said hollow member around the interior thereof, defining a first inductance, a first output terminal connected to said conductor, a conductive ring, means supporting said ring adjacent said conductor, defining a distributed capacitance between the conductor and the ring, a metal disc, means supporting said disc inside said ring, said disc being formed with a radial slot, defining a second inductance inside said distributed capacitance, a signal collecting electrode, means rotatably supporting said electrode adjacent said ring for rotation around the axis of said disc, said electrode defining a second capacitance with respect to said ring, conductive means connecting the ring to said disc, a contact member connected to said electrode and slidably engaging said disc, acting as a sliding tap to vary the amount of said second inductance connected in parallel with said second capacitance responsive to rotation of said electrode, and a second output terminal connected to said conductive means, the second capacitance and the variable second inductance being arranged to tune the antenna unit substantially to resonance with an incoming signal, and the distributed capacitance and the first inductance being arranged to match the antenna unit to a transmission line connected to said output terminals.

4. An antenna unit comprising a hollow member of insulating material, a conductor secured in said hollow member around the interior thereof, defining a first inductance, a first output terminal connected to said conductor, a conductive ring, means supporting said ring adjacent said conductor, defining a distributed capacitance between the conductor and the ring, a metal disc, means supporting said disc inside said ring, said disc being formed with a radial slot, defining a second inductance inside said distributed capacitance, a shaft member, means rotatably supporting said shaft member concentrically with said disc, a signal-collecting electrode secured to said shaft member, extending adjacent said ring and defining a second capacitance with respect to said ring, conductive means connecting the ring to the disc, a contact member connected to said electrode and slidably engaging said disc, acting as a sliding tap to vary the amount of said second inductance connected in parallel with said second capacitance responsive to rotation of said shaft member, and a second output terminal connected to said conductive means, the second capacitance and the variable second inductance being arranged to tune the antenna unit substantially to resonance with an incoming signal, and the distributed capacitance and first inductance being arranged to match the antenna unit to a transmission line connected to said output terminals.

5. An antenna unit comprising a support, a hollow member of insulating material rotatably mounted on said support, a conductor secured in said hollow member extending around the interior thereof, defining a first inductance, a first

output terminal connected to one end of said conductor, a conductive ring secured to said hollow member adjacent said conductor, defining a distributed capacitance with respect to said conductor, a metal disc secured to said hollow member inside said ring, said disc being formed with a radial slot, defining a second inductance inside said distributed capacitance, a shaft member of insulating material rotatably secured to said hollow member concentrically with said disc, a metal plate member secured to said shaft member and extending adjacent said ring, said plate member defining a signal-collecting electrode and having a second capacitance with respect to said ring, conductive means connecting the ring to said disc, a metal contact member connected to said plate member and slidably engaging said disc, acting as a sliding tap to vary the amount of said second inductance connected in parallel with said second capacitance responsive to rotation of said shaft member, and a second output terminal connected to said conductive means, the second capacitance and the variable second inductance being arranged to tune the antenna unit substantially to resonance with an incoming signal, and the distributed capacitance and first inductance being arranged to match the antenna unit to a transmission line connected to said output terminals.

6. An antenna unit comprising a support, an annular shell of insulating material rotatably mounted on said support, a conductor secured in said shell and extending around its interior surface, defining a first inductance, a first output terminal connected to one end of said conductor, a wall of insulating material secured on said shell, a flat annular metal ring secured on said wall and being parallel to said conductor, defining a distributed capacitance with respect to said conductor, a metal disc secured on said wall inside said ring, said disc being formed with a radial slot, defining a second inductance inside said distributed capacitance, a post member of insulating material rotatably mounted on said wall concentrically with said disc, a thin metal plate member carried by said post member and extending adjacent said ring, said plate member defining a signal-collecting electrode and having a second capacitance with respect to said ring, conductive means connecting the annular ring to the disc, a metal contact member connected to said plate member and slidably engaging said disc, acting as a sliding tap to vary the amount of said second inductance connected in parallel with the second capacitance responsive to rotation of said post member, and a second output terminal connected to said conductive means, the second capacitance and the variable second inductance being arranged to tune the antenna unit substantially to resonance with an incoming signal, and the distributed capacitance and the first inductance being arranged to match the antenna unit to a transmission line connected to said output terminals.

7. An antenna unit comprising a support, an annular shell of insulating material rotatably mounted on said support, a conductor secured in said shell and extending around its interior surface, defining a first inductance, a plurality of coiled ribbon-like metal members secured to said interior surface at spaced points along said conductor, a first output terminal connected to one end of said conductor, a wall of insulating material secured on said shell, a flat annular metal ring secured on said wall and being parallel to said conductor, defining a distributed capacitance with respect to said conductor and ribbon-like metal members, a metal disc secured on said wall inside said ring, said disc being formed with a radial slot, defining a second inductance inside said distributed capacitance, a post member of insulating material rotatably mounted on said wall concentrically with said disc, a thin metal plate member carried by said post member and extending adjacent said ring, said plate member defining a signal-collecting electrode and having a second capacitance with respect to said ring, conductive means connecting the annular ring to the disc, a metal contact member connected to said plate member and slidably engaging said disc, acting as a sliding tap to vary the amount of second inductance connected in parallel with the second capacitance responsive to rotation of said post member, and a second output terminal connected to said conductive means, the second capacitance and the variable second inductance being arranged to tune the antenna unit substantially to resonance with an incoming signal, and the distributed capacitance and first inductance being arranged to match the antenna unit to a transmission line connected to said output terminals.

8. An antenna unit comprising a support, an annular shell of insulating material rotatably mounted on said support, a conductor secured in said shell and extending around its interior surface, defining a first inductance, a plurality of coiled ribbon-like metal members secured to said interior surface at spaced points along said conductor, a wall of insulating material secured on said shell, a flat annular metal ring secured on said wall and being parallel to said conductor, defining a distributed capacitance with respect to said conductor and ribbon-like metal members, a metal disc secured on said wall inside said ring, said disc being formed with a radial slot, defining a second inductance inside said distributed capacitance, a post member of insulating material rotatably mounted on said wall concentrically with said disc, a thin metal plate member carried by said post member and extending adjacent said ring, said plate member defining a signal-collecting electrode and having a second capacitance with respect to said ring, conductive means connecting the annular ring to the disc, a metal contact member connected to said plate member and slidably engaging said disc, acting as a sliding tap to vary the amount of said second inductance connected in parallel with said second capacitance responsive to rotation of said post member, a second output terminal connected to said conductive means, the second capacitance and the variable second inductance being arranged to tune the antenna unit substantially to resonance with an incoming signal, and the distributed capacitance and first inductance being arranged to match the antenna unit to a transmission line connected to said output terminals, and an annularly arranged reflector network secured to the shell parallel to the thin metal plate member, said reflector network comprising an outer open conductor extending concentrically around the axis of said shell, an inner open conductor within said outer conductor and extending concentrically around said axis, the gap in the inner conductor being diametrically opposite the gap in the outer conductor, and a plurality of spaced radial conductors connecting the inner and outer conductors.

9. An antenna unit comprising a support, an

annular shell of insulating material rotatably mounted on said support, a conductor secured in said shell and extending around its interior surface, defining a first inductance, a first output terminal connected to one end of said conductor, a wall of insulating material secured on said shell, a flat annular metal ring secured on said wall and being parallel to said conductor, defining a distributed capacitance with respect to said conductor, a metal disc secured on said wall inside said ring, said disc being formed with a radial slot, defining a second inductance inside said distributed capacitance, a post member of insulating material rotatably mounted on said wall concentrically with said disc, a thin metal plate member carried by said post member and extending adjacent said ring, a plurality of additional thin metal plate members secured to said post member above said first-named plate member and being in electrical contact with each other and with the first-named plate member, said additional plate members being each formed with a plurality of large notches, defining outwardly extending segments on the plate members, said segments being inclined upwardly and outwardly, the segments of the upper plate members being inclined at steeper angles than the segments of the lower plate members, to define a rose-like configuration, said configuration of plate members defining a signal-collecting electrode and having a second capacitance with respect to said ring, conductive means connecting the annular ring to the disc, a metal contact member connected to said first-named plate member and slidably engaging said disc, acting as a sliding tap to vary the amount of said second inductance connected in parallel with said second capacitance responsive to rotation of said post member, and a second output terminal connected to said conductive means, the second capacitance and the variable second inductance being arranged to tune the antenna unit substantially to resonance with an incoming signal, and the distributed capacitance and the first inductance being arranged to match the antenna unit to a transmission line connected to said output terminals.

10. In an antenna unit, a support, a flat conductive element mounted on said support, a metal disc mounted on said support adjacent said conductive element, said disc being formed with a slot beginning at and extending inwardly a substantial distance from its periphery to define an inductance, a signal-collecting electrode, means rotatably supporting said electrode adjacent said element and disc for rotation substantially around the axis of the disc, said electrode defining a capacitance with respect to the flat conductive element, conductive means connecting the element to the disc, a contact member connected to the electrode and slidably engaging said disc, said contact member being arranged relative to said disc to act as a sliding tap to vary the amount of inductance connected in parallel with said capacitance responsive to rotation of said electrode, a first output terminal connected to said conductive means, the capacitance and the variable inductance being arranged to tune the antenna unit substantially to resonance with an incoming signal, a second output terminal, and means coupling the second output terminal to the signal-collecting electrode.

HAROLD J. BERNEY.

REFERENCES CITED

The following references are of record in the file of this patent:

UNITED STATES PATENTS

Number	Name	Date
1,689,629	Haworth	Oct. 30, 1928
2,204,286	Stevens	June 11, 1940
2,351,723	Vogel	June 30, 1944