Aug. 16, 1966 A. C. BREINER ETAL 3,267,302

APPARATUS AND METHOD OF CONTACT CONDITIONING

Filed Dec. 18, 1963

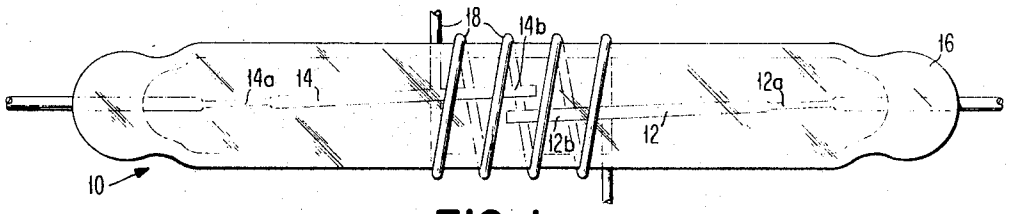

FIG. 1

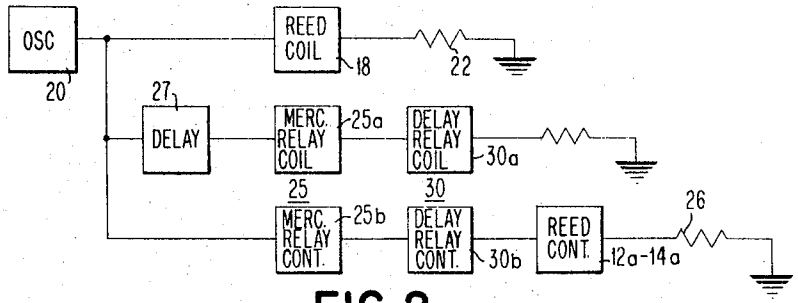

FIG. 2

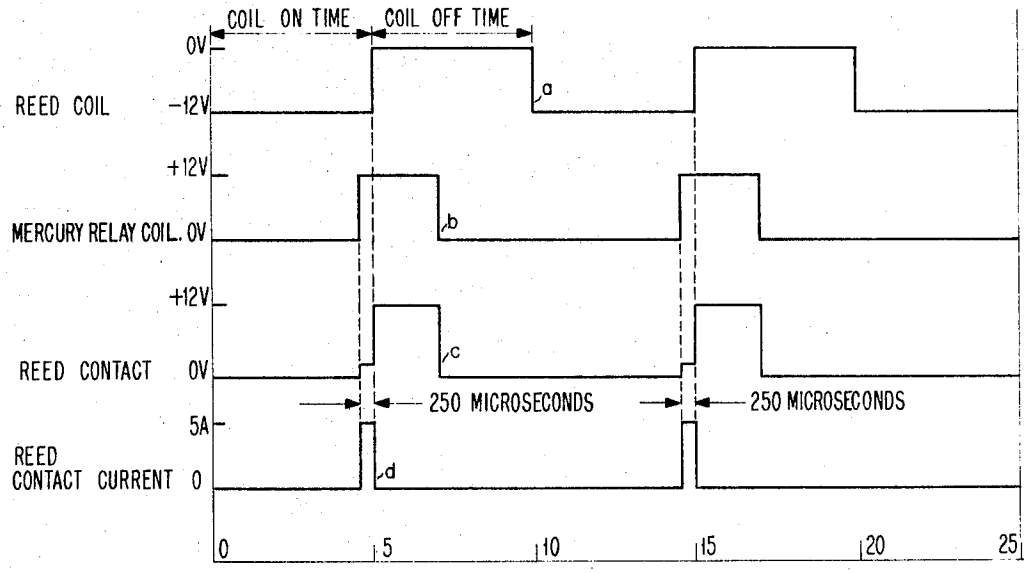

FIG. 3

INVENTORS
ARTHUR C. BREINER
ERNEST G. SARTELLE
BY Francis V. Giolma
ATTORNEY

United States Patent Office 3,267,302 Patented August 16, 1966

3,267,302

APPARATUS AND METHOD OF CONTACT CONDITIONING

Arthur C. Breiner, Burlington, and Ernest G. Sartelle, Essex Junction, Vt., assignors to International Business Machines Corporation, New York, N.Y., a corporation of New York

Filed Dec. 18, 1963, Ser. No. 331,463
7 Claims. (Cl. 307—137)

The present invention relates generally to switches and it has reference in particular to apparatus and a method for conditioning the contacts of reed type switches.

In accordance with a preferred embodiment of the invention, the contacts of a reed type switch are conditioned by operating the switch to interrupt a current in excess of the maximum rating of the switch. The coil of a reed switch which is to be conditioned is energized from a square-wave generator to open and close the contacts at a frequency of 100 times per second. A mercury-wetted-contact relay is connected to the square-wave generator through a delay circuit for completing a circuit through the reed contacts while they are closed, and about 250 microseconds before they open. A timing relay also energized from the square-wave generator is arranged to interrupt the circuit through the reed switch contacts at the end of a one second interval.

One object of the invention is to provide for improving the reliability of reed switches.

Another object of the invention is to provide for repeatedly interrupting currents in excess of the rated capacity of a reed switch to condition the contacts.

It is also an object of the invention to provide a plurality of extremely short duration current conducting periods within a predetermined time for improving the performance of a reed switch.

Yet another object of the invention is to provide for periodically operating a reed switch to interrupt a current in excess of the switch capacity and for completing the circuit through the contacts externally of the contacts.

An important object of this invention is to provide for conditioning reed switch contacts that have been gold-plated and heat-treated to diffuse the gold, by operating the switch repeatedly and interrupting a current greatly in excess of the rated current, while limiting the conducting periods to an extremely short time interval.

It is an object of the invention to provide for conditioning the diffused gold contact surfaces of a switch having a pair of magnetic reed contact elements sealed in a glass envelope, by operating the switch to interrupt currents greatly in excess of the rated capacity of the switch, while controlling the duration of the periods of conductivity, and the frequency thereof.

Another important object of the invention is to provide for conditioning the contacts of a reed switch by cyclically conducting currents through the contacts greatly in excess of the rated capacity of the contacts and then interrupting said currents after a predetermined interval of conduction.

It is also an object of this invention to provide for using an oscillator to cyclically open and close the contacts of a reed switch for predetermined timed intervals, and for using other switch means for completing the circuit through the contacts a predetermined time prior to their opening at the end of each closed interval.

Another object of the invention is to provide for cyclically operating the contacts of a reed switch, and for using additional switch means for completing a circuit through the contacts while they are closed for a predetermined number of relatively short intervals at a predetermined frequency.

The foregoing and other objects, features and advantages of the invention will be apparent from the following more particular description of a preferred embodiment of the invention, as illustrated in the accompanying drawings.

In the drawings:

FIG. 1 is an enlarged schematic showing of a reed switch of the type with which the invention is concerned together with an operating winding therefor;

FIG. 2 is a schematic block diagram showing the arrangement of the reed switch and related apparatus in accordance with the teachings of the invention; and

FIG. 3 shows a plurality of time curves illustrating the operation of the apparatus in FIG. 2.

Referring particularly to FIG. 1 of the drawing, it will be seen that a dry reed switch **10** comprises two overlying reeds **12** and **14** hermetically sealed in a generally cylindrical glass envelope **16** which may contain a nitrogen atmosphere. When subjected to an externally applied magnetic field such as by means of an operating winding **18**, the reeds are attracted to each other to complete an electrical circuit between the overlapping contact portions **12***b* and **14***b*. These reeds are essentially cantilever beams supported at their nonadjacent ends by being sealed in the ends of the glass envelope. To assure that the reeds **12** and **14** will tend to pivot relative to a predetermined point, each reed is "coined" as at **12***a* and **14***a* to provide "hinge points" at a predetermined distance back from what will be the free end of the encapsulated reed, and the reed is pressure-formed at these points to provide a widened section of reduced thickness.

The reeds **12** and **14** are made from a nickel-iron alloy comprising approximately .1% carbon, .5% manganese, .25% silicon, 51% nickel and the balance iron. The contact areas of each reed are electroplated in an acid solution of gold to provide a plating having a thickness on the order of 80 to 200 millionths of an inch. After plating the contact areas with this solution, the plating is diffused into the contact area by heating the plated reeds in an oven to a temperature of approximately 1700° and then cooling them to provide an over-all cycle of approximately 17 minutes. This procedure provides a diffused gold-nickel-iron alloy contact surface having a depth on the order of 300 to 500 microinches, which proves highly desirable as a contact surface.

It has been found that the performance of reed switches having this type of contact surface may be greatly improved by conditioning the contacts through interrupting a current greatly in excess of the normal rated capacity of the switch, after permitting such current to flow for an extremely short interval, and continuing this operation for a large number of closely repeated cycles. For example, it has been found that by subjecting the contacts of a reed switch having a normal rating on the order of 50 to 200 milliamperes to a current of approximately five amperes, for a period of 250 microseconds duration, at a frequency of 100 cycles per second for a time of one second, such contacts have a much higher reliability, which in some instances is increased by a factor of 10 over that of the same type of reed switch which is not subjected to such contact conditioning.

Referring to FIG. 2, it will be seen that the operating winding **18** of the reed switch may be energized as shown by the curve (*a*) of FIG. 3, being connected to a suitable source of substantially square-wave electrical energy, being for example connected to a teletronic 105 generator having a frequency of 100 cycles per second. Suitable load means such as a resistor **22** is connected in circuit with the winding **18** for limiting the current therethrough to the rated value.

In order to provide for interrupting a current through the contacts of the reed switch **10**, without subjecting the contacts to the duty of closing of the circuit, suitable switch means such as a well-known mercury type relay **25** having an operating winding **25***a* and contacts **25***b* may be utilized in conjunction with a load resistor **26** for limiting the current to about five amperes. The operating winding **25***a* is connected to the oscillator **20** through a delay device **27**, so that the contacts **25***b* of the relay, which are connected in series with the contacts **12***b* and **14***b* of the reed switch will be closed approximately 250 microseconds before the reed contacts are opened, as shown by the curves (*b*) and (*c*) of FIG. 3. This means that the current through the reed contacts may be represented by the curve (*d*) of FIG. 3, and comprises a five ampere pulse having a duration on the order of 250 microseconds.

For the purpose of limiting the over-all duration of this reed conditioning process a suitable time delay relay **30** having operating winding **30***a* and contacts **30***b* may be utilized. The operating winding **30***a* of the delay relay is connected in circuit with the operating winding **25***a* of the mercury relay, the delay device **27**, while the contacts **30***b* are connected in series with the reed switch contacts **12***b*–**14***b* and the contacts **25***b* of the mercury switch. The delay switch **30** may be of any well-known type such as an Agastat delay relay having an operating time on the order of one second before the contacts open.

With the above-described circuit connections, the contacts **12***b* and **14***b* of the reed switch **10** will be subjected to a repeated cycling for 100 cycles of a 250 microsecond pulse of current, having a value of approximately five amperes. This type of conditioning has been found to be of advantage in the commercial production of reed switches. After such an operation was completed on sample of 20 switches, they were placed on a life test robot and cycled under the same conditions as normal reed switches. The mean time to first failure and the reliability of this group of switches was increased by a factor on the order of 10. Further tests of switches manufactured with and without the high current test were made, and the life test results showed that the group with the contact conditioning inevitably had a higher reliability. The optimum cycle appears to consist of breaking a current of five amperes with the reed contacts for one second while the coil driving the reed switch is pulsed at 100 times per second for a 50% duty cycle. The reed contacts carry high current for approximately 250 microseconds before opening. This timing is the most critical part of the operation since the reed contacts would be completely destroyed if they carried five amperes for too long a period of time. It appears that the surface alloy on the contacts, which is prediffused, forms a harder alloy on the surface, and this hardened area provides increased reliability. Causing the contacts to carry the high current for an excessive period of time defeats the purpose of the conditioning test. The best results appear to be obtained when the current is five amperes, $\pm 10\%$, the frequency of operation is 100 cycles $\pm 10\%$ and the duration of the current pulses ranges from 200 to 500 microseconds. Contacts thus conditioned appear to have a much greater reliability than those which are merely cycled without load to merely work or condition the contact surface, or are cycled at lower values of current and/or fewer cycles.

From the above description and accompanying drawings, it is apparent we have provided a simple and effective manner for improving the reliability of dry reed type switches. The conditioning process lends itself to automation since the contacts are rapidly cycled for a relatively short over-all elapsed time interval. An important feature of the invention is that the current through the contacts is merely interrupted, and the circuit is never completed by the reed switch contacts, being instead completed externally of the reed switch contacts so as to provide a relatively short, accurately timed, conducting interval for a predetermined number of cycles.

While the invention has been particularly shown and described with reference to a preferred embodiment thereof, it will be understood by those skilled in the art that various changes in form and details may be made therein without departing from the spirit and scope of the invention.

What is claimed is:

1. In combination,

(a) a reed switch having a pair of gold plated nickel-iron reed contacts mounted at opposite ends of an envelope,

(b) an operating winding for said contacts,

(c) means connecting the winding to a pulse generator for opening and closing said contacts at a predetermined frequency,

(d) switch means having contact means with operating means for opening and closing said contact means to open and close,

(e) circuit means connecting the reed contacts and said contact means to a source of electrical energy for passing through the contacts a current in excess of the rated contact current, and

(f) additional circuit means connecting the operating means of said switch means to said pulse generator for closing the contact means of the switch means a predetermined time just prior to opening of the reed contacts.

2. In combination,

(a) a reed switch comprising an envelope with a pair of magnetically deflectable reed contacts of a nickel-iron composition with a diffused gold plating mounted at opposite ends therein,

(b) an operating winding positioned about said reed contacts for closing said contacts,

(c) circuit means connecting the operating winding to a pulse generator for closing and opening said contacts at predetermined time intervals,

(d) switch means having normally open contact means and an operating winding for closing said contact means,

(e) circuit means including a delay device connecting the switch means operating winding to the pulse generator, and

(f) additional circuit means connecting the reed contacts and normally open switch contact means to the pulse generator for passing pulses of current through the reed contacts substantially in excess of the rated contact current.

3. In combination,

(a) a reed switch having an elongated envelope with a pair of deflectable nickel-iron reed contacts mounted therein at opposite ends and extending longitudinally thereof to provide overlapping contact areas which have diffused gold surfaces,

(b) an operating winding disposed about said contacts,

(c) source means for applying cyclic pulses to said winding to open and close said contacts,

(d) switch means having normally open contacts connected in series with the reed switch contacts and the pulse source means and an operating winding for opening said contacts,

(e) additional switch means having normally closed contacts connected in circuit with the reed switch contacts and switch means contacts and having an operating winding for opening said normally closed contacts after a predetermined time of energization, and

(f) means including a delay device connecting the operating windings of the switch means and the additional switch means to said pulse source means.

4. In a method of pre-conditioning the contact surfaces of a reed switch prior to normal use, said reed

switch having an elongated envelope with a pair of deflectable nickel-iron contacts mounted at opposite ends and extending longitudinally therein to provide overlapping contact areas which have diffused gold surfaces, the steps comprising,

(a) subjecting the contacts to a pulsing magnetic field to cyclically open and close said contacts,

(b) repeatedly connecting the contacts to a source of electrical energy immediately prior to their opening to interrupt a current in excess of their rated carrying capacity, and

(c) interrupting the connection of the contacts to the source after a predetermined number of such interruptions.

5. The method of pre-conditioning diffused gold contact surfaces of a pair of nickel-iron contacts in a reed switch during manufacture and prior to normal use which comprises the steps of,

(a) placing an operating winding about the reed switch,

(b) connecting the operating winding to a 100 cycle per second pulse source,

(c) connecting the contact of a normally open switch device in series with the reed switch contacts and the pulse source,

(d) connecting the operating winding of the switch device to the pulse source through a delay device so as to close the normally open switch contacts to connect the reed switch contacts to the source just prior to termination of each source pulse, and

(e) interrupting the connection of the reed switch contacts and the source at the end of a predetermined interval.

6. In a method of pre-conditioning diffused gold contact surfaces of a pair of nickel-iron alloy contacts in a reed switch prior to normal use, the steps comprising,

(a) placing the contacts in a pulsating magnetic field

to close and open said contacts at approximately 100 times per second,

(b) using switch means to repeatedly connect the contacts to a pulse source for subjecting the contacts to a current of at least ten times their normal rated current for approximately 250 microseconds before they open in each cycle, and

(c) using time delay means for interrupting the connection of the contacts to the pulse source after approximately 100 cycles of operation.

7. In a method of pre-conditioning diffused gold contact surfaces of a pair of nickel-iron alloy contacts in a sealed reed switch as a part of the manufacturing process, the steps comprising,

(a) placing an operating winding about the reed switch,

(b) connecting the operating winding to a 100 cycles per second pulse source to repeatedly close and open said contacts,

(c) connecting the contacts in circuit with switch means and the pulse source to repeatedly complete a circuit through the contacts for permitting a current of five amperes to flow for 250 microseconds before interruption by opening of the reed switch contacts, and

(d) interrupting the circuit through the switch means and reed switch contacts at the end of a one second interval.

References Cited by the Examiner

UNITED STATES PATENTS

2,917,641	12/1959	Montone	317—135 X
3,025,496	3/1962	Schmid et al.	317—137 X

ORIS L. RADER, *Primary Examiner.*

LLOYD McCOLLUM, *Examiner.*

W. SHOOP, T. B. JOIKE, *Assistant Examiners.*