Aug. 5, 1952 G. CANON 2,605,717

PUMP FOR WELLS

Filed May 6, 1948

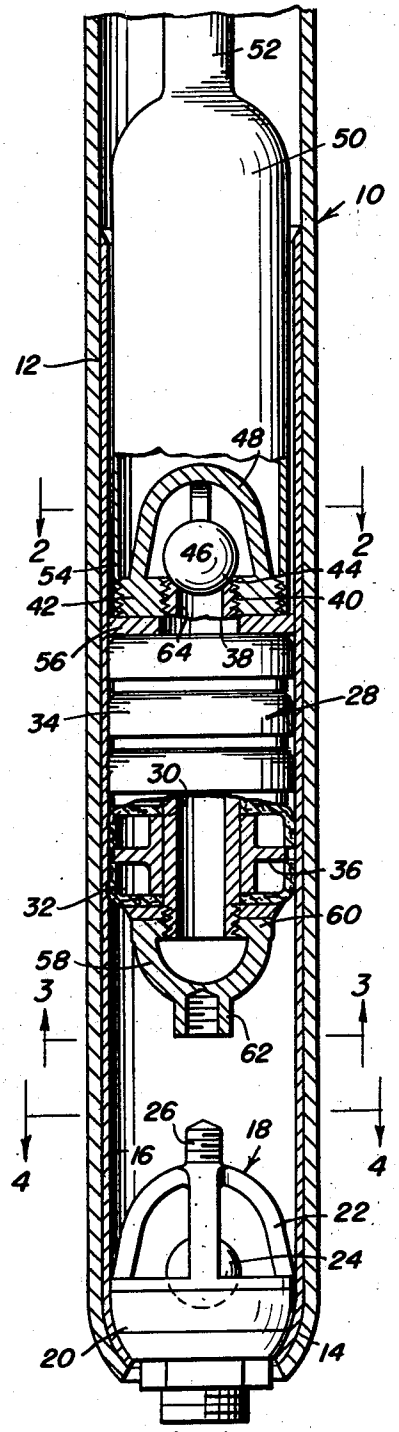


Fig. 1.

Fig. 2.

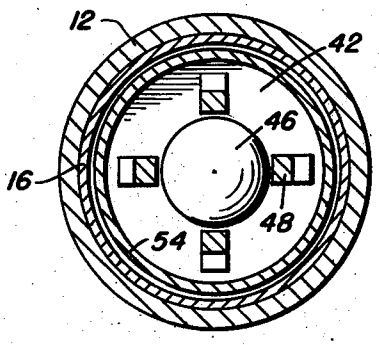


Fig. 3.

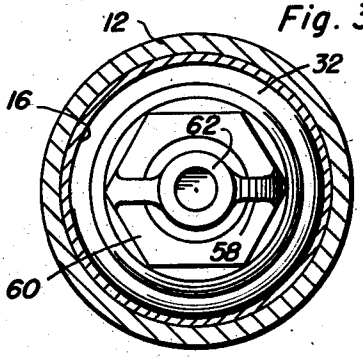


Fig. 4.

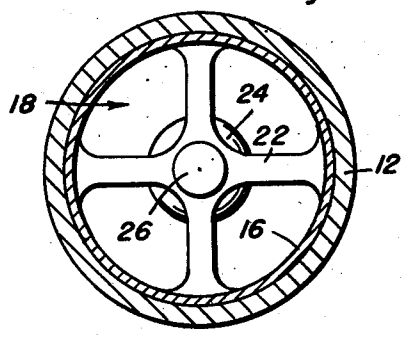


Inventor

Gus Canon

By Clarence A. O'Brien and Harvey B. Jacobson

Attorneys

Patented Aug. 5, 1952 2,605,717

# UNITED STATES PATENT OFFICE

2,605,717

## PUMP FOR WELLS

Gus Canon, Rencona, N. Mex.

Application May 6, 1948, Serial No. 25,420

1 Claim. (Cl. 103—225)

1

The present invention relates to new and useful improvements in pumps and more particularly to a pump for water or other wells of a medium depth.

An important object of the invention is to provide a pump which is placed in the bottom of the well and in which a hollow pump rod works in a casing with a check valve at the lower end of the casing and a valved piston at the lower end of the pump rod and arranged to trap liquids in a cylinder at the lower end of the casing between the check valve and the piston upon an upstroke of the piston and to force the liquid upwardly through the piston and pump rod upon the downstroke thereof.

An important object of the invention is to provide a lower check valve which is normally sealed in the lower end of the cylinder of the casing and providing coupling means between the piston and the check valve for lifting the check valve upwardly out of the casing, when desired.

A still further object is to provide a pump of this character of simple and practical construction, which is efficient and reliable in use, relatively inexpensive to manufacture and otherwise well adapted for the purposes for which the same is intended.

Other objects and advantages reside in the details of construction and operation as more fully hereinafter described and claimed, reference being had to the accompanying drawings forming part hereof, wherein like numerals refer to like parts throughout, and in which:

Figure 1 is a vertical sectional view of the cylinder showing the check valve and piston positioned therein;

Figure 2 is an enlarged transverse horizontal sectional view taken substantially on the plane of section line 2—2 of Figure 1;

Figure 3 is an enlarged transverse horizontal sectional view taken substantially on the plane of section line 3—3 of Figure 1; and

Figure 4 is an enlarged transverse horizontal sectional view taken substantially on the plane of section line 4—4 of Figure 1.

Referring now to the drawings in detail, wherein for the purpose of illustration, there is disclosed a preferred embodiment of the present invention, the numeral 10 represents the present pump generally, including a cylinder 12 having an open tapered lower end 14. The cylinder is provided with a lining 16 preferably of brass or other suitable material.

A check valve designated generally by the numeral 18 is provided with a leather sealing ring

2

or cup 20 having a wedging fit in the lower tapered end 14 of the cylinder 12 to hold the check valve sealed therein. A cage 22 rises from the check valve to trap the ball check or ball valve 24 therein and a threaded stem 26 rises from the cage 22.

A piston designated generally by the numeral 28 comprises a holiow rod 30 having an upwardly extending leather cup 32 at its lower end and a plurality of downwardly extending cups 34 above the cup 32, said cups having a working fit in the lining 16 of the cylinder 12.

A spacer plate 36 of preferably metallic construction is carried by the piston 28 and retains the plunger leathers 32 and 34 in position relative to the piston 28.

The upper end of the piston rod 30 is externally threaded as at 40 and receivably engages an internally threaded opening 38 in an externally threaded valve supporting plate 42. The upper extremity of the rod 30 is concaved to provide a seat 44 for a ball valve or ball check 46, and a cage 48 integrally formed with and rising from the supporting plate 42 encloses the ball valve 46.

The numeral 50 represents a pump rod having a reduced upper portion 52 and an internally threaded lower portion 54 that receivably engages the external threads of the supporting plate 42. It is noted, that by reducing the upper portion of the pump rod 50 the same may be attached to a small diameter plunger rod whereby, when in operation, the amount of pressure on the downstroke would be several times as much greater as the pressure that will be present on the upstroke thus permitting the same quantity of liquid to be pumped with less power.

Interposed between the supporting plate 42 at the upper leather of the piston 28, is a sealing disc or washer 56 of any suitable material.

The U-shaped hanger 58 is integrally formed with a multi-sided nut 60 that is threaded on the lower end of the rod 50 and this hanger 58 is formed at its lower portion with an internally threaded socket 62 for coupling onto the stem 26 of the lower check valve 18.

In operation of the present pump, the cylinder 12 is lowered into a well and an upward movement of piston 28 will draw liquid into the lower end of the cylinder 12 by opening the ball check 24 and closing the ball check 46, the liquid filling the chamber between the lower check valve 18 and the piston 28. A downward movement of piston 28 will close the ball check 24 and force liquid upwardly through the passage 64 and into the pump rod 50 by opening the upper ball check 46.

When it is desired to move the lower check valve 18, the piston 28 is moved downwardly to engage the socket 62 with the threaded stem 26, whereupon the check valve 18 is pulled upwardly from the lower end of the cylinder.

In view of the foregoing description taken in conjunction with the accompanying drawings it is believed that a clear understanding of the device will be quite apparent to those skilled in this art. A more detailed description is accordingly deemed unnecessary.

It is to be understood, however, that even though there is herein shown and described a preferred embodiment of the invention the same is susceptible to certain changes fully comprehended by the spirit of the invention as herein described and the scope of the appended claim.

Having described the invention, what is claimed as new is:

A pump comprising a casing, a pump cylinder at the lower end of said casing, said pump cylinder having an open tapered lower end, a check valve including an annular sealing member having a wedging sealing fit in the tapered lower end of the cylinder, a valved piston working in the cylinder above the check valve, means forming a detachable connection between the check valve and the piston to permit the piston to be employed for pulling the check valve from the cylinder, said piston comprising a hollow rod, a lower leather cup on the lower end of said hollow rod including an upstanding peripheral flange, a plurality of juxtaposed leather cups disposed one above the other and received on said hollow rod and including a lower end cup, each cup of said plurality of cups having a depending peripheral flange, a sleeve received on said hollow rod and enclosed within the upstanding peripheral flange of said lower cup and the depending peripheral flange of said lower end cup, and a spacer ring integrally formed with the outer periphery of the sleeve and disposed between and contacting the upstanding peripheral flange of said lower cup and the depending peripheral flange of said lower end cup to retain the plurality of cups and the lower cup in position relative to each other.



GUS CANON.

## REFERENCES CITED

The following references are of record in the file of this patent:

UNITED STATES PATENTS


| Number | Name | Date |
|---|---|---|
| 42,686 | Reynolds | May 10, 1864 |
| 209,258 | Hanna | Oct. 22, 1878 |
| 631,776 | Cook | Aug. 29, 1899 |
| 654,706 | Braymer | July 31, 1900 |
| 805,922 | Lockwood | Nov. 28, 1905 |
| 928,639 | Dewoody | July 20, 1909 |
| 984,351 | Conrader | Feb. 14, 1911 |
| 1,104,962 | Clark | July 28, 1914 |
| 1,178,216 | Conrader | Apr. 4, 1916 |
| 1,648,400 | Hill | Nov. 8, 1927 |
| 1,736,486 | Carnahan | Nov. 19, 1927 |