G. S. MASLEN.

SEAT SUPPORT.

APPLICATION FILED AUG. 10, 1915.

1,181,026.

Patented Apr. 25, 1916.

2 SHEETS—SHEET 1.

Fig. 1.

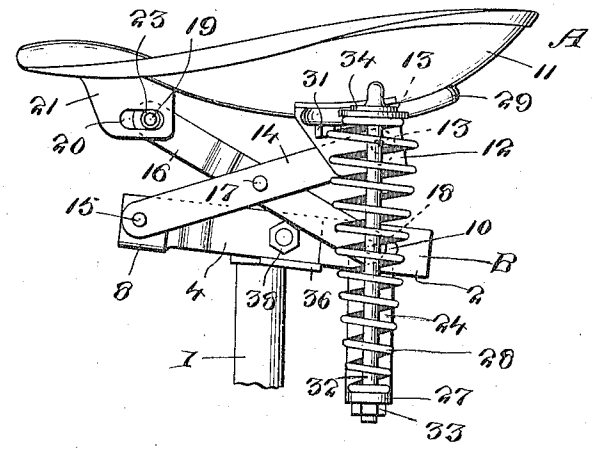

Fig. 2.

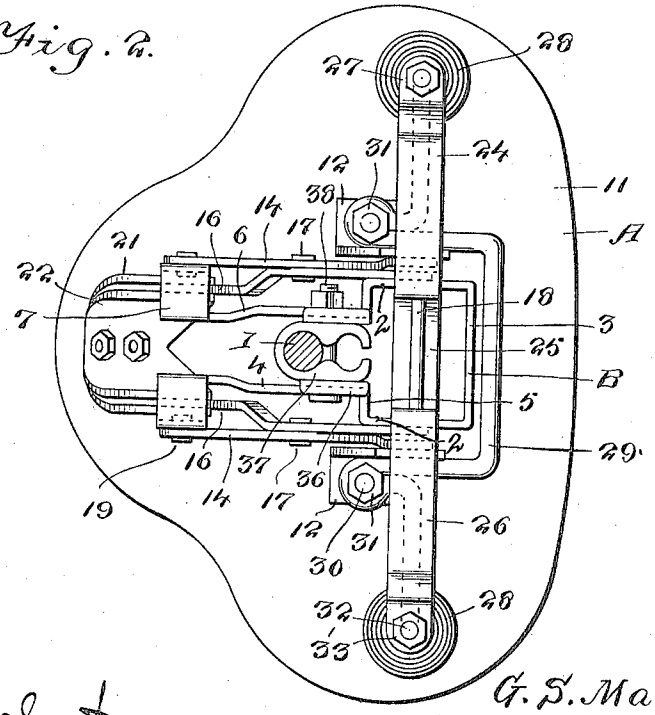

Witnesses

E. R. Ruppert.

Fred W. Price Jr.

Inventor

G. S. Maslen

By Victor J. Evans

Attorney

G. S. MASLEN.

SEAT SUPPORT.

APPLICATION FILED AUG. 10, 1915.

1,181,026.

Patented Apr. 25, 1916.

2 SHEETS—SHEET 2.

Fig. 3.

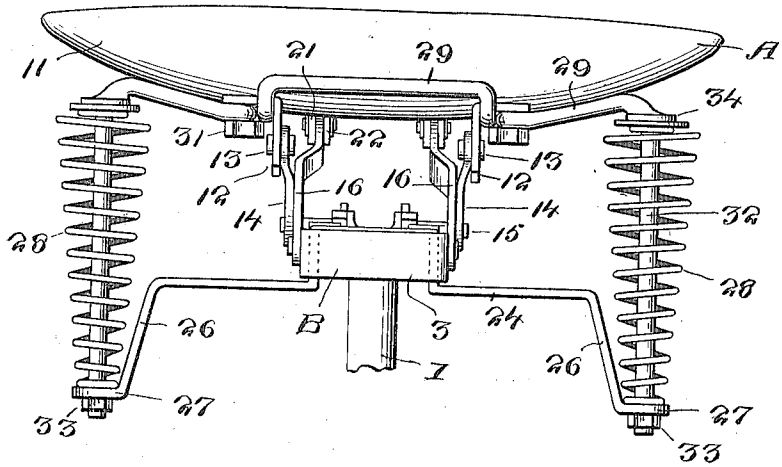

Fig. 4.

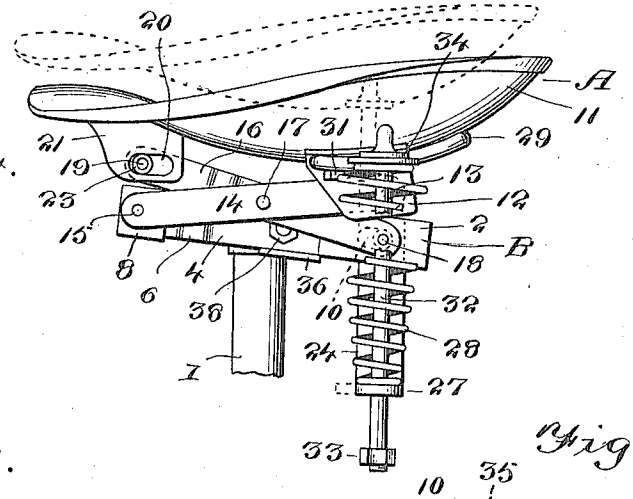

Fig. 5.

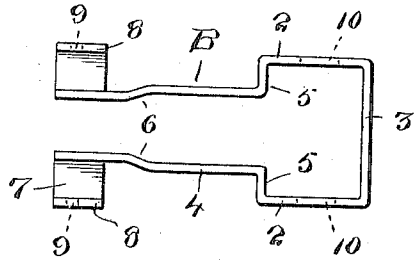

Fig. 6.

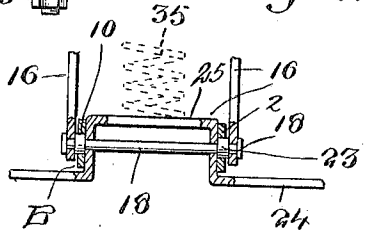

Witnesses

E. R. Ruppert.

Fred W. Price Jr.

Inventor

G. S. Maslen

By Victor J. Evans

Attorney

UNITED STATES PATENT OFFICE.

GEORGE S. MASLEN, OF PHILADELPHIA, PENNSYLVANIA.

SEAT-SUPPORT.

1,181,026. Specification of Letters Patent. Patented Apr. 25, 1916.

Application filed August 10, 1915. Serial No. 44,821.

To all whom it may concern:

Be it known that I, GEORGE S. MASLEN, a citizen of the United States, residing at Philadelphia, in the county of Philadelphia and State of Pennsylvania, have invented new and useful Improvements in Seat-Supports, of which the following is a specification.

This invention relates to seat supports, one of the main objects of the present invention being to produce seat supporting means whereby, in the downward movement of the seat under the yielding action of the supporting springs, the seat will also move in a rearward direction thereby avoiding any tendency to pitch the rider over the head of the machine while traveling over a rough road surface, the mechanism also operating to check or cushion the recoil after the seat has been depressed and thrust backwardly by the load imposed thereon.

A further object of the invention is to produce seat supporting means of the character above specified which is simple and reliable in operation and which is economical in construction and maintenance.

With the above and other objects in view, the invention consists in the novel construction, combination and arrangement of parts, as herein described, illustrated and claimed.

In the accompanying drawings:—Figure 1 is a side elevation of the seat support of this invention showing also the seat and seat post. Fig. 2 is a bottom plan view of the same showing a seat post in cross section. Fig. 3 is a rear elevation of the same. Fig. 4 is a side elevation similar to Fig. 1 illustrating the relation of the parts in full lines when the seat is depressed and indicating the elevated position of the seat by dotted lines. Fig. 5 is a top plan view of the stationary supporting member. Fig. 6 is a fragmentary vertical cross section taken in line with the spring holding cross head, showing the pivot bolt in elevation and the adjacent end portions of two of the parallel motion levers.

Referring to the drawings A designates the seat which is shown in form of a motorcycle saddle, and B generally designates the stationary supporting member which is mounted directly on the seat post 1.

The stationary supporting member B which is illustrated in top plan view in Fig. 5 is preferably made in one piece of metal bent to comprise the substantially parallel rear portions 2, the rear transverse connecting portion 3, the inwardly offset and substantially parallel portions 4 formed by bending the metal at 5, the inwardly converging forward portions 6, the outwardly extending oppositely disposed portions 7 and the upturned extremities 8, the extremities 8 being formed with holes 9 and the portions 2 being formed with longitudinal slots 10 the purpose of which will presently appear.

Fastened to the bottom of the seat A which is of the non-suspension or rigid type and comprises a stiff metal bottom plate 11 are lugs or ears 12 to which are pivotally connected at 13 a pair of parallel motion levers 14 parallel to each other and pivotally connected by pins or bolts 15 to the extremities 8 of the stationary supporting member B, the pins or bolts 15 passing through the holes 9 of the member B.

In addition to the levers 14, there are parallel crossing or intersecting levers 16, the levers 14 and 16 being pivotally connected together at 17 where they intersect or cross. The levers 16 are provided at their lower extremities with pins 18 which are movable lengthwise of the slots 10 of the supporting member B. At their opposite extremities, the levers 16 are provided with pins 19 which are movable lengthwise of slots 20 formed in two sets of parallel guides 21 and 22, the parallel guides 21 and 22 serving to prevent lateral motion of the levers 16 while permitting the upper extremities thereof to slide freely between them, thus overcoming any tendency of the saddle to sway or oscillate laterally. If desired anti-friction rollers 23 may be placed around the pins 18 and 19.

24 designates a cross head or cross bar which has a rocking movement in relation to the stationary supporting member B to which it is connected by the pivot bolt 18

as shown in Fig. 6, said bolt serving also as the pivotal connection between the rear or lower extremities of the levers 16 and the stationary supporting member B.

The central portion of the cross head 24 is formed with the upwardly offset portion 25 which lies between the side portion 2 of the stationary supporting member B and as the bolt 18 moves longitudinally in the slot 10, the cross head 24 is correspondingly moved lengthwise of the member B toward and away from the seat post 1, the seat A and the cross head 24 moving rearwardly as the seat moves downwardly and vice versa. The cross head 24 extends in opposite direction from and perpendicularly to the member B and has its end portions depressed at 26 and then extended outwardly at 27 to form seats for the lower extremities of a pair of coiled expansion cushioning springs 28. A yoke 29 is secured in fixed relation to the bottom of the seat by means of bolts 30 and nuts 31 and the end portions of said yoke are bent and extended downwardly to form guides or guide rods 32 which extend lengthwise through the springs 28 and through openings in the spring seats 27 where they are either headed or provided with nuts 33 threaded thereon below the seats to limit the upward movement of the seat or saddle proper. Shoulders 34 at the upper ends of the guides or guide rods 32 form seats for the upper extremities of the springs 28. Where the rider is over the average weight, an auxiliary expansion spring 35 may be interposed between the upwardly offset portion 25 of the cross head and the bottom of the seat A as indicated by dotted lines in Fig. 6.

Channel iron strips 36 embrace the inner sides of the portions 4 of the stationary supporting member B and between said strips 36 there is arranged a seat post clamping member 37, a clamping bolt 38 passing through the parts 4, 36 and 37 to clamp the stationary member firmly upon the seat post 1 as best shown in Fig. 2.

From the foregoing description, taken in connection with the accompanying drawings, it will now be understood that as the seat is depressed by the weight or load imposed thereon, the saddle at the same time moves rearwardly for the reason that the pivot point 15 is fixed and likewise the pivot point 13. Therefore, the pivot point 13 swings in an arc of which the point 15 is the center. Simultaneously, the points 18 and 19 slide in the direction of length of the slots 10 and 20 and as the parallel motion levers 14 and 15 are pivotally connected at 17 where they cross or intersect, a parallelogrammatic movement between the seat and stationary supporting member is always obtained, all parts of the seat rising and falling uniformly. The rearwardly yielding and recoil action of the seat, resulting from the construction above set forth, imparts easy and comfortable riding qualities to the machine on which the seat is employed and avoids all tendency to pitch the rider forwardly toward or over the front of the machine. Furthermore, the construction is simple, strong and reliable and may be economically produced and maintained.

Where the rider is under the average weight, the spring 35 may be of the contractile type to assist in the downward movement of the seat.

Having thus described my invention, I claim:—

1. The combination with a supporting base, of a saddle, a lever pivoted at its forward extremity to the base and pivoted at its rear extremity to the saddle, a spring supported by the base and upon which the saddle rests, and a second lever having a sliding connection at its forward extremity with the saddle and a sliding connection at its rear extremity with the supporting base, said levers being crossed and pivotally connected where they cross, the whole adapted to give the seat a bodily up and down motion and also a fore and aft movement.

2. The combination with a supporting base, of a saddle, a lever pivoted at its forward extremity to the base and pivoted at its rear extremity to the saddle, a spring upon which the saddle rests, a second lever having a sliding connection at its forward extremity with the saddle and a sliding connection at its rear extremity with the supporting base, said levers being crossed and pivotally connected where they cross, the whole adapted to give the seat a bodily up and down motion and also a fore and aft movement, and a spring supporting cross head having a rocking connection with said supporting base and extending perpendicularly thereto and below the same.

3. The combination with a supporting base, of a saddle, a lever pivoted at its forward extremity to the base and pivoted at its rear extremity to the saddle, a spring upon which the saddle rests, a second lever having a sliding connection at its forward extremity with the saddle and a sliding connection at its rear extremity with the supporting base, said levers being crossed and pivotally connected where they cross, the whole adapted to give the seat a bodily up and down motion and also a fore and aft movement, a spring supporting cross head having a rocking connection with said supporting base and extending perpendicularly thereto and below the same, and spring guiding means carried by the saddle and passing through said cross head.

4. The combination with a seat of the rigid base type, of supporting means therefor embodying a stationary supporting member elongated in a fore and aft direction, cushioning spring means upholding the seat in relation to one end of said supporting member, and levers crossing each other and pivotally connected where they cross, said levers being terminally jointed to the seat and stationary supporting member, said stationary supporting member having inwardly offset portions between its front and rear ends, and a seat post clamp held between said offset portions.

GEORGE S. MASLEN.

Copies of this patent may be obtained for five cents each, by addressing the "Commissioner of Patents, Washington, D. C."