June 13, 1967 R. C. JORDT 3,324,996

DISPENSER FOR PHARMACEUTICAL TABLETS

Filed Jan. 19, 1966 2 Sheets-Sheet 1

Fig. 1

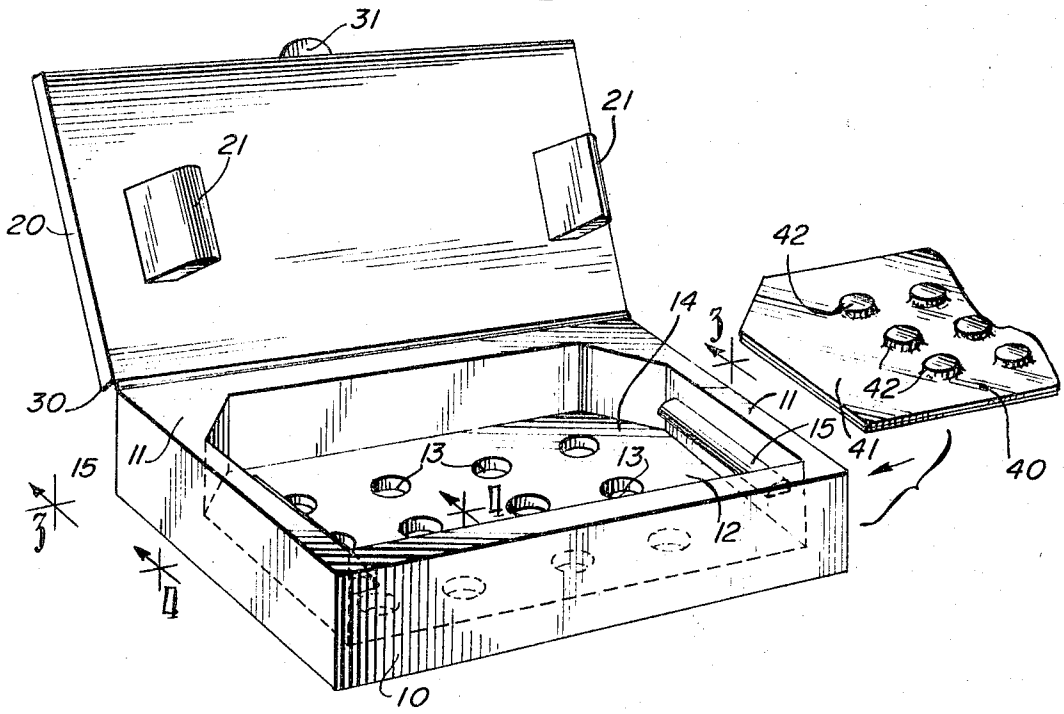

Fig. 2

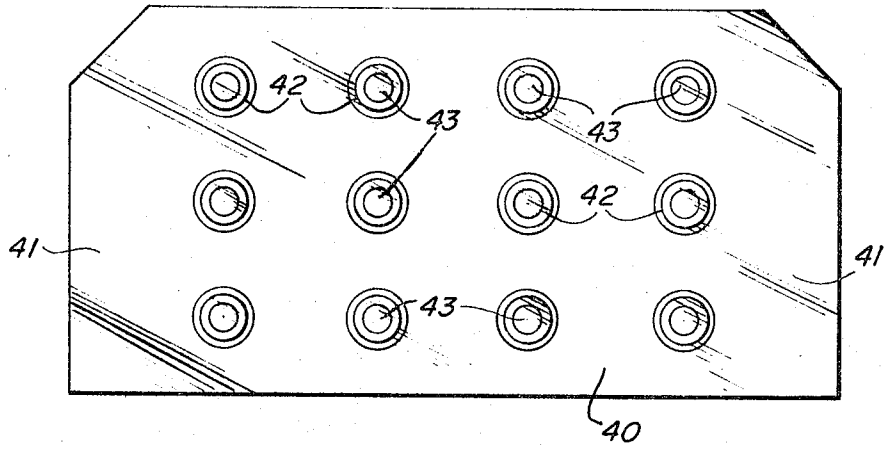

INVENTOR
Robert Carl Jordt
BY Walter C. Rumm
ATTORNEY

June 13, 1967 R. C. JORDT 3,324,996

DISPENSER FOR PHARMACEUTICAL TABLETS

Filed Jan. 19, 1966 2 Sheets-Sheet 2

Fig. 3

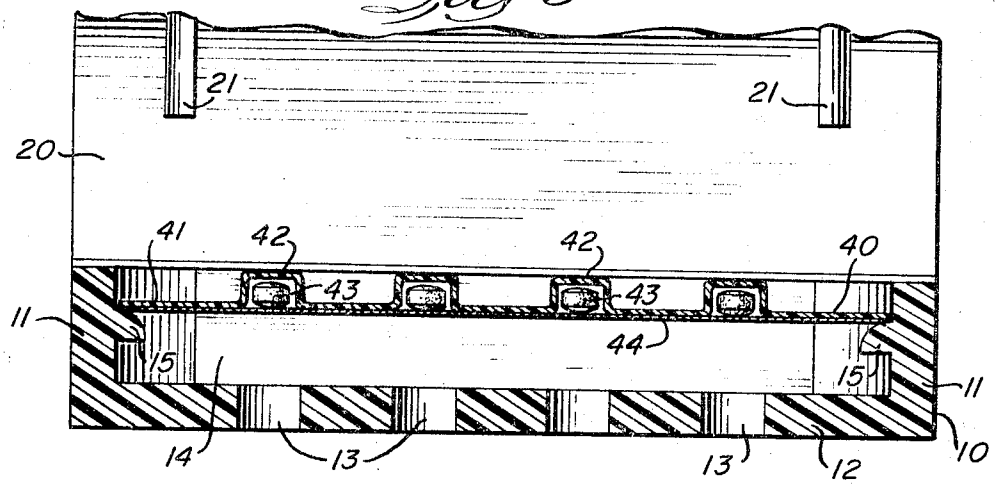

Fig. 4

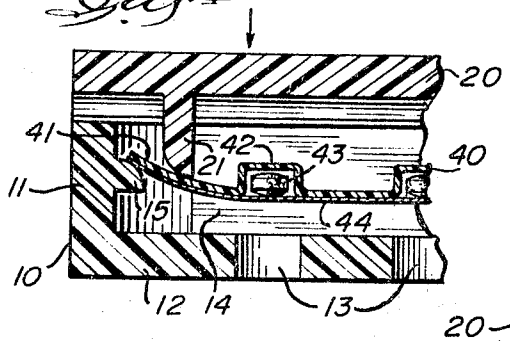

Fig. 5

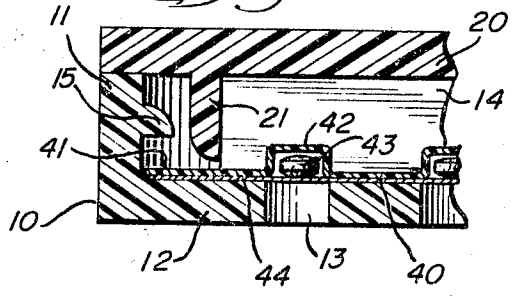

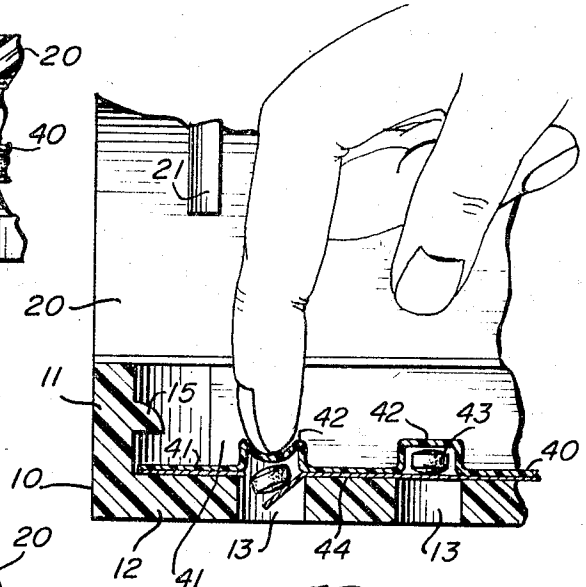

Fig. 6

INVENTOR
Robert Carl Jordt
BY Walter C. Ramm
ATTORNEY

United States Patent Office 3,324,996 Patented June 13, 1967

3,324,996

DISPENSER FOR PHARMACEUTICAL TABLETS

Robert C. Jordt, Deerfield, Ill., assignor to G. D. Searle & Co., Chicago, Ill., a corporation of Delaware

Filed Jan. 19, 1966, Ser. No. 521,667
6 Claims. (Cl. 206—42)

My present invention relates to a dispenser, for pharmaceutical tablets and similar articles, providing for the reliable and convenient emplacement of a tablet supply element therein.

Recent developments in the packaging art have enabled and, indeed, popularized the presentation of a number of pharmaceutical tablets in a tablet supply element comprising (1) a plurality of erect, deformable blisters in spaced relationship to each other (which blisters, typically, are formed in a single sheet); (2) a pharmaceutical tablet within each blister; and (3) a backing sheet of thin, frangible material forming a closure for the blisters. A tablet supply element of such type may be carried upon or proximate a flat and relatively rigid member wherein are a number of apertures, in spaced relationship to each other and corresponding with the spacing of the blisters, and positioned so that each blister is in registration with an aperture. From such a tablet supply element so carried and positioned, single tablets may be pushed- or punched-out, by pressing downward upon and deforming a blister and with slight and brief continuation of the deforming force, breaking the frangible sheet and expressing the tablet through the aperture, in accordance with need or a dosage schedule. The remaining, yet-unused tablets are preserved with ready availability and in a protected condition.

An important requisite for the utilization of such a tablet supply element is the accurate positioning of the blisters in rather precise registration with corresponding apertures of the flat, apertured member. If such positioning is not accomplished or not maintained, a tablet may be punched out against the side of an aperture and, in the process, be broken or caused to crumble. To provide for or contribute to such positioning, the peripheral contour of the tablet supply element may be made to correspond, wholly or in substantial part, with the peripheral contour of a recess wherein the tablet supply element is emplaced. This peripheral conformance serves to restrain the tablet supply element from undesired sliding or slipping movement in a plane parallel to the face of the flat, apertured member. However, if, prior to or during emplacement, the tablet supply element is unduly manipulated, it may become torn or creased or otherwise misshapen thus losing close conformance with the periphery of the recess and the capability to be or remain properly emplaced.

Therefore, an object of my invention is to provide means whereby a tablet supply element, as described, may be emplaced easily, accurately and with the minimum of manipulation.

Another object of my invention is to afford a reusable dispensing package for pharmaceutical tablets and similar preparations. Although, as hereinafter appears, certain elements of my dispenser are intentionally destructed in the course of the utilization thereof, the dispensing package is readily adaptable to repeated use, thus promoting the economies of its utilization.

The invention is explained in the following description and illustrated in the accompanying drawings:

FIG. 1 is a perspective view including the base and the cover of the dispensing container and a portion of the tablet supply element;

FIG. 2 is a plan view of the tablet supply element;

FIG. 3 is a sectional elevation along line 3—3 of FIG. 1 showing the tablet supply element resting on the lugs of the base, prior to emplacement;

FIG. 4 is a sectional elevation along line 4—4 of FIG. 1, showing the cover being closed upon the base, with the tablet supply element being urged toward an emplaced position and an end portion thereof being flexed around a lug in the base;

FIG. 5 is the same sectional elevation as FIG. 4, after the cover of the dispensing container has been closed and with the tablet supply element emplaced;

FIG. 6 is the same sectional elevation as FIG. 4, after the tablet supply element has been emplaced, illustrating the manner in which a tablet is expressed from the dispenser.

In the drawings numeral **10** is a base; numeral **11** is a side portion of base **10**; numeral **12** is the bottom portion of base **10**; numeral **13** represents each of a number of spaced apertures in bottom portion **12**; numeral **14** is a central recess defined by side portions **11** and bottom portion **12**; **15** is a lug extending inwardly into the central recess **14** from side portion **11**; numeral **20** is a cover for base **10**; numeral **21** is a cam depending from the interior surface of cover **20**; numeral **30** is a hinge connecting base **10** and cover **20**; numeral **31** is a catch between base **10** and cover **20**; numeral **40** is a tablet supply sheet; numeral **41** is a marginal portion of tablet supply sheet **40**; numeral **42** is each of a number of spaced, deformable blisters in sheet **40**; numeral **43** is a pharmaceutical tablet; and, numeral **44** is a thin, frangible backing sheet on tablet supply sheet **40**.

Tablet supply sheet **40** has a peripheral contour, that being similar to and only very slightly smaller than, corresponds closely with the periphery of recess **14**. Tablet supply sheet **40** is fabricated of a so-called "rapid recovery" material; it should retain its conformation when subject to relatively slight or moderate forces but flex when subject to the particular bending forces exerted by a cam **21**, as hereinafter described, and then return quickly to its original conformation. The relative spacing of deformable blisters **42** of tablet supply sheet **40** corresponds with the spacing of apertures **13** in bottom portion **12**.

Each cam **21**, depending from the interior surface of cover **20**, is arranged so that the working face thereof passes in close proximity to the inner edge of a lug **15** when and as cover **20** is closed upon base **10**. The minimum clearance between the working face of a cam **21** and the inner edge of a lug **15** should be slightly more than the thickness of tablet supply sheet **40**. Cams **21** should not depend so far as to interfere with the complete closing of cover **20** upon base **10**.

Each lug **15** is between the upper and lower extremities of the side portion **11** from which such lug extends inwardly; thus, each lug **15** overhangs bottom portion **12**.

The invention may be begun to be utilized by resting tablet supply sheet **40**, within the periphery of central recess **14**, upon lugs **15**, as shown in FIG. 3. Then, cover **20** is closed upon base **10**. In the course of such closing operation, as illustrated in FIGS. 4 and 5, each cam **21** bears upon a marginal portion **41** of tablet supply sheet **40** and flexes such marginal portion **41** around each lug **15** while concurrently urging the whole tablet supply sheet **40** toward bottom portion **12**. The distance by which a lug **15** is separated from bottom portion **12** should be approximately the same as the distance between side portion **11** and the inner edge of the lug **15** that extends inwardly from such side portion.

By the closing operation, tablet supply sheet **40** is emplaced upon bottom portion **12**. Tablet supply sheet **40** is retained proximate bottom portion **12** by the overhang parts of lugs **15**. The peripheral conformance between central recess **14** and tablet supply sheet **40** effectively

restrains relative movement thereof in a plane parallel to bottom portion **12**. Thus, each blister **42** and the therewithin pharmaceutical tablet **43** is maintained in registration with an aperture **13**. From tablet supply sheet **40** as emplaced, as shown in FIG. 6, single tablets **43** may be pushed- or punched-out.

The preferred embodiment of my invention possess certain particular characteristics. The working face of each cam **21** is curved, as shown, to facilitate flexure of marginal portion **41** of tablet supply sheet **40**; a portion of each lug **15**, as shown, is likewise curved. Side portions **11** of base **10** are essentially perpendicular to bottom portion **12**; thus, except for the disposition of each lug **15** therein, central recess **14** is a volume of constant transverse cross section from bottom portion **12** to an intersecting and parallel plane some finite distance above each lug **15**. Each lug **15** is an equal distance from bottom portion **12**.

Tablet supply sheet **40** may advantageously be fabricated of polyvinyl chloride of approximately 5 mils thickness; but other materials having similar rigidity, flexure and rapid recovery properties are equally acceptable. Backing sheet **44** may be metal foil of .0005 gauge. Base **10** and cover **20** may be molded of plastic materials or formed of other materials affording sufficient rigidity and substance; base **10** and cover **20** may be integrally molded in a single piece with hinge **30** between them being a so-called "living hinge." Catch **31** is any conventional means for holding cover **20** in closed position upon base **10** and for releasing such cover from such base, when desired.

For situations where tablets **43** are to be administered in accordance with a dosage schedule, such schedule may be imprinted on tablet supply sheet **40**. Blisters **42** and apertures **13** may be arrayed to assist in the visualization of a dosage schedule as, for example, in a rectilinear pattern simulating a calendar. The corresponding peripheral contours of tablet supply sheet **40** and recess **14** may be arbitrarily formed to permit only a single (and correct) mode of emplacement of tablet supply sheet **40** in base **10**. Removal of an expended tablet supply sheet **40** may be accomplished in any convenient manner and, such sheet having been expended, no special care need attend such removal.

A number of different specific embodiments of my invention may be employed without departing from the spirit and scope thereof.

What is claimed is:

1. A dispenser for pharmaceutical tablets comprising, in combination

(a) a planar tablet supply element bearing a number of pharmaceutical tablets and having a relatively flexible marginal portion;

(b) a carrier for the tablet supply element providing a bottom portion and side portions that define a recess;

(c) a lug extending inwardly, into the recess, from a side portion of the carrier; and,

(d) a cam, associated with the carrier, arranged to pass close to the lug so that, after the marginal portion of the tablet supply element has been prepositioned upon one side of the lug, movement of the cam flexes such marginal portion around and to the other side of such lug, and urges the tablet supply element to an emplaced position within the recess and proximate the bottom portion of the carrier.

2. A dispenser for pharmaceutical tablets comprising in combination

(a) a planar tablet supply element bearing a number of tablets and having a relatively flexible marginal portion and a particular peripheral contour;

(b) a base having a planar inner bottom portion and side portions defining a recess, which recess has a peripheral contour conforming with the particular peripheral contour of the tablet supply element to the extent that when such tablet supply element is proximate the inner bottom portion of the base, relative movement between them in a plane parallel to the bottom portion is essentially restrained;

(c) a lug extending inwardly, into the recess, from a side portion of the base intermediate the extremes of such side portions;

(d) a cam, connected with the base, adapted to pass close to the lug so that, after the tablet supply element is prepositioned in the recess with the flexible marginal portion thereof resting upon one side of a lug, movement of the cam flexes such marginal portion around and to the other side of such lug, and urges the tablet supply element to a position within the recess proximate the inner bottom portion of the base.

3. A dispensing package for a planar tablet supply element, which element bears a number of pharmaceutical tablets, possesses form-retaining and form-recovery characteristics and has flexible marginal portions, comprising, in combination

(a) a base which has a bottom portion and side portions defining a recess;

(b) a cover adapted to form a closure for and to be removable from the base;

(c) a plurality of lugs, each such lug extending inwardly from a side portion of the base into the central recess and overhanging the bottom portion of the base; and,

(d) a plurality of cams, each such cam depending from the cover and arranged to pass close to a lug so that after such tablet supply element has been prepositioned upon one side of the lugs and when the cover is closed upon the base, movement of each cam flexes a marginal portion of the tablet supply element around and to the other side of each such lug, and urges the tablet supply element to an emplaced position within the recess and proximate the bottom portion of the base.

4. A dispensing container for a planar tablet supply element, which supply element bears a number of pharmaceutical tablets, possesses form-retaining and form-recovery properties, has flexible marginal portions and is characterized by a particular peripheral contour, comprising, in combination

(a) a base which has a bottom portion and side portions defining a central recess, which recess has a peripheral contour conforming with the particular peripheral contour of the supply element to the extent that when such supply element is in the recess, relative movement between the supply element and the base in a plane parallel to the bottom portion of the base is essentially restrained;

(b) a cover hinged to the base and adapted to be moved between an open position and a closed position;

(c) a plurality of lugs, each such lug extending inwardly from a side portion of the base, intermediate the extremes of such side portion, into the central recess and overhanging the bottom portion of the base; and,

(d) a plurality of cams, each such cam attached to the cover and arranged, after the supply element is prepositioned in the recess with the flexible marginal portions thereof resting upon the lugs and when the cover is moved between the open position and the closed position, to pass near a lug, to flex a marginal portion of the supply element around such lug, and to urge the tablet supply element to position within the recess proximate the bottom portion of the base.

5. A dispenser for pharmaceutical tablets comprising in combination

(a) a planar tablet supply element bearing a number of pharmaceutical tablets, each such tablet being in one of a pattern of erect deformable blisters and adapted to be expressed from such blister by being

pushed out through a frangible portion thereof, which tablet supply element has a relatively flexible marginal portion;

(b) a carrier for the tablet supply element comprising side portions and a bottom portion which has a plurality of apertures in a pattern corresponding to the pattern of blisters on the tablet supply element, such bottom portion and side portions defining a recess;

(c) a lug extending inwardly, into the recess, from a side portion of the carrier, intermediate the extremes of such side portion; and,

(d) a cam, connected with the carrier, arranged to pass close to the lug so that, after the marginal portion of the tablet supply element has been prepositioned upon one side of the lug, movement of the cam flexes such marginal portion around and to the other side of such lug, and urges the tablet supply element to a position within the recess and proximate the bottom portion of the carrier with the blisters of such tablet supply element respectively in registration with the apertures in the bottom portion of the carrier.

6. A dispenser for pharmaceutical tablets comprising in combination

(a) a planar tablet supply element bearing a number of pharmaceutical tablets, each such tablet being in one of a pattern of erect deformable blisters and adapted to be expressed from such blister by being pushed out through a frangible portion thereof, which tablet supply element also possesses form-retaining and form-recovery properties, has flexible marginal portions and is characterized by a particular peripheral contour;

(b) a base which has a bottom portion and side portions defining a recess, the recess being characterized by a peripheral contour conforming with the particular peripheral contour of the tablet supply element to the extent that when such tablet supply element is within the recess, relative movement between the tablet supply element and the base in a plane parallel to the bottom portion of the base is essentially restrained, and which bottom portion has a plurality of apertures in a pattern corresponding to the pattern of blisters on the tablet supply element;

(c) a cover hinged to the base and adapted to move between an open position and a closed position;

(d) a plurality of lugs, each such lug extending inwardly from a side portion of the base into the recess intermediate the extremes of each such side portion; and

(e) a plurality of cams on the cover, each such cam arranged tangentially to approach and pass a lug when the cover is moved from an open position to a closed position so that, after the tablet supply element has been prepositioned upon the lugs within the recess and when the cover is closed, movement of each cam flexes a marginal portion of the tablet supply element around and to the other side of a lug, and urges the tablet supply element to an emplaced position within the recess and proximate the bottom portion of the base with the blisters of the tablet supply element respectively in registration with the apertures in the bottom portion of the base.

References Cited

UNITED STATES PATENTS

2,644,259	7/1953	Beadle	40—7
2,645,334	7/1953	Aldridge	206—16.5
3,199,489	8/1965	Ruoss et al.	206—42
3,206,012	9/1965	Braginetz	220—31

THERON E. CONDON, *Primary Examiner.*

WILLIAM T. DIXSON, JR., *Examiner.*