638819

FORM 1 SPRUSON & FERGUSON

COMMONWEALTH OF AUSTRALIA

PATENTS ACT 1952

APPLICATION FOR A STANDARD PATENT

Kimberly-Clark Corporation, of 401 North Lake Street, Neenah, Wisconsin, 54956, UNITED STATES OF AMERICA, hereby apply for the grant of a standard patent for an invention entitled:

Apparatus For And Method Of Applying An Elastic Material To A Flexible Backing

which is described in the accompanying complete specification.

Details of basic application(s):-

Basic Applic. No:	Country:	Application Date:
505,954	US	6 April 1990

The address for service is:-

Spruson & Ferguson
Patent Attorneys
Level 33 St Martins Tower
31 Market Street
Sydney New South Wales Australia

DATED this FIFTH day of APRIL 1991

Kimberly-Clark Corporation

By: J. Gibson

REPRINT OF RECEIPT
S020974 05/04/91

Registered Patent Attorney

TO: THE COMMISSIONER OF PATENTS
OUR REF: 159760
S&F CODE: 56610

5845/2

SPRUSON & FERGUSON

COMMONWEALTH OF AUSTRALIA
THE PATENTS ACT 1952
DECLARATION IN SUPPORT OF A CONVENTION APPLICATION FOR A PATENT

AUSTRALIA CONVENTION STANDARD & PETTY PATENT DECLARATION

In support of the Convention Application made for a patent for an invention entitled:

Title of Invention

APPARATUS FOR AND METHOD OF APPLYING AN ELASTIC MATERIAL TO A FLEXIBLE BACKING

Full name(s) and address(es) of Declarant(s)

I/~~We~~ Martin Herman Michael
KIMBERLY-CLARK CORPORATION,
of having a place of business at
Neenah, Wisconsin, U.S.A.

do solemnly and sincerely declare as follows:-

Full name(s) of Applicant(s)

~~1. I am/We are the applicant(s) for the patent~~

(or, in the case of an application by a body corporate)

1. I am/~~We are~~ authorised by
KIMBERLY-CLARK CORPORATION
the applicant(~~s~~) for the patent to make this declaration on its/~~their~~ behalf.
2. The basic application(~~s~~) as defined by Section 141 of the Act was/~~were~~ made

Basic Country(ies)

in the United States of America

Priority Date(s)

on April 6, 1990

Basic Applicant(s)

by John William Hoffman
Karl Robert Dehn

~~3. I am/We are the actual inventor(s) of the invention referred to in the basic application(s).~~

Full name(s) and address(es) of inventor(s)

(or where a person other than the inventor is the applicant)

3. John William Hoffman, residing at 3111 West Sunset Court, Appleton, Wisconsin, Karl Robert Dehn, residing at 1409 Covenant Lane, Appleton, Wisconsin, both of U.S.A

of

(respectively)

~~is~~/are the actual inventor(s) of the invention and the facts upon which the applicant(~~s~~) is/~~are~~ entitled to make the application are as follows: The said applicant is the assignee of the actual inventors.

Set out how Applicant(s) derive title from actual inventor(s) e.g. The Applicant(s) is/are the assignee(s) of the invention from the inventor(s)

4. The basic application(~~s~~) referred to in paragraph 2 of this Declaration was/~~were~~ the first application(~~s~~) made in a Convention country in respect of the invention(~~s~~) the subject of the application.

Declared at Neenah, Wisconsin, U.S.A. this 19th day of March 19 91

KIMBERLY-CLARK CORPORATION

By: Martin Herman Michael
Signature of Declarant(s)
Martin Herman Michael
Vice President and Chief Counsel

SFP4

To: The Commissioner of Patents

1/81

AU9174192

(12) PATENT ABRIDGMENT (11) Document No. AU-B-74192/91
(19) AUSTRALIAN PATENT OFFICE (10) Acceptance No. 638819

(54) Title
APPARATUS FOR AND METHOD OF APPLYING AN ELASTIC MATERIAL TO A FLEXIBLE BACKING

International Patent Classification(s)
(51)[5] B26B 021/16 B32B 003/16 B32B 031/10

(21) Application No. : 74192/91 (22) Application Date : 05.04.91

(30) Priority Data

(31) Number	(32) Date	(33) Country
505954	06.04.90	US UNITED STATES OF AMERICA

(43) Publication Date : 10.10.91

(44) Publication Date of Accepted Application : 08.07.93

(71) Applicant(s)
KIMBERLY-CLARK CORPORATION

(72) Inventor(s)
JOHN WILLIAM HOFFMAN; KARL ROBERT DEHN

(74) Attorney or Agent
SPRUSON & FERGUSON , GPO Box 3898, SYDNEY NSW 2001

(56) Prior Art Documents
US - A 4488923
US - A 4397704
DE - C 3347294

(57) Claim

1. A method for applying an elastic material to a flexible backing, comprising:

feeding the flexible backing material onto a drum that has surface grooves parallel to the axis of the drum such that at least a portion of said flexible backing overlays the drum and the internal surface of at least one of the grooves, wherein said grooves are spaced between about 5 and 25 cm apart on said drum, and each of said grooves has a substantially smooth internal surface with a surface length between about 3 and 24 cm, and wherein each of said grooves is between approximately 2.5 and 7.5 cm wide, and the ratio between the surface length and groove width is between about 1.3:1 and 3:1;

placing at least one elastic strip across said width of said one groove;

anchoring said elastic strip at its ends to the flexible backing on the edge of said one groove whereby said strip spans said one groove;

drawing said flexible backing off said drum; extending said flexible back, so that the elastic is stretched to overlay the backing; and

adhering the portion of the elastic intermediate said anchored ends to said backing while said intermediate portion is extended.

.../2

21. An apparatus for applying an elastic material to a flexible backing, comprising:

means for feeding the flexible backing material onto a first drum such that at least a portion of said flexible backing overlays the first drum;

a second drum having surface grooves parallel to the axis of said first drum wherein said grooves are spaced between about 5 and 25 cm apart, and each of said grooves has a substantially smooth internal surface with a surface length between about 3 and 24 cm, and wherein each of said grooves is between approximately 2.5 and 7.5 cm wide, and the ratio between the surface length and groove width is between about 1.3:1 and 3:1;

means for placing at least one elastic strip across said width of said one groove;

means for anchoring said elastic strip at its ends to the flexible backing on the edge of said one groove whereby said strip spans said one groove;

means for drawing said flexible backing off said first drum;

means for extending said flexible backing so that the elastic is stretched to overlay the backing; and

means for adhering the portion of the elastic intermediate said anchored ends to said backing while said intermediate portion is extended.

638819

S & F Ref: 159760

FORM 10

COMMONWEALTH OF AUSTRALIA

PATENTS ACT 1952

COMPLETE SPECIFICATION

(ORIGINAL)

FOR OFFICE USE:

Class Int Class

Complete Specification Lodged:
Accepted:
Published:

Priority:

Related Art:

Name and Address of Applicant: Kimberly-Clark Corporation
401 North Lake Street
Neenah Wisconsin 54956
UNITED STATES OF AMERICA

Address for Service: Spruson & Ferguson, Patent Attorneys
Level 33 St Martins Tower, 31 Market Street
Sydney, New South Wales, 2000, Australia

Complete Specification for the invention entitled:

Apparatus For And Method Of Applying An Elastic Material To A Flexible Backing

The following statement is a full description of this invention, including the best method of performing it known to me/us

5845/3

ABSTRACT OF THE DISCLOSURE

An apparatus and method are disclosed for securing elastic to a flexible backing for use in catamenial pads. The apparatus includes means for feeding the backing sheet onto a first drum having a plurality of surface grooves formed therein. The backing sheet is pulled into each of the grooves such as by a vacuum. A strip of elastic is then placed across each of the grooves and anchored at its respective ends. The backing sheet is then drawn off of the drum and extended so that the elastic is stretched to overlay the backing sheet. The apparatus further includes means for adhering portions of the elastic intermediate the anchored ends to the backing sheet while the elastic is in its extended position. The method for applying the elastic material to the backing sheet uses the apparatus discussed above.

PATENT

APPARATUS FOR AND METHOD OF APPLYING AN ELASTIC MATERIAL TO A FLEXIBLE BACKING

FIELD OF THE INVENTION

This invention relates to an apparatus for and method of applying an elastic strip to a flexible backing. It relates in particular to ar apparatus for and method of applying elastic strips to flexible plastic backings, such as polyethylene films, to be used in catamenial devices.

BACKGROUND OF THE INVENTION

In diapers, catamenial devices, and other absorbent devices, it is commonplace to have an absorbent material, for example, a batt made from cellulosic fluff, that is backed with a thin plastic film. The backing is supposed to retain moisture in the device. For comfort and additional moisture retention assurance, such devices have been designed to conform to the body. To make such a device conform to the body, an elastic member is often bonded to the plastic backing so as to create pleats or folds in the backing. The elastic is typically bonded to the flat backing while the elastic is stretched. After the elastic is secured, the elastic is released which causes the elastic to contract and gather the flat backing and the absorbent material into a curved shape that conforms to the body.

An example of a device and method of applying elastic to a flexible backing is illustrated in U.S. patent 4,397,704 issued to Frick on August 9, 1983. This patent teaches that a flexible backing is corrugated by winding the backing onto a drum with corrugations formed in its circumference. While the drum was rotating, unstretched, adhesive-coated elastic strips were applied intermittently onto and perpendicular to the corrugations on the corrugated backing such that the elastic strips adhered only to the peaks, but not the valleys, of the corrugations. After the strips were adhered to the peaks, the flexible backing was unwound from the drum and stretched such that the corrugations were removed and the portions of the strips previously spanning the valleys contacted the backing. The elastic was then adhered along its length to the stretched backing by passing the

backing and elastic through nip rolls. When the assembly was allowed to relax after stretching, the elastic gathered the backing.

A problem with Frick's approach is that each piece of bonded elastic has regions of stretched and unstretched elastic between the ends of the elastic. Therefore, when the elastic strip is stretched to the extent that the flexible backing will permit, the unstretched regions correspond to those areas of the elastic that were originally adhered to the peaks of the corrugations in the unstretched state. The stretched regions correspond to those areas that spanned the valleys of the corrugations. The unstretched regions reduce the effectiveness of the elastic because they do not contribute to the gathering of the backing.

Such a situation can be tolerated in a large absorbent device such as a diaper. The elastic in a diaper is long enough that it can produce the desired curvature with much of the elastic effectively not utilized because it cannot be stretched.

The situation, however, cannot be tolerated in small absorbent devices such as catamenial devices where localized areas of the device have elastic bonded to it. A much larger percentage of stretchable elastic is needed per length of elastic in a small device to produce the body conformity desired.

SUMMARY OF THE INVENTION

There is disclosed herein a method for applying an elastic material to a flexible backing, comprising:

feeding the flexible backing material onto a drum that has surface grooves parallel to the axis of the drum such that at least a portion of said flexible backing overlays the drum and the internal surface of at least one of the grooves, wherein said grooves are spaced between about 5 and 25 cm apart on said drum, and each of said grooves has a substantially smooth internal surface with a surface length between about 3 and 24 cm, and wherein each of said grooves is between approximately 2.5 and 7.5 cm wide, and the ratio between the surface length and groove width is between about 1.3:1 and 3:1;

placing at least one elastic strip across said width of said one groove;

anchoring said elastic strip at its ends to the flexible backing on the edge of said one groove whereby said strip spans said one groove;

drawing said flexible backing off said drum; extending said flexible backing so that the elastic is stretched to overlay the backing; and

PATENT BISE/02901

adhering the portion of the elastic intermediate said anchored ends to said backing while said intermediate portion is extended.

There is further disclosed herein an apparatus for applying an elastic material to a flexible backing, comprising:

means for feeding the flexible backing material onto a first drum such that at least a portion of said flexible backing overlays the first drum;

a second drum having surface grooves parallel to the axis of said first drum wherein said grooves are spaced between about 5 and 25 cm apart, and each of said grooves has a substantially smooth internal surface with a surface length between about 3 and 24 cm, and wherein each of said grooves is between approximately 2.5 and 7.5 cm wide, and the ratio between the surface length and groove width is between about 1.3:1 and 3:1;

means for placing at least one elastic strip across said width of said one groove;

means for anchoring said elastic strip at its ends to the flexible backing on the edge of said one groove whereby said strip spans said one groove;

means for drawing said flexible backing off said first drum;

means for extending said flexible backing so that the elastic is stretched to overlay the backing; and

means for adhering the portion of the elastic intermediate said anchored ends to said backing while said intermediate portion is extended.

There is further disclosed herein a method for applying an elastic material to a flexible backing, comprising:

feeding the flexible backing material onto a drum that has surface grooves parallel to the axis of the drum such that at least a portion of said flexible backing overlays the drum and the internal surface of at least one of the grooves, wherein said backing material is drawn into said grooves by vacuum and said grooves are spaced between about 5 and 25 cm apart on said drum, and each of said grooves has a substantially smooth internal surface with a surface length between about 3 and 24 cm, and wherein each of said grooves is between approximately 2.5 and 7.5 cm wide, and the ratio between the surface length and groove width is between about 1.3:1 and 3:1;

placing at least one elastic strip having a modulus of elasticity from about $80N/m^2$ to about $120N/m^2$ across said width of said one groove;

AUSTRALIA

adhering said elastic strip at its ends with adhesive to the flexible backing on the edge of said one groove whereby said strip spans said one groove wherein said adhesive has a shear force between about 1000 and 4000 gr;

drawing said flexible backing off said drum; extending said flexible backing so that the elastic is stretched to overlay the backing; and

adhering the portion of the elastic intermediate said anchored ends to said backing while said intermediate portion is extended.

There is further disclosed herein an apparatus for applying an elastic material to a flexible backing, comprising:

means for feeding the flexible backing material onto a first drum such that at least a portion of said flexible backing overlays the first drum;

a rotatable second drum having surface grooves parallel to the axis of said first drum wherein said grooves are spaced between about 5 and 25 cm apart, and each of said grooves has a substantially smooth internal surface with a surface length between about 3 and 24 cm, and wherein each of said grooves is between approximately 2.5 and 7.5 cm wide, and the ratio between the surface length and groove width is between about 1.3:1 and 3:1;

means for placing at least one elastic strip across said width of said one groove;

a stationary adhesive gun for anchoring elastic strip at its ends to the flexible backing on the edge of said one groove whereby said strip spans said one groove and whereby adhesive is applied while said first drum is rotated;

means for drawing said flexible backing off said first drum;

means for extending said flexible backing so that the elastic is stretched to overlay the backing;

means for adhering the portion of the elastic intermediate said anchored ends to said backing while said intermediate portion is extended; and

cutter means whereby said elastic strip is fed from a longer strip onto a second roll, cut by said cutter means into said strip, and placed on said first roll by said second roll.

Preferably, at least one elastic strip is placed across the width of the one groove. The elastic strip is anchored at its ends to the

flexible backing on the edge of the groove outside the groove so the strip spans the groove. The flexible backing is drawn off the drum and pulled so that the elastic is stretched to overlay the backing. The portion of the elastic located intermediate the anchored ends is adhered to the backing when the intermediate portion is stretched. When the elastic is allowed to relax, it gathers the flexible backing into localized pleats.

Beneficially, the flexible backing is used in small absorbent devices, and the elastic allows the device to conform to the human body.

BRIEF DESCRIPTION OF THE DRAWINGS

A preferred form of the present invention will now be described by way of example with reference to the accompanying drawings, wherein:

Figure 1 is a side view of an apparatus for applying an elastic material to a flexible backing;

Figures 2-5 are schematic representations of steps in the process of this invention;

Figure 6 is a schematic representation of an apparatus for assembling a catamenial device using the flexible backing produced by the apparatus in Figure 1; and

PATENT OFFICE

Figure 7 is a perspective view of a catamenial device produced in accordance with the apparatus and process of this invention.

DETAILED DESCRIPTION OF THE PREFERRED EMBODIMENT

Referring to Fig. 1, an apparatus 10 for practicing the process of this invention is illustrated. The apparatus 10 includes a feed device 12 for feeding backing and elastic onto a looper drum 14 (second drum). The looper drum 14 and appurtenant devices apply elastic strips to the backing in a manner described below. The backing is then removed in a continuous sheet from the looper drum 14 by a conveyor 16. The backing is then used for backing catamenial devices as shown in Fig. 7. Feed device 12 includes a first dispensing roll 18 for dispensing a flexible backing sheet material 20. The backing sheet 20 is preferably a thin sheet of polyethylene, for example, about 0.5 to 3 millimeters (mm) thick and about 5 to 20 cm. wide. The backing sheet 20 is passed above apparatus 10 on a series of guide rolls 26a, 26b and 26c, and fed between a pair of motor-driven nip rolls 28a and 28b. The nip rolls 28a and 28b draw the backing sheet 20 from the feed roll 18 and over the guide rolls 26a, 26b and 26c, and feed the backing sheet 20 onto the looper drum 14.

The feed device 12 also includes a second dispensing roll 22 for dispensing an elastic strip material 24. The elastic strip 24 is preferably made from stretch bonded laminate (SBL), and comes in a continuous strip that is about 4 centimeters (cm) wide. The elastic material 24 is drawn across a guide roll 30 by a pair of motor-driven nip rolls 32a and 32b. As the elastic strip 24 is drawn across the guide roll 30, it is cut lengthwise by a score slitter 22 which is mounted adjacent to the roll 30 into two approximately 2 cm wide continuous parallel strips. The two strips are then fed by nip rolls 32a and 32b between a vacuum transfer drum 34 (first drum) and an elastic cutter 36 described in more detail below. The elastic cutter 36 cuts the two parallel elastic strips simultaneously, and the vacuum transfer drum 34a transfers the two strips onto the looper drum 14.

The looper drum 14 is a cylindrical drum that is rotated around its longitudinal axis by a motor (not shown). The looper drum 14 has a plurality of grooves 38 that are formed parallel to the longitudinal axis of drum and spaced equidistant from each other around the

circumference of the drum about 5 to 25 cm apart. The looper drum 14 has vacuum suction means that operate to draw suction through the surface of the drum 14 at locations and times described below.

The looper drum 14 is rotated clockwise when viewed from the side shown in Fig. 1. The backing sheet 20 is fed onto the surface of the looper drum 14 by the nip rolls 28a and 28b that are positioned at approximately the 11 o'clock position relative to the drum 14. A vacuum is applied to that portion of the drum 14 starting between the 11 and 12 o'clock positions, and the vacuum is ended at about the six o'clock position. No vacuum is applied to the surface of the drum 14 between the six o'clock position and the vacuum start position.

The operation of the looper drum 14 can be understood by following one groove 38a as it rotates from the 12 o'clock position clockwise. As the backing sheet 20 is fed onto the surface of the looper drum 14, the vacuum draws a portion of the backing sheet 20 into a groove 38a at the 12 o'clock position as shown in Fig. 2.

Preferably the vacuum is drawn at a pressure of between about 1000 and 5000 torr. The nip rolls 28 feed the backing sheet 20 at a rate that allows the necessary backing sheet 20 to be drawn into the groove 38a without noticeable stretching of the backing sheet 20. The feed rate of the nip rolls 28a and 28b is not so fast that the backing sheet material 20 between adjacent grooves 38 cannot lay smooth on the surface of the looper drum 14.

As the groove 38a passes the 12 o'clock position, a pressure-sensitive adhesive is sprayed from a stationary adhesive gun 40 in two spaced parallel strips, for example, in strips where the elastic will be secured as described below, that are between about 0.5 and 18 cm apart, preferably 6 cm apart. The adhesive is preferably a sprayable, pressure-sensitive type, for example, adhesive 70-3166 from National Starch Corporation. The adhesive has a shear force of between 1000 and 4000 grams as measured by an Instron machine. Each strip of adhesive is applied into the groove 38a and on anchor areas 42a and 42b on either side and outside of the groove 38a on the surface of the looper drum 14. The adhesive is not otherwise applied to the backing sheet 20 on the surface of the looper drum 14. The stationary adhesive gun 40 allows more adhesive to be applied per unit area on the anchor areas 42a and 42b than on the backing sheet 20 lining the groove

38a. The reason for this is that the looper drum 14 is rotated at a constant speed under the adhesive gun 40 while the adhesive is sprayed on at a constant rate. Since there is more area in the groove 38a to cover with adhesive per unit time than on the anchor areas 42a and 42b, the backing sheet 20 receives less adhesive. The advantages of this difference in adhesive application will be explained below.

As the groove 38a passes the 2 o'clock position, the vacuum transfer drum 34 simultaneously transfers onto the looper drum 14 two strips of elastic 44. The elastic strips 44 are cut from the continuous elastic strip 24 such that the two strips 44 are parallel to one another and span the groove 38a, as is shown in Fig. 3. Only one of the elastic strips 44 is shown in Fig. 3. Each of the elastic strips 44 is positioned such that its ends overlay the adhesive-coated anchor areas 42a and 42b. Each elastic strip 44 is positioned such that between about 0.3 and 2.5 cm of each end overlays the anchor areas 42a and 42b. As shown in Fig. 1, the vacuum transfer drum 34 is close to the looper drum 14. The gap between the surfaces of the two drums 34 and 14 is about 0.5 to 3.0 times the thickness of the elastic. The elastic strips 44 are applied such that they pass through this gap, which compresses the ends of elastic strips 44 against the anchor areas 42a and 42b. This ratio of gap thickness to elastic thickness has been found to provide an initial attachment of elastic to the backing sheet 20 without compressing the backing sheet 20 and the elastic unduly to cause adhesive to ooze from between them.

The elastic is preferably a stretch bonded laminate type, for example, from Kimberly-Clark Corp., and has a modulus of elasticity between about $80N/m^2$ to about $120N/m^2$. When the elastic is stretched 100%, it has a tension ranging between about 350 and 450 grams per inch width of the elastic.

Nip rolls 46 and 48 are positioned at about the four o'clock and about the six o'clock positions. The nip roll 46 further compresses the elastic strips 44 onto the anchor areas 42a and 42b. The nip roll 48 isolates the nip roll 46 from the tension exerted on the backing sheet 20 by the conveyor 16. After the six o'clock position, the vacuum exerted on the groove 38a is released, and the backing sheet 20 is removed from the looper drum 14 in a manner described below.

The grooves 38 on the looper drum 14 should have a substantially smooth internal surface. The "internal surface" is the area between points A and B along the surface of the groove shown in Fig. 2. By "substantially smooth" is meant that there are no sharp contours that prevent the backing sheet 20 from conforming to the contours of the internal surface of the groove 38. As shown in Fig. 2, for example, the groove 38a has two flat sidewalls 50a and 50b that slope toward one another as they go deeper into the groove 38. The sidewalls 50a and 50b slope at an angle alpha, (see Fig. 3) between about 5 and 20 degrees as measured from a radius R drawn through the middle of the groove 38. The bottom ends of the sidewalls 50a and 50b are joined by a curved portion 52. Therefore, as the backing sheet 20 is drawn into the groove 38a under vacuum, the backing sheet 20 will slide into and conform to the groove 38. If the groove 38 were not substantially smooth, then too little backing sheet material 20 may be drawn into the grooves 38, or different amounts of material will be drawn into the several grooves 38. If too little backing sheet material 20 is drawn into the grooves 38, that affects the degree of gathering of the backing sheet material 20. If different amounts of backing sheet material 20 are drawn into the several grooves 38, that may adversely affects the positioning of the elastic as well.

The grooves 38 also have a surface length from about 3 to 24 cm long, preferably from about 5 to 15 cm long. By "surface length" is meant the length of the surface of the groove 38a between points A and B in Fig. 2. The grooves 38 also have a width W between points A and B of between about 2.5 and 7.5 cm., preferably between about 4 and 7 cm. Most importantly, the ratio between the surface length and groove width is between about 1.3:1 and 3:1, preferably between about 1.75:1 and 2:1.

The elastic strips 44 are produced from the elastic material 24. As indicated above, the elastic material 24 is slit with a stationary knife 22 longitudinally into two parallel strips, each of which is about 2 cm. wide. The two parallel strips are spread about 5 cm apart, and fed between the nip rolls 32a and 32b. The nip rolls 32a and 32b are rotated stepwise at the same speed. Their speed is controlled by an optical sensor that senses the rotational speed and position of the looper drum 14. The speed of the nip rolls 32a and 32b are controlled

such that only about 6 cm lengths of elastic are fed to the vacuum transfer drum 34 and to the cutter 36 for every groove 38 that passes the vacuum transfer drum 34.

The vacuum transfer drum 34 has a pair of cutting mandrels 35 that are spaced 180 degrees apart on the cylindrical surface. The mandrels 35 contact the cutter blades 37 that protrude from the surface of cutter drum 36. The cutter drum 36 is driven synchronously with the vacuum transfer drum 34 so that as the approximately 6 cm lengths of elastic are fed between the vacuum transfer drum 34 and the cutter drum 36 by the nips 32a and 32b, a cutter blade 37 will contact the mandrel 35 to sever the two long strips of elastic 44 (see Figs. 1 and 3). The vacuum transfer drum 34 includes a vacuum device that holds the elastic strips 44 onto the surface of vacuum transfer drum 34 until the drum 34 rotates so that the elastic strips 44 are between the vacuum transfer drum 34 and the looper drum 14. The vacuum is then released from the elastic strips 44, and the elastic strips 44 are compressed against and adhered to the anchor areas on the backing sheet 20 as described previously. The vacuum transfer drum 34 is driven synchronously with the looper drum 14 so that they rotate at the same angular speed. The "same angular speed" means that their surfaces travel at the same velocity.

The tension on the backing sheet 20, as it is removed from the looper drum 14, is from having to operate the conveyor 16 to remove the backing sheet 20 from the looper drum 14 at a speed 5% greater than the speed of the backing sheet 20 being fed onto the looper drum 14. It was found necessary to do this to stretch the elastic strips 44 between the anchor areas 42a and 42b so that the elastic overlays the backing sheet material 20 that was gathered into the groove 38a, (see Fig. 5). The stretching of the elastic begins as the backing sheet 20 is removed from the looper drum 14 (see Fig. 4) and has to be completed before the backing sheet 20 is drawn through a pair of nip rolls 54 and 56 (see Fig. 5) in the conveyor 16. The nip rolls 54 and 56 compress the stretched elastic against the backing sheet 20 such that the adhesive applied between the anchor areas 42a and 42b, for example, the adhesive applied to the backing sheet 20 that was once in the groove 38a, can adhere the elastic to the backing sheet 20 between the anchor areas.

After the backing sheet 20 is passed through the nip rolls 54 and 56 and through the conveyor 16, the adhesive is applied with an adhesive gun 58 (see Fig. 6) across the entire surface of the backing sheet 20 on which the elastic strips 44 are adhered.

Referring to Fig. 6, absorbent pads 60 are spaced along a conveyor (not shown) and fed by the conveyor onto a continuous sheet of cover material 62 which is moving at the same speed as the conveyor. The backing material 20, which is still under tension to keep the elastic strips 44 stretched, is fed at the same speed as the cover material 62 through a pair of nip rolls 64 and 66. The adhesive previously sprayed onto the backing sheet 20 adheres the absorbent pads 60 onto the backing sheet 20 and adheres the cover material 62 to the backing sheet 20 around the perimeters of the absorbent pads 60. It should be noted that the absorbent pads 60 are narrower than the width of the backing sheet 20 and the cover sheet 62.

Referring to Fig. 7, a finished catamenial pad 68 is shown which has been die cut from the web of material passed through the nip rolls 64 and 66. Each finished pad 68 has two parallel elastic strips 44 that gather the otherwise planar product into a curved absorbent pad 68. The elastic strips 44 form part of the perimeter of the catamenial pads 68, and are centered along the middle edges of the pad with the absorbent pad 60 positioned therebetween. As can also be seen, the backing sheet 20 is adhered about its perimeter to the cover sheet 62. Preferably, the cover sheet 62 is made from a spunbonded material that allows moisture to flow easily through, so that it can be absorbed by the absorbent pad 60. The catamenial pad 68 is constructed otherwise as taught in U.S. patent 4,770,657 issued to Ellis et al. on September 13, 1988, and which is incorporated by reference and made a part hereof.

While the invention has been described in conjunction with a specific embodiment, it is to be understood that many alternatives, modifications and variations will be apparent to those skilled in the art in light of the foregoing description. Accordingly, this invention is intended to embrace all such alternatives, modifications and variations which fall within the spirit and the scope of the appended claims.

The claims defining the invention are as follows:

1. A method for applying an elastic material to a flexible backing, comprising:

feeding the flexible backing material onto a drum that has surface grooves parallel to the axis of the drum such that at least a portion of said flexible backing overlays the drum and the internal surface of at least one of the grooves, wherein said grooves are spaced between about 5 and 25 cm apart on said drum, and each of said grooves has a substantially smooth internal surface with a surface length between about 3 and 24 cm, and wherein each of said grooves is between approximately 2.5 and 7.5 cm wide, and the ratio between the surface length and groove width is between about 1.3:1 and 3:1;

placing at least one elastic strip across said width of said one groove;

anchoring said elastic strip at its ends to the flexible backing on the edge of said one groove whereby said strip spans said one groove;

drawing said flexible backing off said drum; extending said flexible backing so that the elastic is stretched to overlay the backing; and

adhering the portion of the elastic intermediate said anchored ends to said backing while said intermediate portion is extended.

2. The method of claim 1 wherein said elastic is anchored at its ends with a pressure sensitive adhesive.

3. The method of claim 2 wherein said elastic is adhered at its ends by spraying said flexible backing with said adhesive, placing said elastic on said backing and applying pressure to said elastic.

4. The method of claim 3 wherein said elastic has a modulus of elasticity from about $80N/m^2$ to about $120N/m^2$.

5. The method of claim 3 wherein said adhesive has a shear force between about 1000 and 4000 grams.

6. The method of claim 3 wherein said intermediate portion of said elastic is adhered to said flexible backing with a pressure sensitive adhesive.

7. The method of claim 6 wherein said adhesive is applied by spraying said adhesive on said flexible backing while rotating said drum.

8. The method of claim 7 wherein said adhesive is applied such that more adhesive is applied per unit area of backing to adhere the ends of said elastic than to adhere said intermediate portion of said elastic.

OFFICE

9. The method of claim 1 wherein each of said grooves has a pair of flat sides that slope upwardly and outwardly from the bottom of the groove and an arcuate portion that joins said flat sides at the bottom of said groove.

10. The method of claim 9 wherein each of said flat sides slopes at an angle between 5 and 20 degrees into said groove.

11. The method of claim 1 wherein said drum includes vacuum means, and said method further comprises drawing a vacuum on said drum whereby said flexible backing is retained on said drum and drawn into said one groove.

12. The method of claim 11 wherein said vacuum is drawn between about 1000 and 5000 torr.

13. The method of claim 1 wherein said elastic strip is fed from a longer strip onto a second roll, cut by cutter means into said strip, and placed on a first roll by said second roll.

14. The method of claim 13 wherein said second roll and first roll are rotated at the same angular speed at a gap between their surfaces from about .25 to about 3 times the thickness of said elastic, and wherein said strip is placed onto said second drum by passing said strip through said gap.

15. The method of claim 14 wherein said strip is anchored at its ends by applying a pressure-sensitive adhesive onto said backing before said strip is placed on said first roll.

16. The method of claim 15 wherein said adhesive is sprayed onto said backing as said first roll is rotated such that adhesive is applied where the ends of said strip are to be anchored and onto the portion of said backing in said groove.

17. The method of claim 16 wherein said adhesive is applied such that more adhesive is applied per unit area where said ends are to be anchored than onto portion in said groove.

18. The method of claim 17 further comprising compressing the ends of said strip against said first drum after said strip is passed through said gap.

19. The method of claim 18 wherein said ends are compressed by passing said strip and backing between a nip roll and said first drum.

20. The method of claim 19 wherein said strip and backing is passed between a second nip roll and said first drum before said backing is drawn off said drum.

21. An apparatus for applying an elastic material to a flexible backing, comprising:

means for feeding the flexible backing material onto a first drum such that at least a portion of said flexible backing overlays the first drum;

a second drum having surface grooves parallel to the axis of said first drum wherein said grooves are spaced between about 5 and 25 cm apart, and each of said grooves has a substantially smooth internal surface with a surface length between about 3 and 24 cm, and wherein each of said grooves is between approximately 2.5 and 7.5 cm wide, and the ratio between the surface length and groove width is between about 1.3:1 and 3:1;

means for placing at least one elastic strip across said width of said one groove;

means for anchoring said elastic strip at its ends to the flexible backing on the edge of said one groove whereby said strip spans said one groove;

means for drawing said flexible backing off said first drum;

means for extending said flexible backing so that the elastic is stretched to overlay the backing; and

means for adhering the portion of the elastic intermediate said anchored ends to said backing while said intermediate portion is extended.

22. The apparatus of claim 21 wherein said means for anchoring and adhering comprises an adhesive spray gun and means for applying pressure to said elastic.

23. The apparatus of claim 22 wherein said adhesive spray gun is stationery whereby adhesive is applied by spraying adhesive on the flexible backing while said first drum is rotated.

24. The apparatus of claim 21 wherein each of said grooves has a pair of flat sides that slope upwardly and outwardly from the bottom of the groove, and an arcuate portion that joins said flat sides at the bottom of said groove.

25. The apparatus of claim 24 wherein each of said flat sides slopes at an angle between 5 and 20 degrees into said groove.

26. The apparatus of claim 21 wherein said first drum includes vacuum means, whereby said flexible backing is retained on said drum and drawn into said one groove by said vacuum means.

27. The apparatus of claim 21 that further includes cutter means

AUSTRALIAN PATENT OFFICE

whereby said elastic strip is fed from a longer strip onto a second roll, cut by said cutter means into said strip, and placed on said first roll by said second roll.

28. The apparatus of claim 27 further including drive means whereby said second roll and first roll are rotated at the same angular speed and wherein there is a gap between their surfaces from about .25 to about 3 times the thickness of said elastic, and wherein said strip is placed onto said second drum by passing said strip through said gap.

29. The apparatus of claim 28 further comprising means for compressing the ends of said strip against said first drum after said strip is passed through said gap.

30. The apparatus of claim 29 wherein said compressing means includes a first nip roll.

31. The apparatus of claim 30 wherein said compressing means further includes a second nip roll.

32. The apparatus of claim 30 wherein said ratio is between 1.75:1 and 2:1.

33. The method of claim 1 wherein said ratio is between 1.75:1 and 2:1.

34. A method for applying an elastic material to a flexible backing, comprising:

feeding the flexible backing material onto a drum that has surface grooves parallel to the axis of the drum such that at least a portion of said flexible backing overlays the drum and the internal surface of at least one of the grooves, wherein said backing material is drawn into said grooves by vacuum and said grooves are spaced between about 5 and 25 cm apart on said drum, and each of said grooves has a substantially smooth internal surface with a surface length between about 3 and 24 cm, and wherein each of said grooves is between approximately 2.5 and 7.5 cm wide, and the ratio between the surface length and groove width is between about 1.3:1 and 3:1;

placing at least one elastic strip having a modulus of elasticity from about $80N/m^2$ to about $120N/m^2$ across said width of said one groove;

adhering said elastic strip at its ends with adhesive to the flexible backing on the edge of said one groove whereby said strip spans said one groove wherein said adhesive has a shear force between about 1000 and 4000 gr;

drawing said flexible backing off said drum; extending said flexible backing so that the elastic is stretched to overlay the backing; and

adhering the portion of the elastic intermediate said anchored ends to said backing while said intermediate portion is extended.

35. The method of claim 34 wherein said adhesive is applied by spraying said adhesive on said flexible backing while rotating said drum.

36. The method of claim 35 wherein said adhesive is applied such that more adhesive is applied per unit area of backing to adhere the ends of said elastic than to adhere said intermediate portion of said elastic.

37. An apparatus for applying an elastic material to a flexible backing, comprising:

means for feeding the flexible backing material onto a first drum such that at least a portion of said flexible backing overlays the first drum;

a rotatable second drum having surface grooves parallel to the axis of said first drum wherein said grooves are spaced between about 5 and 25 cm apart, and each of said grooves has a substantially smooth internal surface with a surface length between about 3 and 24 cm, and wherein each of said grooves is between approximately 2.5 and 7.5 cm wide, and the ratio between the surface length and groove width is between about 1.3:1 and 3:1;

means for placing at least one elastic strip across said width of said one groove;

a stationary adhesive gun for anchoring elastic strip at its ends to the flexible backing on the edge of said one groove whereby said strip spans said one groove and whereby adhesive is applied while said first drum is rotated;

means for drawing said flexible backing off said first drum;

means for extending said flexible backing so that the elastic is stretched to overlay the backing;

means for adhering the portion of the elastic intermediate said anchored ends to said backing while said intermediate portion is extended; and

cutter means whereby said elastic strip is fed from a longer strip onto a second roll, cut by said cutter means into said strip, and placed on said first roll by said second roll.

38. The apparatus of claim 37 further including drive means

whereby said second roll and first roll are rotated at the same angular speed and wherein there is a gap between their surfaces from about .25 to about 3 times the thickness of said elastic, and wherein said strip is placed onto said second drum by passing said strip through said gap.

39. A method of applying an elastic material to a flexible backing, the method being substantially as hereinbefore described with reference to the accompanying drawings.

40. An apparatus for applying an elastic material to a flexible backing, the apparatus being substantially as hereinbefore described with reference to the accompanying drawings.

41. A flexible backing having applied thereto in accordance with the method of claim 39 and/or by using the apparatus of claim 40, an elastic material.

DATED this SEVENTEENTH day of DECEMBER 1992

Kimberly-Clark Corporation

Patent Attorneys for the Applicant
SPRUSON & FERGUSON

FIG. 1

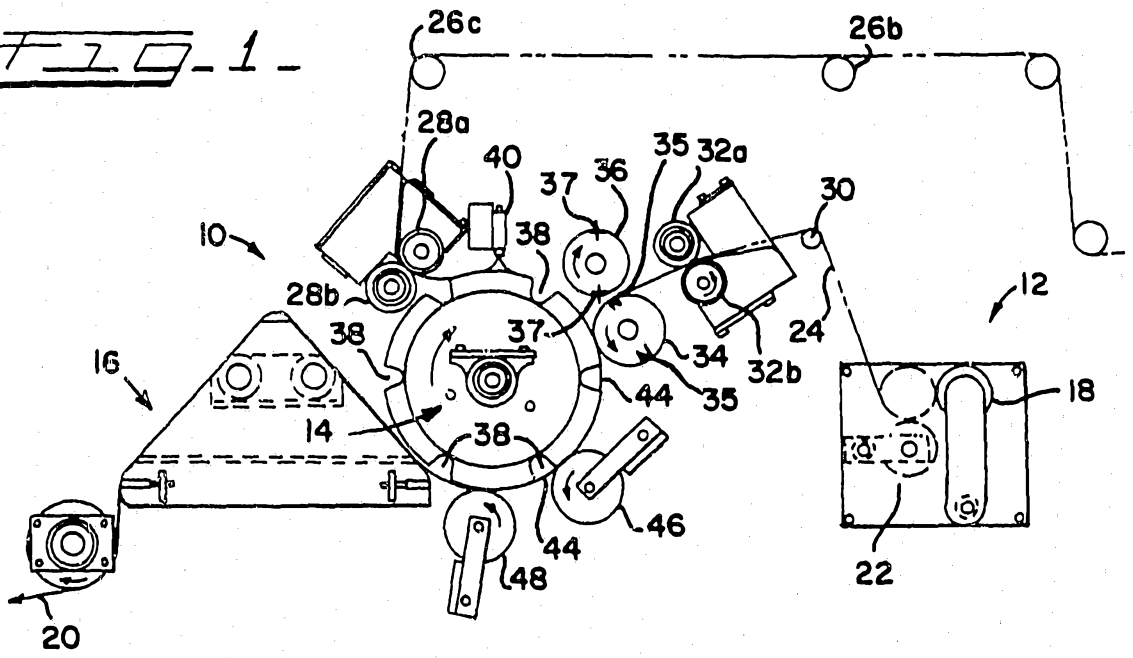

FIG. 2

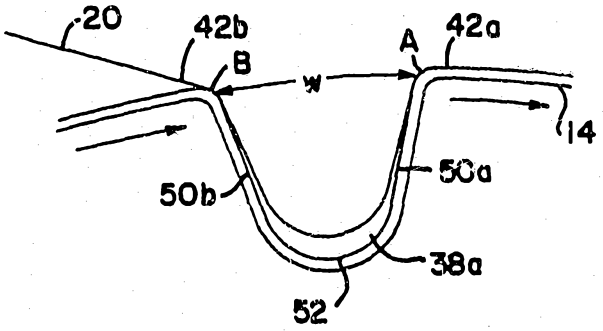

FIG. 3

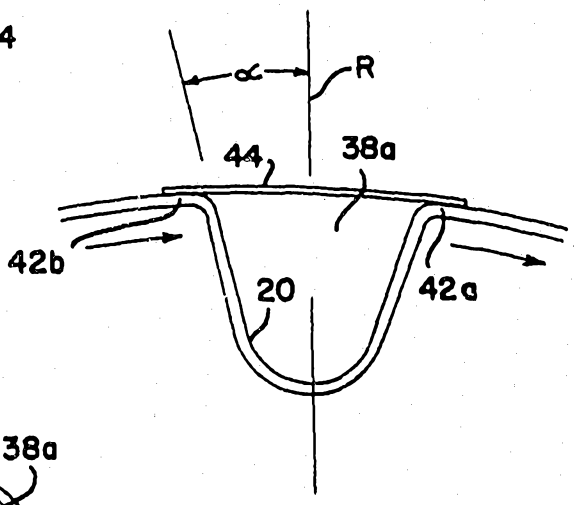

FIG. 4

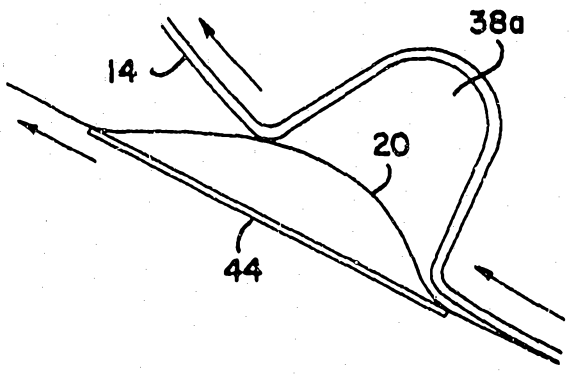

FIG-5-

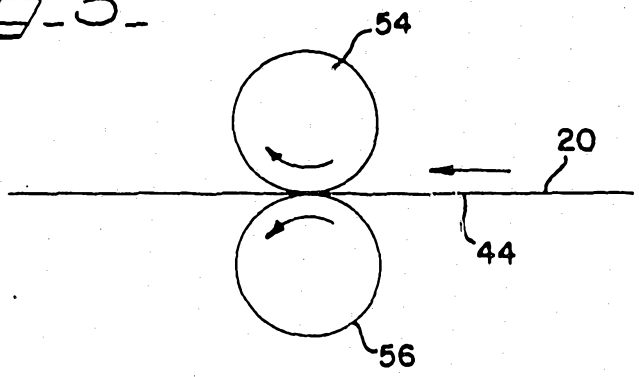

FIG-6-

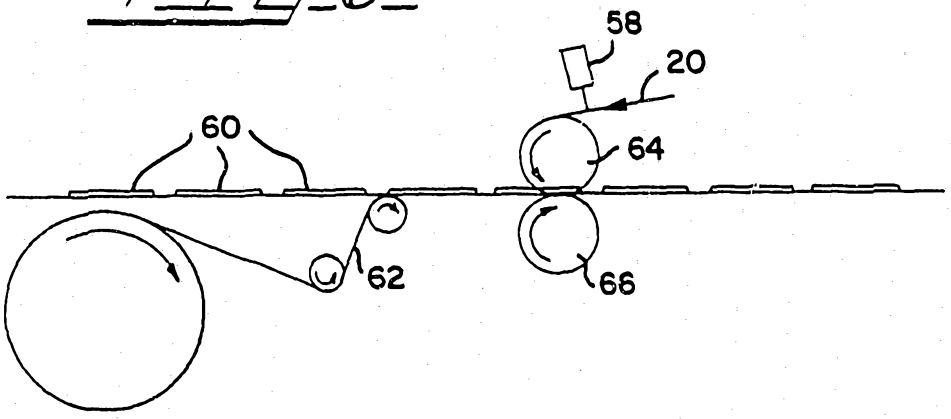

FIG-7-

