US 20050112394A1

(19) **United States**

(12) **Patent Application Publication** (10) **Pub. No.: US 2005/0112394 A1**

Pham et al. (43) **Pub. Date: May 26, 2005**

(54) **METHOD TO ELIMINATE UNDULATIONS IN A COMPOSITE PANEL**

(75) Inventors: **Doan D. Pham**, Renton, WA (US); **Michael A. Lee**, Kent, WA (US)

Correspondence Address:
SHIMOKAJI & ASSOCIATES, P.C.
1301 DOVE STREET SUITE 480
NEWPORT BEACH, CA 92660 (US)

(73) Assignee: **The Boeing Company**, Chicago, IL

(21) Appl. No.: **10/719,219**

(22) Filed: **Nov. 21, 2003**

Publication Classification

(51) **Int. Cl.**[7] **B32B 1/00**

(52) **U.S. Cl.** **428/544**; 156/285; 244/123

(57) **ABSTRACT**

A method and article of manufacture of joining a stringer to a wing or tail panel and curing a wing or tail panel is disclosed. A sheet of titanium is placed between a cured stringer and an uncured wing or tail panel. The stringer, wing or tail panel and sheet are then placed within a vacuum bag, and gas is pumped out of the bag. The bag is then placed in an auto-clave to cure the wing or tail panel.

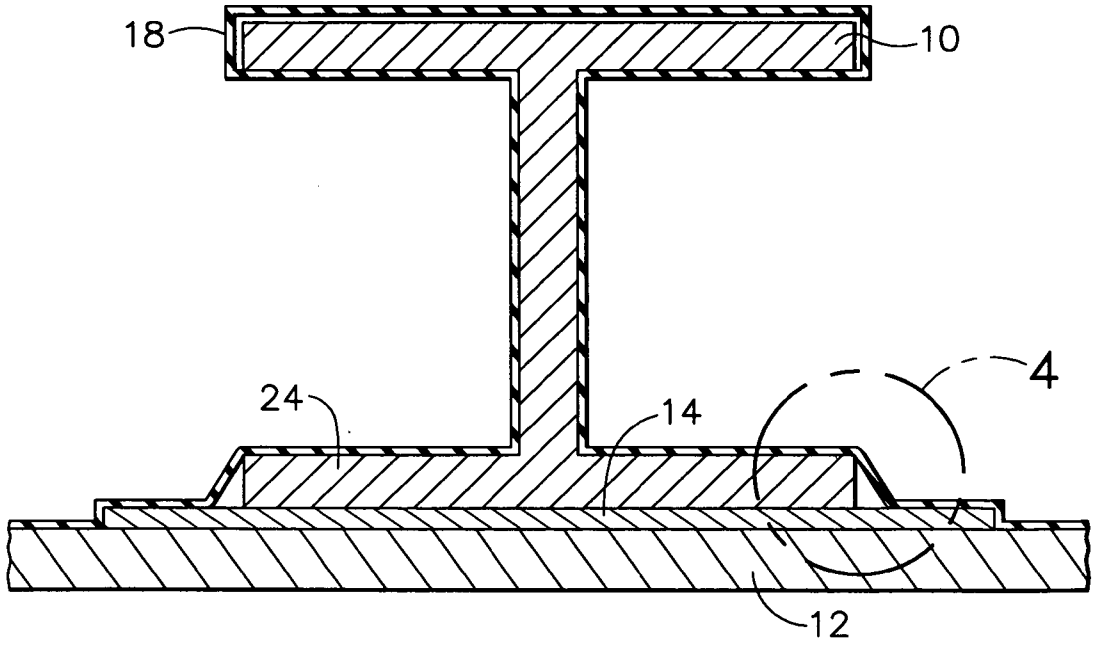

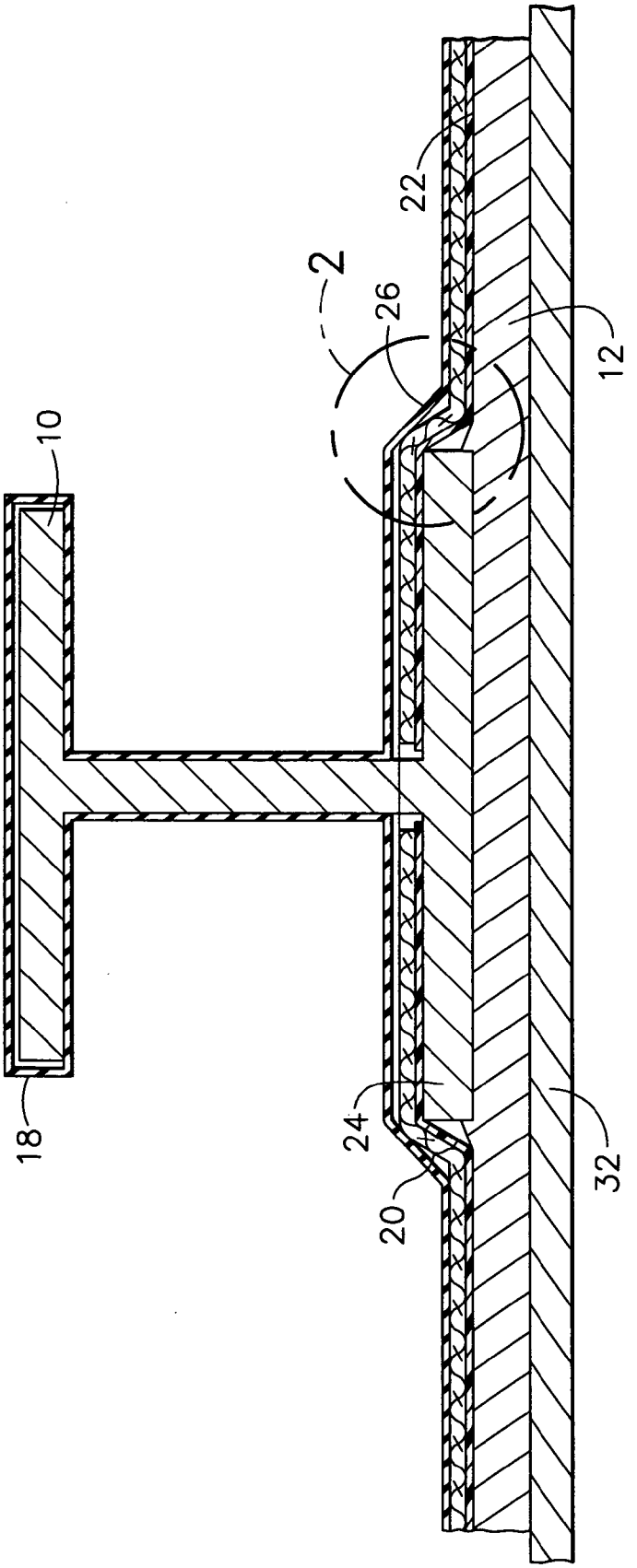

FIG. 1
(PRIOR ART)

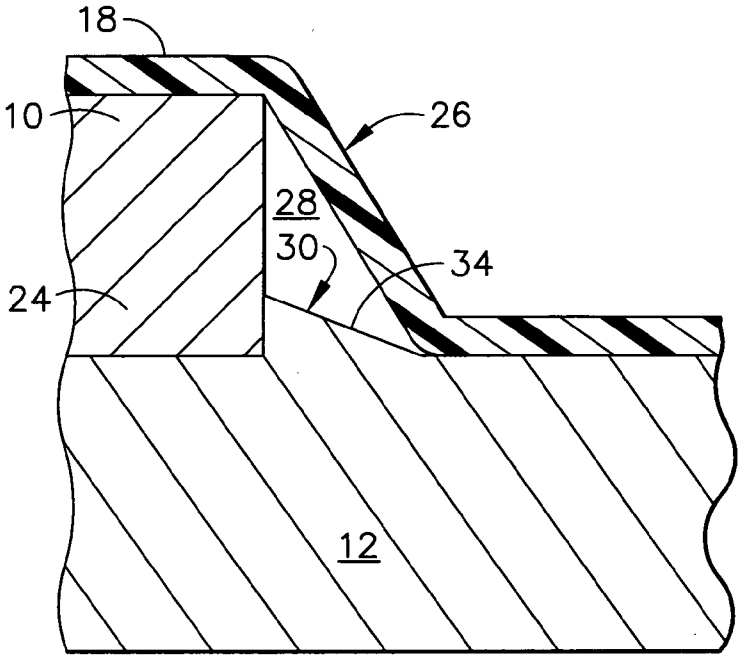

FIG. 2
(PRIOR ART)

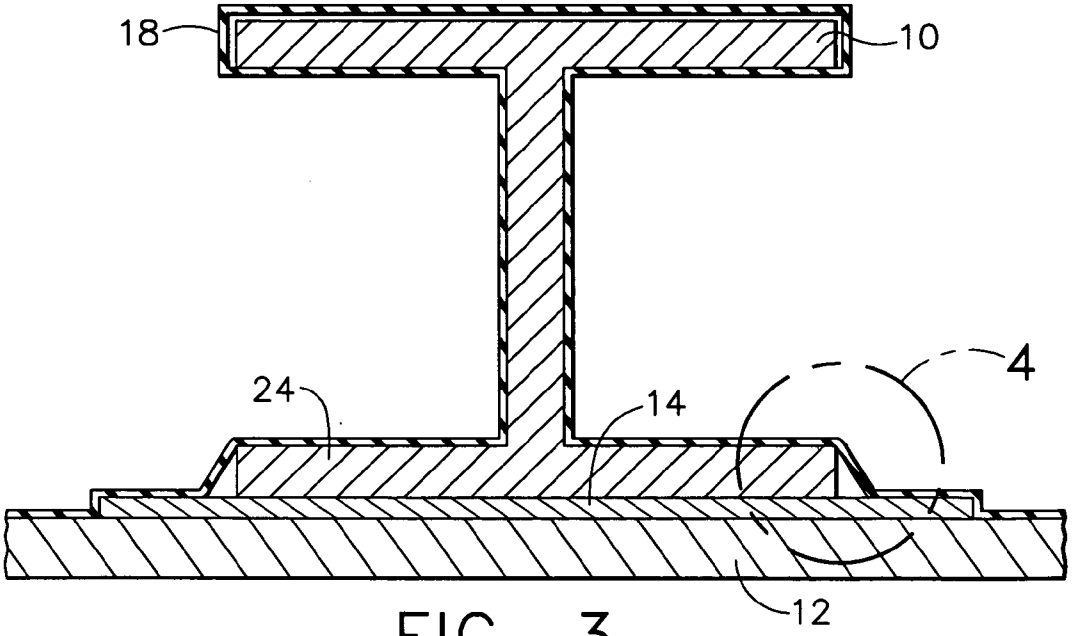

FIG. 3

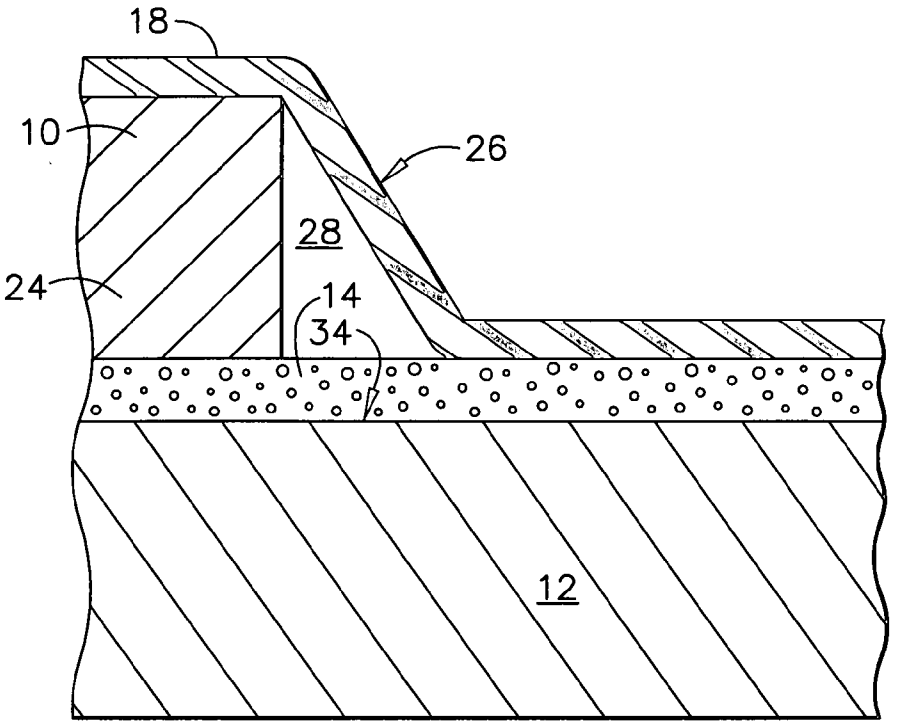

FIG. 4

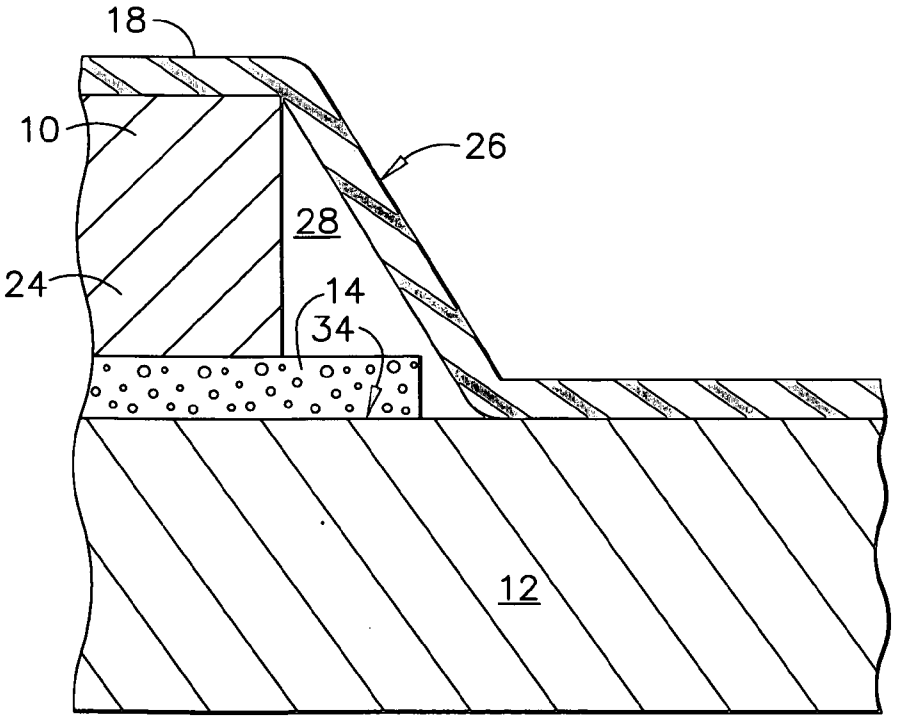

FIG. 5

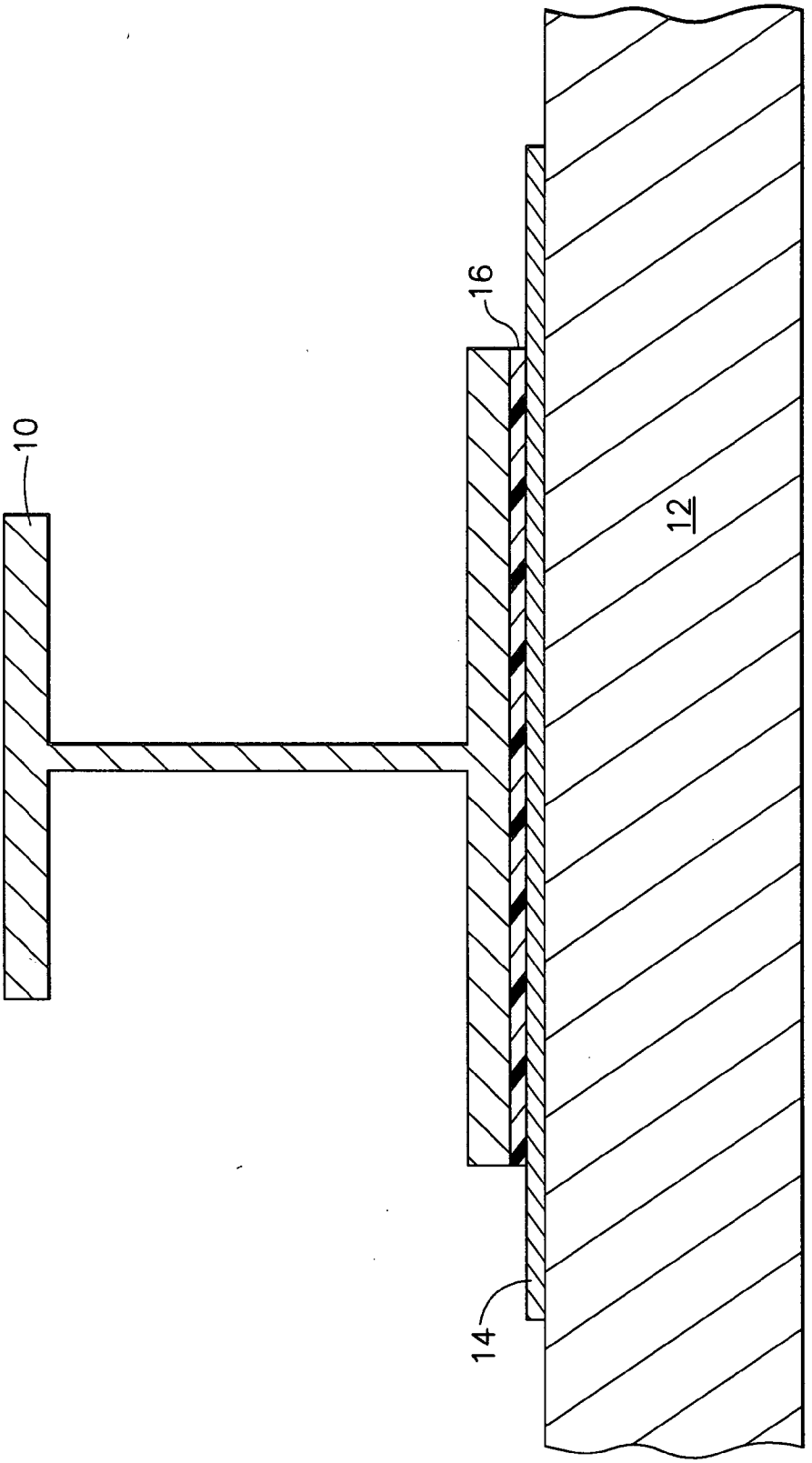

FIG. 6

METHOD TO ELIMINATE UNDULATIONS IN A COMPOSITE PANEL

BACKGROUND OF THE INVENTION

[0001] The present invention generally relates to vacuum bag molding and, more particularly, to curing resins using the vacuum bag molding process.

[0002] Referring to **FIGS. 1 and 2**, one method of vacuum-bag molding may comprise placing an uncured object such as a wing panel **12** or tail panel into a substantially gas-impermeable container or bag **18** and removing air or a gas, from the gas-impermeable bag **18** with a pump (not shown). A breather material **20** and a release film **22** may be applied between the gas-impermeable bag **18** and the wing panel **12** to prevent the gas-impermeable bag **18** from adhering to the wing panel **12** while the wing panel is curing. The gas-impermeable bag **18** and wing panel **12** are then placed on a lay-up mandrel **32** and cure in an auto-clave. The auto-clave may apply pressure and heat to consolidate layers of the curing wing panel **12** so as to remove entrapped air and volatiles, and to cure the wing panel **12**. The gas-impermeable bag **18** generally has a skin tight fit to the wing panel **12**, and thus translates the auto-clave pressure to the wing panel **12** such that there are relatively no undesired undulations of the wing layers.

[0003] However, as best shown in **FIG. 2**, there may be a low-pressure volume **28** interacting with the surface **34** of the curing wing panel **12**, where the pressure is lower than the ambient pressure produced by the auto-clave. This lower pressure volume **28** may cause an undulation **30** in a wing layer. A cause for the low pressure volume is the bridging **26** of the gas-impermeable bag **18** over the base **24** of the stringer **10** to the curing wing panel **12**, such that the auto-clave pressure does not translate to the curing wing panel **12**. This problem may occur, but is not limited to, where one or more curing objects have a geometry that causes bridging. Undulations in a layer of a composite object reduce the tensile strength of an object. Undulations also increase production time and costs, as specially prepared shims may be required to mate parts to the object with undulations; for example mating a rib to a wing panel.

[0004] Also, it may be desirable when two objects are joined, that each object be uncured. Curing an object within an auto-clave may be an expensive and time consuming process as the auto-clave is typically reheated and repressurized during each curing cycle. Joining and curing two uncured objects together would eliminate one auto-clave cycle by combing two separate cycles into one. However, each object may be composed of a different resin and if each object is uncured, the resins of each object may mix, causing undesired properties.

[0005] As can be seen, there is a need for applying a pressure to all surfaces of an object while it is curing. Also, there is a need for coupling two or more curing objects such that there is no mixing of dissimilar resins. Moreover, there is a need for producing a part that has a predictable geometry so that the part may be joined to other parts without shimming.

SUMMARY OF THE INVENTION

[0006] In one aspect of the present invention, a method of curing comprises providing a first object, providing a second object, placing a first side of a sheet adjacent to a malleable portion of the first object, placing a second side of the sheet adjacent to a non-malleable portion of the second object, placing the first object, second object and sheet into a container, and removing gas from the container where bridging occurs, where the bridging extends from the second object to the sheet.

[0007] In another aspect of the present invention, a method of curing comprises providing a first object having a malleable portion, providing a second object having a non-malleable portion, placing a first side of a sheet adjacent to the malleable portion of the first object, placing a second side of the sheet adjacent to the non-malleable portion of the second object, placing the first object, second object and sheet into a container, and removing gas from the container where bridging occurs, where the bridging extends from the second object to the first object.

[0008] In another aspect of the present invention, a method of curing an object comprises providing an object having a malleable portion, placing a first side of a sheet adjacent to the malleable portion of the object, coupling the sheet to the object, placing the object and the sheet into a container, and removing gas from the container where bridging occurs, where the sheet provides pressure to the malleable portion.

[0009] In another aspect of the present invention, a method of joining a stringer and a panel, and curing portions of the panel, comprises providing the stringer; providing the panel; placing a first side of a sheet adjacent to an uncured portion of the panel; placing a second side of the sheet adjacent to a cured portion of the stringer; placing the stringer, panel and sheet into a nylon bag; and removing gas from the nylon bag where bridging occurs.

[0010] In another aspect of the present invention, an article of manufacture comprises a first composite object having a resin portion and a fiber portion, a second composite object having a resin portion and a fiber portion coupled to the first object, and a sheet disposed between the first composite object and the second composite object, where the sheet lies adjacent to the resin portion of the first composite object and the resin portion of the second composite object.

[0011] In another aspect of the present invention, an airplane wing comprises a stringer having a resin portion, a wing panel having a resin portion and coupled to the stringer, and a sheet disposed between the stringer and the wing panel, where the sheet lies adjacent to the resin portion of the stringer and the resin portion of the wing panel.

[0012] These and other features, aspects and advantages of the present invention will become better understood with reference to the following drawings, description and claims.

BRIEF DESCRIPTION OF THE DRAWINGS

[0013] **FIG. 1** is a cross-sectional view from the side of a stringer and wing panel within a vacuum bag;

[0014] **FIG. 2** is a fragmentary view taken along line **2** of the stringer, wing panel and vacuum bag in **FIG. 1**;

[0015] **FIG. 3** is cross-sectional view from the side of a stringer, wing panel and vacuum bag according to one embodiment of the present invention;

[0016] **FIG. 4** is a fragmentary view taken along line **4** of the stringer, wing panel and vacuum bag in **FIG. 3**, according to one embodiment of the present invention;

[0017] **FIG. 5** is a fragmentary view of a stringer, wing panel and vacuum bag according to an embodiment of the present invention; and

[0018] **FIG. 6** is a cross-sectional side view of a stringer and wing panel, according to one embodiment of the present invention.

DETAILED DESCRIPTION OF THE INVENTION

[0019] The following detailed description is of the best currently contemplated modes of carrying out the invention. The description is not to be taken in a limiting sense, but is made merely for the purpose of illustrating the general principles of the invention, since the scope of the invention is best defined by the appended claims.

[0020] The present invention provides a method for curing a resin on a composite object such that low pressure areas caused by bridging of a gas-impermeable container or bag over the object, do not cause undulations in a layer of the curing resin. Such method may be used, for example, in an auto-clave. The present invention also provides an article of manufacture that is produced by the described method. The method may be used to produce articles such as airplane wings or tails.

[0021] Referring to **FIGS. 3 and 4**, in an embodiment, a substantially unmalleable object such as a cured composite stringer **10**, is joined with a malleable object such as an uncured composite object. The uncured composite object may be a wing panel **12**. Each composite object may be composed of resin and fiber. A sheet **14**, such as titanium foil, is placed on a portion of the panel **12** where the stringer **10** is joined with the uncured wing panel **12**. The sheet **14** may also comprise a metallic material, a non-metallic material and a material having a low coefficient thermal expansion, such as, but not limited to, less than 13.7×10^{-6} inches/inches degrees Fahrenheit (in/in *F). The thickness of the sheet **14** may be, but not limited to, 0.005 to 0.010 inches. The cured composite stringer **10** is then coupled to the sheet **14** using an adhesive film such as Sol-gel. Sol-gel is described in U.S. Pat. Nos. 5,814,137, 5,849,110, 5,869,140, 5,869,141, 5,939,197, 5,958,578, and 6,037,060, and each patent is herein incorporated by reference. The Sol-gel may be first applied to the sheet **14** by immersing, spraying, or drenching the sheet **14** with the Sol-gel. The sheet **14** may then be coupled to the stringer **10** before the Sol-gel has dried. The sheet **14** is then coupled to the uncured wing panel. The sheet **14** may extend from the base of the stringer **10** by, but is not limited to, between 0.25 inch and 0.50 inch.

[0022] The coupled cured composite stringer **10**, the sheet **14** and uncured wing panel **12** are then placed within a gas-impermeable container or bag **18**, the air or gas within the gas-impermeable bag **18** is pumped out, and the gas-impermeable bag **18** sealed. The gas-impermeable bag **18** may be constructed of nylon. The pressure within the gas-impermeable bag **18** may at a pressure typically below ambient atmospheric pressure such as for example, but not limited to, between 25 inches of mercury to 29 inches of mercury.

[0023] The gas-impermeable bag **18** and its contents are then placed within an auto-clave. The pressure within the auto-clave may be elevated above ambient atmospheric pressure, for example, but not limited to, between 45 and 150 pounds per square inch. The temperature within the auto-clave may be raised above ambient temperature, for example, but not limited to, between 250 to 450 degrees Fahrenheit. The pressure differential between the inside of the gas-impermeable bag **18** and the pressure within the auto-clave causes the gas-impermeable bag **18** to have a skin tight fit over the cured composite stringer **10**, the sheet **14** and the curing wing panel **12**. There is bridging **26** of the gas-permeable bag from the base **24** of the stringer to the sheet **14**, where the gas-permeable bag **24** does not transfer auto-clave pressure to either the sheet **14** or the curing wing panel **12**.

[0024] The gas-impermeable bag **18** is in contact with the sheet **14** such that the gas-impermeable bag **18** applies a force on the sheet **14** towards the curing wing panel **12**. The sheet **14** extends from the stringer base **24** to the gas-impermeable bag **18** along the surface **34** of the wing panel. The pressure differential between the auto-clave pressure and the pressure within the gas-impermeable bag **18** causes the gas-impermeable bag **18** to exert force on the sheet **14** towards the curing wing panel **12**. The sheet **14** resists bending by the low-pressure volume **28** contained within the bridging, such that the sheet **14** applies pressure on the curing wing panel **12**. Thus, the sheet **14** prevents undulations—such as the undulation **30** shown in **FIG. 2**—from occurring in the curing wing panel **12**.

[0025] Referring to **FIG. 5**, in another embodiment, the gas-impermeable bag **18** does not contact the sheet **14** during the curing process, such that the gas-impermeable bag **18** does not apply a force on the sheet **14** towards the curing wing panel **12**. The thickness of the sheet **14** is sufficient to resist bending by the low-pressure volume **28** contained within the bridging **26**, such that the sheet **14** applies pressure on the wing panel **12** as the wing panel **12** cures.

[0026] In another embodiment, similar to that shown in **FIGS. 3 through 5**, an uncured stringer **10** is coupled, for example, using adhesive Sol-gel, to an uncured wing panel **12**. The Sol-gel may be first applied to the sheet **14** by immersing, spraying, or drenching the sheet **14** with the Sol-gel. The sheet **14** may then be placed between the uncured stringer **10** and uncured wing panel **12** as the sheet **14** and uncured stringer **10** are coupled. The sheet **14** prevents the mixing of the resins of the uncured stringer **10** and the uncured wing panel **12**. The uncured stringer **10**, sheet **14** and uncured wing panel **12** are then placed within a gas-impermeable bag **18**, and the gas-impermeable bag **18** is placed within an auto-clave to cure the stringer **10** and wing panel **12**.

[0027] In another embodiment, similar to that shown in **FIGS. 3 through 5**, pre-preg material such as a partially cured stringer **10** is coupled to an uncured wing panel **12**. A sheet **14** is placed between the partially cured stringer **10** and uncured wing panel **14**. The partial curing reduces the possibility of the mixing of the resins of the stringer **10** and the wing panel **12**. The partially cured stringer **10**, sheet **14** and uncured wing panel **12** are then placed within a gas-

impermeable bag **18**, and the gas-impermeable bag **18** is placed within an auto-clave to cure the stringer **10** and wing panel **12**.

[**0028**] In another embodiment, similar to that shown in **FIGS. 3 through 5**, a non-composite material such as a titanium stringer **10** is coupled to an uncured wing panel **12**. A sheet **14** is placed between the titanium stringer **10** and uncured wing panel **12**. The titanium stringer **10**, sheet **14** and uncured wing panel **12** are then placed within a gas-impermeable bag **18**, and the gas-impermeable bag **18** is placed within an auto-clave. The sheet **14** applies pressure to the uncured wing panel **12** and prevents undulations from forming during curing.

[**0029**] **FIG. 6** illustrates one embodiment of a finished article, produced by, for example, the method illustrated in **FIGS. 3 and 4**, where a cured stringer **10** is coupled to a sheet **14** using a film of Sol-gel **16** and the sheet **14** is connected to a cured wing panel **12**. The coupled stringer **10** and wing panel **14** may then be used, along with other wing elements such as rib chords, to form a wing.

[**0030**] It should be understood, of course, that the foregoing relates to preferred embodiments of the invention and that modifications may be made without departing from the spirit and scope of the invention as set forth in the following claims.

1. A method of curing comprising:

providing a first object;

providing a second object;

placing a first side of a sheet adjacent to a malleable portion of said first object;

placing a second side of said sheet adjacent to a non-malleable portion of said second object;

placing said first object, second object and sheet into a container; and

removing gas from said container where bridging occurs;

where said bridging extends from said second object to said sheet.

2. The method of claim 1 where said step of placing said first object, second object and sheet into a container comprises:

placing a sheet having coefficient of thermal expansion less than 13.7×10^{-6} inch/inch degree Fahrenheit per inch into said container.

3. The method of claim 1 where said step of removing gas from said container where bridging occurs comprises:

attaching a pump to said container;

removing gas from said container; and

providing a pressure within said container between 25 inches of mercury to 29 inches of mercury.

4. The method of claim 1, further comprising:

placing said container into an auto-clave; and

providing a pressure between 45 pounds per square inch and 150 pounds per square inch on the outer surface of said container.

5. The method of claim 1, further comprising:

placing said container into an auto-clave; and

providing a temperature between 250 degrees Fahrenheit and 450 degrees Fahrenheit.

6. The method of claim 1, further comprising:

positioning said sheet where said sheet extends between 0.25 inches to 0.50 inches from said second object.

7. A product of the process defined in claim 1.

8. A method of curing comprising:

providing a first object having a malleable portion;

providing a second object having a non-malleable portion;

placing a first side of a sheet adjacent to said malleable portion of said first object;

placing a second side of said sheet adjacent to said non-malleable portion of said second object;

placing said first object, second object and sheet into a container; and

removing gas from said container where bridging occurs;

where said bridging extends from said second object to said first object.

9. The method of claim 8 where said step of placing a first side of a sheet adjacent to said malleable portion of said first object comprises:

placing a first side of a titanium sheet adjacent to said malleable portion of said first object.

10. The method of claim 8 where said step of placing a first side of a sheet adjacent to said malleable portion of said first object comprises:

placing a first side of said sheet adjacent to an uncured stringer.

11. The method of claim 8, where said step of placing a second side of said sheet adjacent to said non-malleable portion of said second object comprises:

placing a second side of said sheet adjacent to a stringer.

12. The method of claim 8, further comprising:

placing said container into an auto-clave; and

providing a temperature above ambient atmospheric temperature.

13. The method of claim 8 where said step of placing a second side of said sheet adjacent to said non-malleable portion of said second object comprises:

positioning said sheet where said sheet extends between a quarter inch and a half inch from said second object.

14. The method of claim 8 where said step of placing a first side of a sheet adjacent to said malleable portion of said first object comprises:

placing a sheet of titanium foil having a thickness between five thousandth of an inch and ten thousandth of an inch adjacent to an uncured wing panel.

15. A product of the process defined in claim 8.

16. A method of curing an object comprising:

providing an object having a malleable portion;

placing a first side of a sheet adjacent to said malleable portion of said object;

coupling said sheet to said object;

placing said object and said sheet into a container; and

removing gas from said container where bridging occurs;

where said sheet provides pressure to said malleable portion.

17. The method of claim 16 where said step of removing gas from said container where bridging occurs comprises:

lowering pressure within said container where said bridging extends from a portion of said object to said sheet.

18. The method of claim 16 where said step of removing gas from said container where bridging occurs comprises:

lowering pressure within said container where said bridging extends from a first portion of said object to a second portion of said object.

19. The method of claim 16 where said step of coupling said sheet to said object comprises:

applying Sol-gel to said first side of said sheet; and

coupling said sheet to said object.

20. A product of the process defined in claim 16.

21. A method of joining a stringer and a panel, and curing portions of said panel, comprising:

providing said stringer;

providing said panel;

placing a first side of a sheet adjacent to an uncured portion of said wing panel;

placing a second side of said sheet adjacent to a cured portion of said stringer;

placing said stringer, panel and sheet into a nylon bag; and

removing gas from said nylon bag where bridging occurs.

22. The method of claim 21, where said bridging extends from said stringer to said sheet.

23. The method of claim 21, where said bridging extends from said stringer to said panel.

24. The method of claim 21 where said step of placing a first side of a sheet adjacent to an uncured portion of said panel comprises:

applying a film of Sol-gel between said first side of said sheet and said uncured portion of said panel, and;

joining said sheet to said uncured portion of said panel.

25. The method of claim 21 where said step of placing said stringer, panel and sheet into a nylon bag comprises:

applying breather material between said stringer and said sheet.

26. The method of claim 21 where said step of placing said stringer, panel and sheet into a nylon bag comprises:

applying a release film between said stringer and said sheet.

27. The method of claim 21 where said step of placing a first side of a sheet adjacent to an uncured portion of said panel comprises:

placing a first side of a sheet of titanium having a thickness between 0.005 inches and 0.010 inches, adjacent to an uncured portion of said wing panel.

28. An article of manufacture comprising:

a first composite object having a resin portion and a fiber portion;

a second composite object having a resin portion and a fiber portion coupled to said first object; and

a sheet disposed between said first composite object and said second composite object,

where said sheet lies adjacent to said resin portion of said first composite object and said resin portion of said second composite object.

29. The article of manufacture of claim 28 where said sheet has a coefficient of thermal expansion less than 13.7×10^{-6} inch/inch degree Fahrenheit.

30. The article of manufacture of claim 28 where said sheet extends between 0.25 inches and 0.50 inches from said second composite object.

31. The article of manufacture of claim 28 where said sheet has a thickness between 0.005 inches and 0.010 inches.

32. An airplane wing comprising:

a stringer having a resin portion;

a wing panel having a resin portion coupled to said stringer; and

a sheet disposed between said stringer and said wing panel;

where said sheet lies adjacent to said resin portion of said stringer and said resin portion of said wing panel.

33. The airplane wing of claim 32 where said sheet has a coefficient of thermal expansion less than 13.7×10^{-6} inch/inch degrees Fahrenheit.

34. The airplane wing of claim 32 where said sheet extends between a quarter inch and a half inch from said second composite object.

35. The airplane wing of claim 32 where said sheet has a thickness between 0.005 inches and 0.010 inches.

* * * * *