June 20, 1939. V. E. HEYWOOD 2,163,037

MANUFACTURE OF DRY-SEALING ENVELOPES

Filed March 24, 1936 4 Sheets-Sheet 1

Fig. 1.

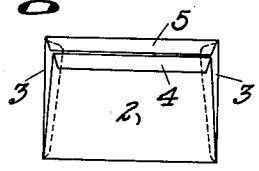

Fig. 1a.

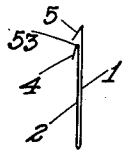

Fig. 1b.

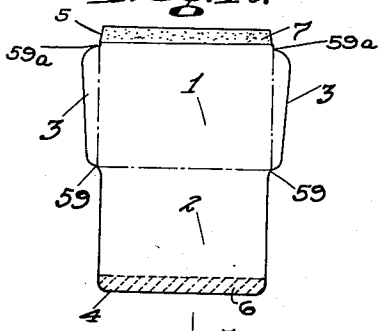

Fig. 6.

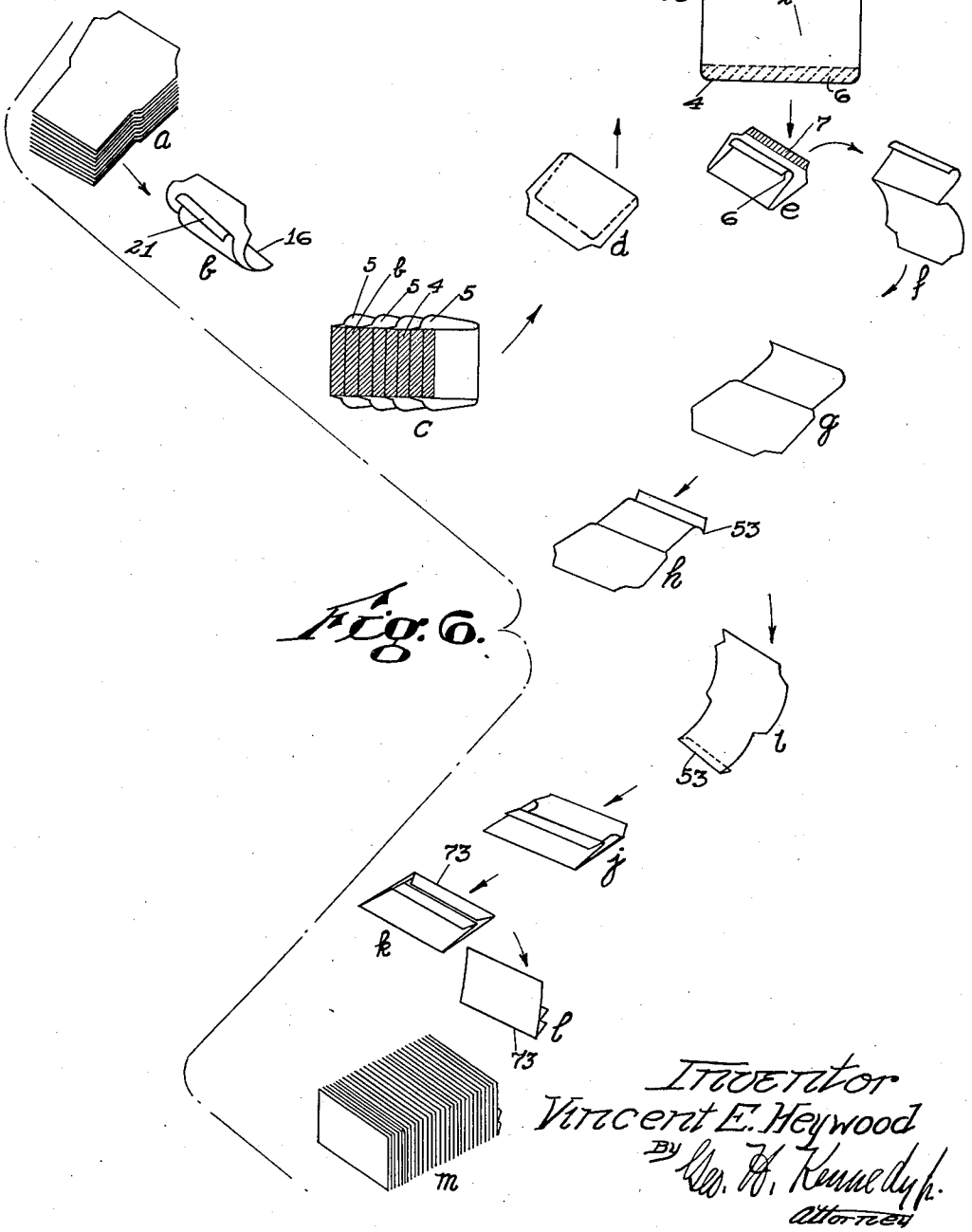

Inventor
Vincent E. Heywood
By Wm. H. Kennedy Jr.
Attorney

June 20, 1939. V. E. HEYWOOD 2,163,037

MANUFACTURE OF DRY-SEALING ENVELOPES

Filed March 24, 1936 4 Sheets-Sheet 2

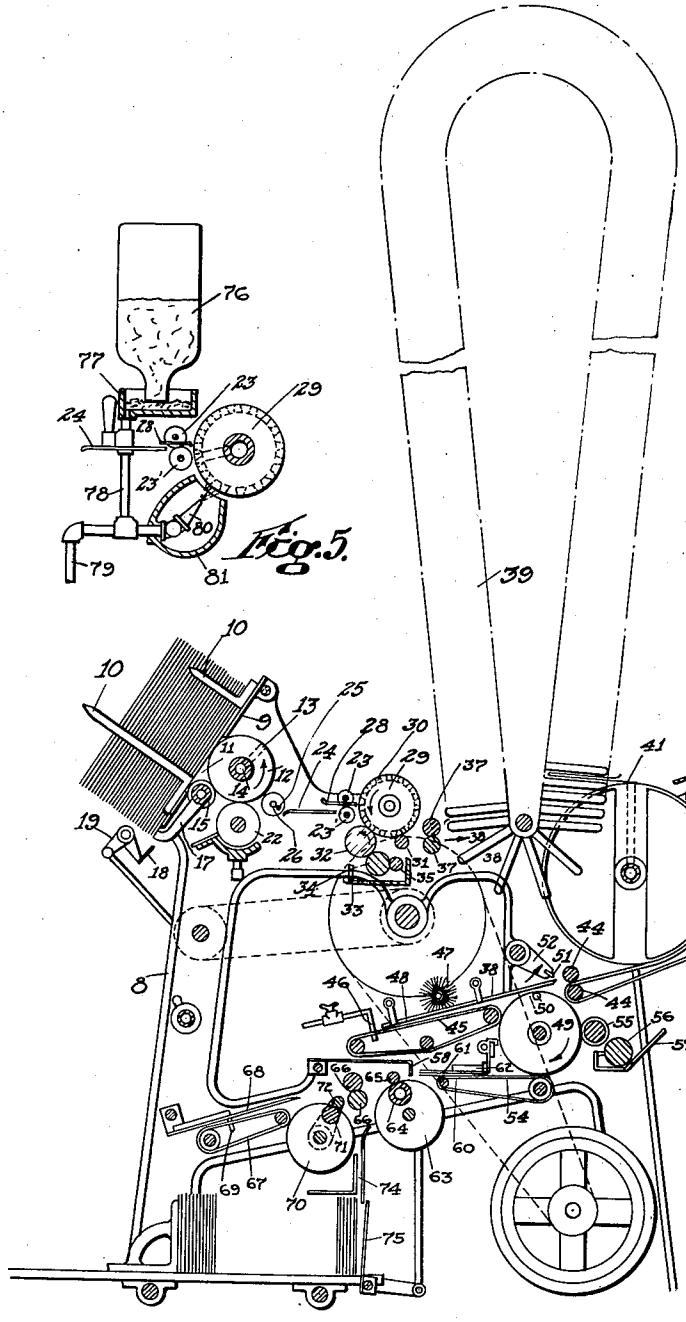

Fig. 2.

Fig. 5.

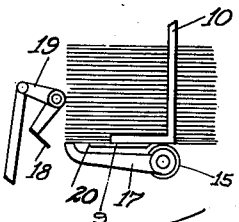

Fig. 3.

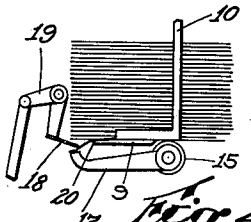

Fig. 4.

Inventor:
Vincent E. Heywood
By Geo. H. Kennedy Jr.
Attorney

June 20, 1939. V. E. HEYWOOD 2,163,037

MANUFACTURE OF DRY-SEALING ENVELOPES

Filed March 24, 1936 4 Sheets-Sheet 3

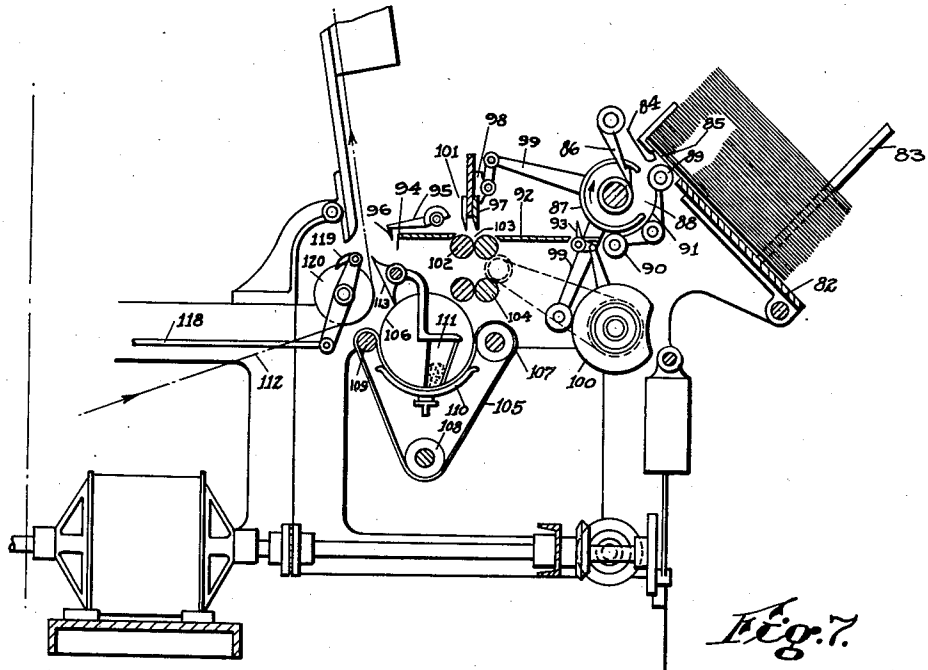

Fig. 7.

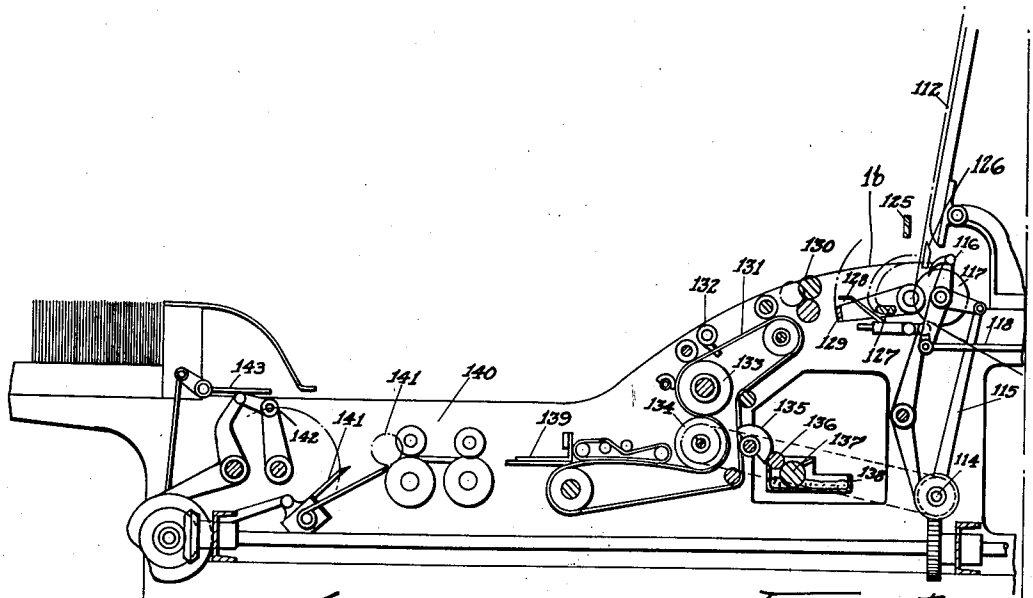

Fig. 8.

Inventor:
Vincent E. Heywood
By Geo. H. Kennedy Jr.
Attorney

June 20, 1939. V. E. HEYWOOD 2,163,037

MANUFACTURE OF DRY-SEALING ENVELOPES

Filed March 24, 1936 4 Sheets-Sheet 4

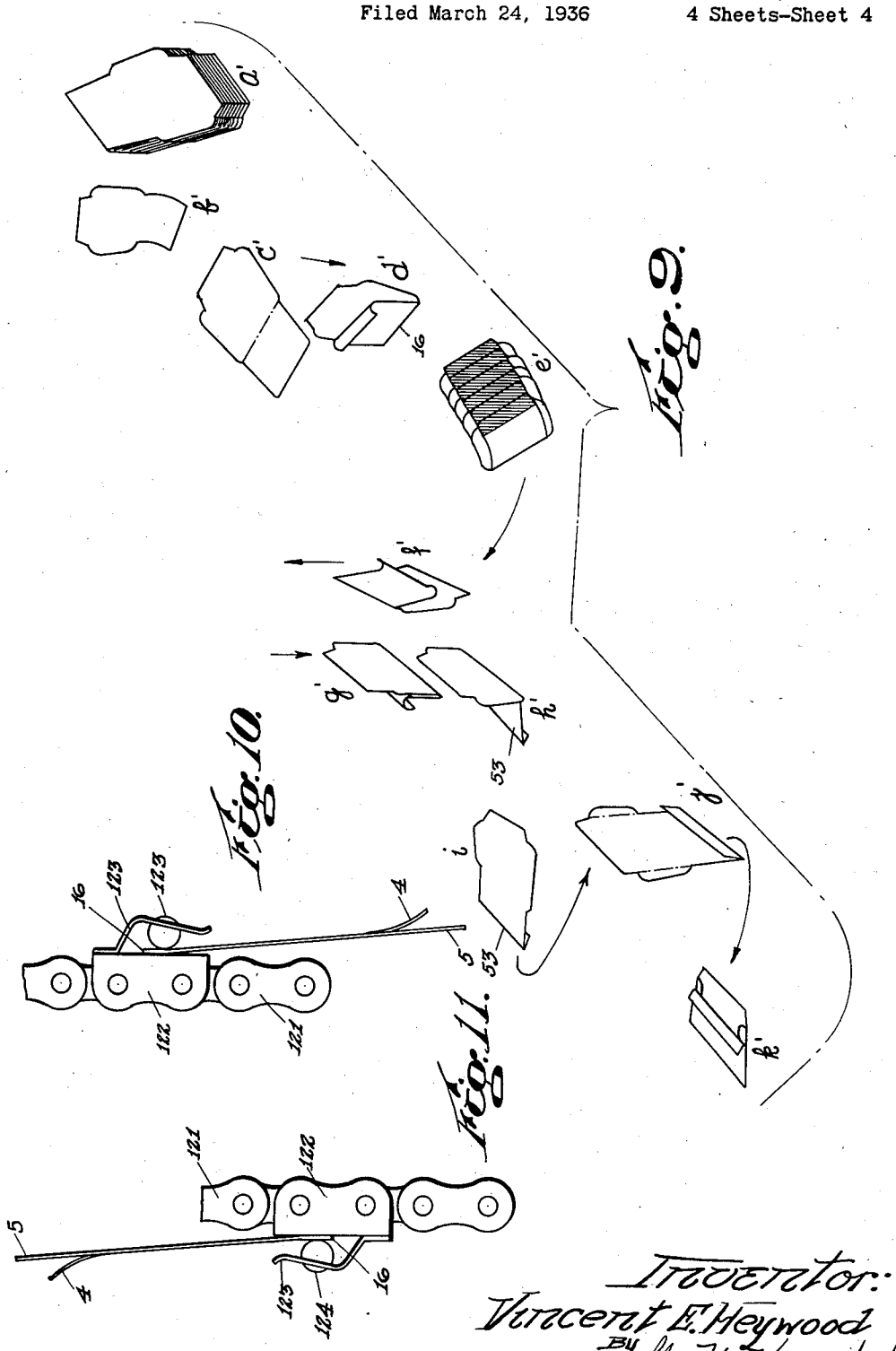

Inventor:
Vincent E. Heywood
By Wm. W. Kennedy Jr.
attorney

Patented June 20, 1939 2,163,037

UNITED STATES PATENT OFFICE

2,163,037

MANUFACTURE OF DRY-SEALING ENVELOPES

Vincent E. Heywood, Worcester, Mass., assignor to United States Envelope Company, Springfield, Mass., a corporation of Maine

Application March 24, 1936, Serial No. 70,619

41 Claims. (Cl. 93—62)

The present invention relates to methods of and apparatus for the manufacture of envelopes of the so-called "dry-sealing" type, being envelopes adapted to be adhesively sealed without need for any wetting or moistening of adhesive-coated areas. In such a dry-sealing envelope, matching areas on the closure flap and on the envelope body, respectively, provide bands of dry or substantially dry adhesive (obtained by coating said areas with rubber latex, or a rubber cement in liquid form and then allowing such coatings to dry out)—the coatings when dried having the property of adhering to each other, but not to uncoated areas of the envelope material, and this property being availed of to obtain the sealing of the envelope merely by the act of pressing the two coated areas into contact with each other.

Such a dry-sealing envelope, of a structure which normally maintains its two cooperating adhesive areas out of contact, and protected from exposure and dirt, is shown and described by Vogel Patent No. 1,944,020, January 16, 1934. For illustrative purposes, I have shown my invention as applied to the manufacture of this patented Vogel envelope—but it will be understood that such showing is merely by way of example, and that my invention is not limited to the production of any particular type or style of dry-sealing envelope, except as may be specified in the appended claims.

My invention is particularly concerned with the method and the means employed for producing on each envelope, or on the blank therefor, its two cooperating dry-adhesive-coated areas—such means and method of my invention involving radical departures from previous practices in the manufacture of dry-sealing envelopes. Other and further objects and advantages of the invention will be made apparent in the following detailed description thereof, taken in connection with the accompanying drawings, in which—

Fig. 1 shows in rear elevation the aforesaid patented Vogel dry-seal envelope—adapted to be produced by my invention.

Fig. 1*a* is a sectional view of said envelope in open or unsealed condition.

Fig. 1*b* illustrates the blank from which said envelope is made.

Fig. 2 is a view in side elevation, partly in section, of mechanism, illustrative of my invention, for the manufacture of such envelopes.

Figs. 3 and 4 are large scale fragmentary views illustrating two different positions of certain blank-warping instrumentalities provided by the mechanism of Fig. 2.

Fig. 5 is a fragmentary view in side elevation, illustrating, in connection with the mechanism of Fig. 1, a modification of the means employed for applying the dry-sealing adhesive coatings.

Fig. 6 is a schematic or diagrammatic view, illustrating by successive stages or steps marked *a*, *b*, *c*, etc., the sequence of the operations performed on the envelope blanks by the mechanisms of Figs. 2, 3, 4 and 5 in the manufacture of said envelopes—but for the sake of clearance, the blanks in process shown by stage or step *c* appear as viewed from underneath.

Figs. 7 and 8, as joined end to end at their respective dot and dash lines, illustrate in side elevation, partly in section, a modified form of mechanism, according to my invention, for producing the envelope of Fig. 1.

Fig. 9 is a schematic or diagrammatic view similar to Fig. 6, illustrating by successive stages or steps marked *a*, *b*, *c*, etc., the sequence of the operations performed on the envelope blanks by the mechanisms of Figs. 7 and 8 in the manufacture of said envelopes.

Figs. 10 and 11 are fragmentary large scale detail views illustrating, respectively, the ascending and descending sides of the drying chain shown in Figs. 7 and 8.

Like reference characters refer to like parts in the different figures.

Referring first to Figs. 1, 1*a* and 1*b*, the portion 1 of the blank provides the envelope's front wall, while the rear wall is provided by the overlapping adhesive attachment of blank portion 2 to infolded side flaps 3, 3. The upper extremity of folded portion 2 is left free and unsecured, to provide a flap 4 adjacent to the seal flap 5. With both flaps 4 and 5 folded down as shown, their respective coatings 6 and 7 of dry-sealing adhesive are on the inside, and thus fully protected from exposure and from accidental contact with each other in the packing and handling of the envelope. In the use of said envelope, the seal flap 5 is first lifted, giving access to the pocket for the insertion of an inclosure; then, after flap 4 has been turned up and over through approximately 180°, to expose its coated area 6, the sealing of the envelope is effected by simply pressing down the closure flap 5 to contact its coated area 7 with the coated area 6, in the absence of any need for moistening either of said areas.

Heretofore, a complicated and protracted procedure has been in use for the manufacture of dry-sealing envelopes of this type, wherein it will be noted the coated areas 6 and 7 must be on opposite surfaces of the blank or sheet from which the envelope is made. This circumstance, coupled with the fact that the usual coating materials (latex or rubber-cement solutions) are difficult to apply to paper by the use of ordinary gumming dies, gumming rollers, and the like, had made it expedient, in the application of these coating liquids, to virtually flow the same in a continuous film onto the areas to be coated—this mode of treatment having given rise to the practice (see Winkler et al. Patent No. 2,019,946,

November 5, 1935) of so shingling or stepping a succession of the flat blanks (Fig. 1*b*) as to expose in the movement of the shingled blank assembly past the open mouth of a receptacle containing such coating liquid only the limited area of each blank which it is desired to coat with such solution, the latter thus being spread in a substantially continuous film to cover only the successive blank areas so exposed (for example, only the flap areas 7, 7 of a succession of the shingled flat blanks of Fig. 1*b*.

According to the aforesaid patented Winkler et al. procedure, the so-coated blanks are maintained in shingled or stepped relation while advancing progressively through a drying chamber—the prolonged travel through such chamber procuring the evaporation of the liquid from said so-coated areas 7, 7; then, with the blanks still maintained in such shingled relation, the entire operation (coating and prolonged drying) has to be repeated for the exposed flap areas 6, 6 on the reverse or opposite side of the travelling shingled assembly of flat blanks. That is to say, in the aforesaid patented Winkler et al. mechanism, each flat blank is first coated on one edge 7 with the liquid dry-sealing substance, and then subjected to a prolonged drying period for the evaporation of the liquid; next, the other edge 6 must be similarly coated, following which a second prolonged period for drying and evaporation is necessary. Not until the blank is fully dried after its second application of the coating liquid can it be delivered to the creasing, folding and gluing instrumentalities which convert it into the envelope structure shown by Fig. 1.

My invention is predicated on a radical departure from the above-described Winkler et al. method of manufacture—in that according to my invention each blank (Fig. 1*b*), prior to any application of the coating liquid to either of the flap areas 4 and 5, is manipulated so as to dispose and hold immediately adjacent to each other the two surfaces of flaps 4 and 5 that are to receive the coatings. Thus, in contrast to the initial multiple blank shingling operation of the prior method of manufacture, the initial operation in my improved method of manufacture is one which places the two areas 4 and 5 of each individual blank in shingled relation; as a consequence, with each such blank, the two areas can be coated at one and the same application, and these two areas can dry simultaneously—this materially cutting down the duration of the manufacturing process and very materially reducing the space occupied by the drying instrumentalities. An organization of mechanism for carrying out my improved method of manufacture is shown in Fig. 2, and the same will now be described in detail, with reference to the schematic showing of Fig. 6, which depicts the successive stages of the process.

Referring to Fig. 2, the machine framework 8 supports an inclined plate 9, whereon is received between suitable posts 10, 10 a stack or pile of the blanks (Fig. 1*b*), with their inside faces uppermost, and in the relative position indicated at *a*, Fig. 6. The lowermost blank of the stack bridges a transverse opening 11 of plate 9, through which projects, into substantially tangential relation to said lowermost blank, a portion of the periphery of a roller 12 which rotates counterclockwise. The surface of roller 12 provides a suction opening 13 elongated in the direction of said roller's axis, or transversely to said lowermost blank, said opening 13 communicating with a suitable interior passage 14 which, by the rotation of roller 12, is alternately connected to and disconnected from a source of vacuum, by any suitable valve, not shown.

Said valve, as opening 13 approaches the lowermost blank, produces suction through said opening to seize said blank transversely across its middle portion and draw it down through the opening 11 of plate 9—this seizure and movement by roller 12, in conjunction with an adjacent roller 15 over which the back portion 2 is drawn, producing (see *b*, Fig. 6) a transverse line of fold 16 in the blank, by the passage of its central transverse portion between said cooperating rollers 12 and 15; as the thus folded edge 16 emerges from the bight of rollers 12 and 15, the suction through opening 13 is broken—being reestablished, however, in the ensuing rotation of roller 12, just as the opening 13 arrives in contact with the succeeding lowermost blank of the stack.

The above described manipulation, (in this instance forming the transverse fold 16), results in disposing, right next to each other, those surfaces of the seal flap 5 and the marginal portion 4 which are to receive the coating liquid—being surfaces which, except for such manipulation of the blank, would be on opposite sides thereof. Consequently, each blank can receive a single application of the coating liquid for the two areas thereof to be coated, said two areas or surfaces having been brought into juxtaposition so that they constitute, in effect, only a single area. This enables the two coated areas to be dried at one and the same operation; for this purpose, the blank can be opened or left folded as desired. If left folded during such drying, as here shown, the film of dry-adhesive substance that covers the two areas may cause some difficulty from the tendency of the two areas to be stuck together by said film; consequently, my invention preferably makes provision for avoiding such difficulty by preliminarily imparting to the margin 4 a definite tendency to curl or spring away from the adjacent flap 5 when the blank is given the transverse fold 16, thus to insure, as soon as the blank emerges from the coating instrumentalities, the separation of the two adjacent surfaces which are wet with the coating solution. In the arrangement of mechanism shown by Fig. 2, each blank, before and during its withdrawal from the stack, is acted upon as follows:

Referring to Figs. 2, 3 and 4, it will be noted that the margins 4 of the stacked blanks overhang the lower edge of plate 9, the lowermost margin being engageable by the end of a hollow arm 17, here shown as pivoted on the shaft of roller 15. The interior of arm 17 is suitably connected to a source of vacuum, not shown, and said arm, by any suitable connection to the drive of roller 12, is caused to oscillate between its respective positions shown by Figs. 3 and 4, in timed relation to the rotation of roller 12, and also in timed relation to the movements of a tucker bar 18, mounted on one arm of an oscillatory bell crank lever 19. The operation of these parts is as follows:

Before a blank is seized as above described by suction opening 13, the suction through arm 17 is made effective on the overhanging margin 4 of said blank, the arm 17 then moving downwardly into the position shown by Fig. 4 to bend said margin over the edge 20 of plate 9; just before the blank withdrawal movement by roller 12 begins, the tucker bar 18 moves inwardly to strip the margin 4 from the arm 17, this movement turning back the edge of said margin be-

neath the edge 20 of plate 9. In this position of margin 4 as maintained by tucker bar 18, the immediately ensuing seizure and withdrawal of the blank by the action of suction roller 12 compels the material of margin 4 to be drawn frictionally around the plate edge 20 in such manner as to impart to said margin a definite outward curl 21, as clearly shown in position b, Fig. 6; this curl persists in the blank material, notwithstanding its being temporarily flattened out by the passage of the blank between the rollers 12 and 15 and by its passage through the printing and adhesive coating instrumentalities now to be described.

Each envelope blank, as thus precurled and prefolded by the mechanism which effects its withdrawal from the stack, passes, fold 16 foremost, between the rollers 12 and 15 and then between the roller 12 and another roller 22, the latter, if desired, being utilized to print any suitable instructions or the like on the downwardly-facing surfaces of the partly-folded blank, viz., the outer surface of the back portion 2 and the inner surface of the seal flap 5; in any event, the rollers 12 and 22 serve to project the successively withdrawn partly-folded blanks, fold foremost, into the bight of slowly turning shingling rolls 23, 23', the latter being disposed at the forward end of a suitable guide 24 which affords support for each so-projected blank, the rear or trailing end of which, in overhanging relation to said guide 24, is preferably depressed by engagement therewith of a transverse rod 25 which travels in a circular path about an axis 26; such momentary depression insures that the next-projected partly-folded blank from rollers 12 and 22 will always overlie the blank previously received on guide 24—the result being that the folded blanks emerge continuously from the slowly-running rolls 23, 23' in an orderly shingled assembly, the under surface of which (see c, Fig. 6) exposes only the seal flaps 5, 5 and marginal portions 4, 4, necessarily in alternating relation.

The thus-shingled assemblage of partly-folded blanks emerging from the rolls 23, 23' is deflected downwardly by a suitable comb 28, so as to pass between the roll 23' and a larger roll 29, the latter provided on its surface with a plurality of rows of suction openings 30, 30, which are effective in the counterclockwise rotation of roller 29 from a point substantially adjacent the roll 23 to a point substantially adjacent a pair of spaced alined rollers 31, only one of which appears in Fig. 2; said rollers 31 underlie the side flaps 3, 3 of the shingled blanks, being spaced apart axially so as to avoid engagement with the flaps or margins 4, 4 and 5, 5 which, as hereinafter described, receive a coating of the dry-adhesive solution, as the assembly passes between the two points above specified (between roll 23 and rollers 31). The suction openings 30 are effective between these two points to hold the upper side of the travelling assembly of shingled blanks against the periphery of roll 29; the suction lets go as the openings 30 move past the rollers 31, 31, the latter cooperating with the roll 29 to project the latexed blanks forwardly, as hereinafter described.

As the shingled assembly moves as above described, with its upper surface contacting the suction roll 29, the exposed flap or margin portions 4, 4 and 5, 5 on its lower surface are drawn along past an applying roller 32 which, as shown in Fig. 2, is continuously supplied with latex or other dry-adhesive substance in liquid form from a tank 33 through the medium of a transfer roller 34 and a doctor roll 35. The roller 32 preferably rotates in a direction opposite, at its zone of contact with the travelling assembly, to the direction of travel of said assembly and the action of this adhesive-coated roll 32 is to flow or paint onto the exposed blank surfaces a substantially continuous film of the solution. On account of the precurling, as hereinbefore described, of the margins 4, 4, as soon as each such margin moves past the roller 32, its edge separates from the adjacent coated area on the seal flap 5 of the same blank, thus overcoming any tendency of the deposited film to act as a bond at this stage between the margin 4 and the seal flap 5 of each blank of the still-shingled assembly. In other words, the individual folded blanks of such assembly will open up slightly at the extremities of their two folded portions, to break the adhesive film, and in this condition, the shingled assembly of blanks progressively leaves the periphery of suction roll 29 at the point where the rollers 31, 31 engage the side flaps 3, 3 of said blanks—resulting in a forward movement of the assembly toward other pairs of rollers 37, 37.

There are two such pairs of rollers 37, 37 (only one pair being shown in Fig. 2), the same being spaced apart axially so as to engage only with the side flanges 3, 3, thereby avoiding contact with the freshly-coated areas 4, 4 and 5, 5 of the blanks. Said rollers 37, 37 run at relatively high speed; their action, therefore, is to deshingle the blanks, i. e., to seize each successive foremost blank of the slowly moving assembly and project it, fold 16 foremost, at a speed sufficient to separate it (see d, Fig. 6) from the following blanks of the assembly. The accelerated forward motion imparted to each individual blank by the rollers 37, 37 delivers such blank into one of the adjacent open compartments 38 of an endless drier 39, the travel of the latter being so coordinated with the operation of rollers 37, 37 that a drier compartment 38 arrives opposite said rollers in time to receive each individual blank as it is separated from the shingled assembly and projected forwardly by said rollers. The endless drier 39, which may be carried to any desired height, thus handles the adhesive coated partly-folded blanks individually, said blanks as received by said drier being carried by the travel of said drier first upwardly and then downwardly, and at the end of their downward travel being individually withdrawn from the drier and subjected to folding operations, as hereinafter described, for manufacture into envelopes such as shown by Fig. 1.

In the drier 39, each compartment of which receives an individual blank, the upward blank travel occurs with the coated surfaces 4 and 5 facing downwardly, but this condition is reversed on the downwardly moving side of the drier, where the coated surfaces 4 and 5 face upwardly (see e, Fig. 6). By the time each blank arrives at the lower end of the downwardly moving side of the drier 39, the coated portions 6 and 7 of said blank will have dried sufficiently for the blank to be freely handled—the evaporation of the liquid from the coating being promoted, if desired, by inclosing the drier 39 in a suitable heating chamber, not shown. Thus the conversion of each dry-adhesive-coated blank, arriving at the discharge end of drier 39 in the partly-folded condition shown at e, Fig. 6, can be proceeded with, by the

employment of any suitable mechanism for transforming such blank, by appropriate creasing, gluing, and folding instrumentalities, into the envelope shown by Fig. 1. In Fig. 2, I have shown one way of so operating on the delivered blank (see *e*, Fig. 6) as to convert it into the envelope of Fig. 1; but my invention is not in any sense limited to this way of converting, or to the mechanism shown; the latter is merely illustrative.

As shown in Fig. 2, a suitable take-off drum **40** provides an elongate suction opening **41** which, in the clockwise rotation of said drum, will engage and seize the under or uncoated surface of the projecting flap portion **5** of each blank as it arrives at the lower end of drier **39**. The action of drum **40** draws the doubled or folded blank out of the drier toward a blade **42**, the inner edge of which is contacted by the inside surface of portion **2** and margin **4** so that, as drum **40** pulls the blank downwardly onto a belt **43** that partly encircles said drum, the previously-folded back portion **2** is unfolded (see *f*, Fig. 6)—and in this condition the blank, after release of the suction of opening **41** at or near the point where the belt **43** leaves the drum **40**, is delivered to a pair of rollers **44, 44**, which project it flatwise and outside face uppermost (see *g*, Fig. 6) onto a suitable set of gage tab'e belts **45**, where it comes to rest against suitable stops or gages **46**.

In this condition, the extended blank is centered and squared against the gages **46** by the action of the belts **45** and, if need be, by the action of a revolving brush **47**, the blank being prevented from buckling by suitable overhead rails or skids **48**. In this position, the margin **4** of the blank overlies a clockwise rotating cylinder **49**, the periphery of which provides a suitable gripper **50**, extending longitudinally of said cylinder and with which cooperates a suitable tucker blade **51** carried by a rotary arm **52** above the blank. The blade **51** in its counterclockwise rotation engages the coated margin **4** and tucks or folds it into said gripper **50**, forming thereby (see *h*, Fig. 6) the crease **53** (Fig. 1*a*) which disposes the coated area **6** on the inside of flap **4**. The gripper **50**, by the rotation of cylinder **49**, carries the blank around (see *i*, Fig. 6) and delivers it, inside surface uppermost, onto folding station belts **54**—the usual means, not shown, being employed to effect the release of crease or fold **53** by gripper **50** as the belts **54** are engaged. In this travel around cylinder **49**, the extended side flaps **3, 3** of the blank are preferably coated with ordinary wet glue, by means of a pair of suitable gluing ro'lers **55** (only one being shown) which receive the glue from a transfer roller **56**, running in a suitable receptacle **57**.

On the belts **54**, each extended blank, inside surface uppermost, (see *i*, Fig. 6), and with its side flaps **3, 3** wet with glue on the underside, is conveyed, fold **53** foremost, to folding instrumentalities of substantially the construction and mode of operation shown by Novick Patent No. 1,298,776, April 1, 1919, for the folding up and over of said side flaps **3, 3** and for the refolding, on line **16**, of back portion **2** so that the latter will over'ap and adhere to the glue-coated surfaces of the inturned side flaps. A detailed showing and description of said folding instrumentalities is unnecessary, since the same per se form no part of the present invention.

It is sufficient to note that such folding mechanism includes a pair of centering stops or gages **58, 58** (only one being shown), which are engaged by the reentrant angle portions **59, 59** of each blank received and conveyed on the belts **54**—this engagement serving to bring the blank to rest upon a table or support **60** and beneath a suitable forming plate **61**, beyond which projects the blank's back portion **2**. Cooperating with the forming plate **61** are a pair of folding devices **62, 62** (only one being shown), the latter operating, as described in the aforesaid Novick patent (see Fig. 4 of Novick) to fold the side flaps **3, 3** inwardly over the edges of said forming plate, (see *j*, Fig. 6); after this, an oscillatory drum **63**, carrying rotating rollers **64** and **65**, moves clockwise to engage the blank portion **2** from beneath and to refold it, on line **16**, over the forward edge of plate **61**. The fold **16** is thus seized between the rollers **64** and **65**, whose rotation strips or withdraws the blank from plate **61**, producing at the same time the requisite pressure to firmly stick the back portion **2** to the glue-coated side flaps **3, 3**. As the drum **63** makes its return or counter-clockwise swing to the position shown in Fig. 2, the thus-formed envelope (see *j*, Fig. 6), folded except for its seal flap **5**, is projected by the rollers **64** and **65** into other cooperating rollers **66, 66** which feed it, fold **16** foremost, onto belts **67**. Here, as brought to rest beneath a forming plate **68** by a suitable stop **69**, the operation of folding down the seal flap **5** is performed; for this purpose, an oscillatory drum **70**, carrying rotating rollers **71** and **72**, operates in the same way as drum **63** to fold the seal flap **5** over the edge of plate **68**, after which the fold **73** thus formed (see *l*, Fig. 6) is seized by said rollers which, on the clockwise or return swing of drum **70**, project the completed envelope, fold **73** foremost, into a chute **74** delivering to any suitable stacking and counting mechanism **75** (see *m*, Fig. 6).

Fig. 5 illustrates a somewhat different apparatus from that shown in Fig. 2 for applying the dry-adhesive substance in liquid form to the exposed surfaces **4** and **5** on the underside of the travelling shingled assembly of partly-folded blanks (see *c*, Fig. 6). The shingling rollers **23, 23'** and the suction roller **29** operate, in the same manner as previously described, to form the shingled assembly, and to advance the same progressively, with its upper surface held by suction to the periphery of roller **29**. However, the application of the coating solution to the exposed areas on the underside of the shingled assembly is effected in this instance by spraying—the coating solution being supplied from a suitable container **76** to a receptacle **77**, from which latter leads a tube **78** that delivers the solution in a regulated amount into the path of a jet of compressed air supplied, for example, by a pipe **79**. The air atomizes the solution and the mixture is discharged through a suitable nozzle **80** against the underneath exposed areas **4** and **5** of the shingled assembly of blanks; thereafter the individual blanks separated from said assembly are dried, handled and folded in the same manner as heretofore described in connection with Fig. 2. Preferably, as shown in Fig. 5, the nozzle **80** is surrounded by a suitable casing **81**, arranged to catch any drip or excess of the sprayed-on coating solution.

Figs. 7 and 8 illustrate a somewhat different type of mechanism for the manufacture, according to my invention, of dry-sealing envelopes of the type, for example, shown by Fig. 1. Referring to Fig. 7, the machine frame provides a support **82** whereon the blanks are stacked, inside faces up-

permost, but in this instance, with their seal flaps 5, 5 toward the lower edge of the stack, as shown at *a'*, Fig. 9. Suitable posts 83, rising from the support 82, maintain the stack in position, with the marginal portions 4, 4 of the blanks overlying a supporting ledge 84.

Adjacent the ledge 84, the support 82 provides an opening 85 to afford access to the lowermost blank of suitable withdrawing devices, here shown as of conventional form and embodying a hollow oscillatory suction arm 86 which operates in timed relation to the clockwise rotation of a drum 87, the latter having a suitable gap 88 in its periphery. Cooperating with drum 87 are the rollers 89 and 90, the former mounted substantially in the opening 85, and the latter mounted below the drum 87, there being preferably between said rollers a stationary curved guide 91, conforming to but spaced from said drum's periphery. The operation of such blank-withdrawing mechanism is substantially as follows:

As the free end of suction arm 86 moves into the opening 85, the suction becomes effective to seize the lowermost blank, and then on the withdrawal movement of arm 86, the marginal portion 4 of such blank is forcibly drawn past ledge 84 and moves downwardly into gap 88 of drum 87, said gap at this instant being substantially opposite the roller 89. As the rear or trailing edge of gap 88 comes into opposition to the roller 89, the suction through arm 86 is released, this transferring the control of the seized end of the blank to the drum 87 and the roller 89, which elements, by the continued rotation of drum 87, draw or pull the blank from the stack, around roller 89, and with the aid of guide 91 direct its marginal portion 4 toward the lower roller 90, (see *b'*, Fig. 9).

Said roller 90 cooperates with the drum 87 in projecting such withdrawn blank (see *c'*, Fig. 9) substantially horizontally onto suitable skids 92, constituting a table whereon each blank comes to rest in a flat or extended position, and whereon said blank is subject to the action of joggers 93, or the like, which engage the reentrant corners 59*a*, 59*a* (Fig. 1*b*) to center and square said blank in advance of the action of folding devices, now to be described.

Each blank, as it arrives flatwise with its inside face uppermost on the support 92, has its forward marginal portion 4 projecting slightly beyond the edge 94 of said support. A pivoted arm 95, having a downwardly extending hook portion 96 at its free end, is arranged to operate in timed relation to the arrival of each blank on the support 92, said arm moving downwardly to bend the marginal portion 4 over edge 94 and to pinch it frictionally between said edge and the hook 96. With its marginal portion 4 so pinched, the blank is then acted upon by a descending transverse blade 97, the latter being carried by a reciprocatory head 98, which, through a suitable bell crank connection 99, is actuated from a rotating cam 100. The head 98 also preferably carries beyond the blade 97 a pair of gage elements 101, the latter, as said head descends, adapted to engage the other reentrant corners 59, 59 of the blank, thereby to insure the accurate alinement with blade 97 of the inner boundary of back portion 2, i. e., the transverse line of fold 16 which is produced when the blade 97 engages the blank and tucks it into the bight of a pair of rapidly running rollers 102, 102 which occupy a suitable transverse gap 103 in the supporting surface 92. As the blank is thus folded and simultaneously removed from support 92, its marginal portion 4 is drawn over the edge 94, and because of the restraint imposed by hook 96 has imparted thereto a definite curl, in all respects similar to the curl produced by the mechanism of Fig. 2, this curl persisting in the blank material notwithstanding its being temporarily flattened out by passage between the rollers 102, 102 and the subsequent rollers 104, 104 which deliver the thus-prefolded and precurled blank (see *d*, Fig. 9) to the adhesive-applying instrumentalities now to be described.

The adhesive-applying mechanism in the present instance embodies a suitable shingling and conveying means for the succession of folded blanks projected downwardly by rolls 102 and 104, said shingling and conveying means being here shown as a wide endless belt 105, which is driven by a drum 106 and which passes around the rollers 107, 108 and 109. The rollers 107 and 109 rotate on fixed axes, but the roller 108 is preferably made adjustable, for take-up purposes. The drum 106 consists of two spaced portions (only one being shown) which engage the opposite edges of the belt 105, the latter on its inner surface substantially contacting with a curved guide or support 110 which substantially conforms to and is suitably spaced from the belt engaging portions of drum 106. Said drum has a very slow rotation by comparison with that of the rollers 102 and 104; the surface speed ratio is such as to slow down the blank travel on belt 105 and around drum 106 to such an extent that shingling or stepping in the manner indicated by *e'*, Fig. 9, is obtained—i. e., each blank overtakes the preceding blank to such an extent that the only areas on each blank exposed on the slow-moving shingled assembly are the alternating adjacent blank areas 4 and 5. Such areas are exposed to latex or other dry-adhesive substance in liquid form contained in a suitable elongated receptacle 111 positioned between the two drum portions 106, the open lower end of said receptacle allowing the coating liquid to flow in a film over the exposed areas 4 and 5 of the shingled blank assembly as the latter is moved by the belt beneath said receptacle, with the drum portions 106, 106 engaging the side flaps 3, 3.

On account of the precurling, as hereinbefore described, of the marginal 4, 4, each of the latter, as soon as it passes beyond the receptacle 111, springs outwardly, its edge separating from the adjacent latexed area of the seal flap 5 of the same blank, thus overcoming any tendency of the adhesive film to stick the two coated areas 6 and 7 together. In this condition, the shingled assembly of prefolded blanks is moved gradually around the lower half of drum 106, between said drum and the belt 105—the advancing end of said assembly leaving the drum at roller 109 where a suitable drying chain 112, running at a slightly higher speed than the belt or apron 105, is operative, as hereinafter described, to pick off individually from the upwardly moving assembly the successive foremost folded blanks thereof arriving at said chain, said blanks being guided against said chain by a suitably inclined skid or guide 113.

The drying chain 112 is moved intermittently or step by step from a suitable drive shaft 114, the latter providing an eccentric connection 115 for operation of a pawl and ratchet drive 116 applied to a sprocket 117 around which the chain 112 passes. By means of a link connection 118, a similar pawl and ratchet drive 119 is operated,

for another driving sprocket 120 of said chain. Between the driving sprockets 117 and 120, the chain 112 may pass over an idler sprocket, not shown, made adjustable for tightening purposes; the chain travel is upward from sprocket 120 to any desired height, it being understood that the chain at such elevated point passes over and around a suitable sprocket, not shown, and thence downwardly to the driving sprocket 117. The chain 112 is preferably of the link construction shown by Figs. 10 and 11; at appropriate intervals, the chain links 121 are equipped with blocks 122, to which are attached suitable spring clips 123 having apertures for the imprisonment of balls 124 that are frictionally pressed against the blocks 122. Each chain link so equipped, as it comes momentarily to rest after rounding the sprocket 120, has directed against it by guide 113 the fold 16 of the foremost blank of the shingled assembly emerging from between apron 105 and drum 106—the result being that such fold 16 is received, as shown in Fig. 10, between ball 124 and block 122, so that the ensuing chain movement will separate said blank from the assembly, the blank being moved upwardly by the chain while in the position shown by *f'*, Fig. 9.

Thus the prefolded blanks, coated with dry-adhesive substance in liquid form while in a shingled assembly, are dried individually or separately, being carried by chain 112 first upwardly and then downwardly—the position of each blank on the chain on the descending side thereof being indicated by Fig. 11 (see *g'*, Fig. 9). Each dried blank, near the lower end of the descending side of chain 112, is brought to rest with its seal flap portion 5 behind a bar 125, Fig. 8. In this position of the blank, with its portion 1 seized temporarily by a stationary vacuum device 126 substantially in the plane of chain 112, an oscillatory vacuum device 127 moves against the blank portion 2, and on its return movement draws down said portion 2 (see *h'*, Fig. 9) so that it makes an angle of approximately 90° with the blank portion 1. This movement carries the curled extremity 4 of blank portion 2 over a folding bar 128; instantly thereafter, with the chain 112 still at rest, a slasher bar 129 operates to make the fold 53, and then the bar 128, by a left hand movement, Fig. 8, strips the blank fold 16 from the chain clip and tucks the fold 53 into the bight of pinch rollers 130. By the latter, the extended blank, inside surface uppermost, is projected, fold 53 foremost, onto suitable belts 131 (see *i'*, Fig. 9), where oscillating gages 132 for cooperation with the reentrant angle portions 59, 59 may be employed to center and square the blank, preliminary to its movement on said belts 131 around the rollers or drums 133 and 134. In its travel around the last-named roller 134 (see *j'*, Fig. 9), the extended side flaps 3, 3 of the blank are preferably coated with ordinary wet glue by means of a pair of suitable gluing segments 135 (only one being shown), which receive the glue from a transfer roller 136, running in contact with a suitable roller 137 partially immersed in liquid glue contained in a receptacle 138. By said belts 131, each extended and thus-glued blank is finally projected into a folding box or station 139, where suitable folding instrumentalities, not shown, are first operative to turn over and down the freshly-glued side flaps 3, 3, and then to overlap upon the blank portion 2, by reestablishing therein the previously-formed fold 16. A detailed showing and description of said folding instrumentalities at box or station 139 is unnecessary, since the same per se form no part of the present invention; said folding instrumentalities may, if desired, be of substantially the same form and construction as shown by the aforesaid Novick Patent No. 1,298,776, dated April 1, 1919.

The envelope formed at 139, complete (see *k'*, Fig. 9) except for the folding down of its seal flap 5, is projected by pressure rollers 140 to suitable mechanism 141 for providing the seal flap fold 73, after which, by means of oscillating grippers 142, the completed envelope is transferred to a pusher plate 143, where the envelopes are stacked and counted with their flaps 4 and 5 at the top.

I claim:

1. In the manufacture of envelopes of the type adapted to be sealed by the contact of two complemental areas of dry-sealing adhesive, one on the closure flap and the other on the envelope's rear wall, the improvement which consists in so folding each envelope blank as to dispose contiguous to each other the two blank areas destined to receive such adhesive, and coating by a single application of such adhesive the said two areas of each blank.

2. In the manufacture of envelopes of the type adapted to be sealed by the contact of two complemental areas of dry-sealing adhesive, the improvement which consists in so folding each envelope blank as to dispose contiguous to each other the two blank areas destined to receive such adhesive, conveying the so-folded blanks in a shingled relation that exposes such two areas of each blank, and applying the adhesive progressively to said exposed blank areas, while the blanks are being so conveyed.

3. In the manufacture of envelopes of the type adapted to be sealed by the contact of two complemental areas of dry-sealing adhesive, the improvement which consists in so folding each envelope blank as to dispose contiguous to each other the two blank areas destined to receive such adhesive, coating by a single application of such adhesive the said two areas of each blank, simultaneously drying said adhesive-coated areas of each blank, and thereafter subjecting each blank to the gumming and folding operations required for its conversion into an envelope.

4. In a machine for making envelopes of the type adapted to be sealed by the contact of two complemental areas of dry-sealing adhesive, means for so folding each envelope blank as to dispose contiguous to each other the two areas destined to receive such adhesive, and means for subjecting each so-folded blank to a single application of such adhesive, for coating both said areas with said adhesive.

5. In a machine for making envelopes of the type adapted to be sealed by contact of two complemental areas of dry-sealing adhesive, means for folding each envelope blank so as to dispose contiguous to each other the two areas destined to receive such adhesive, means for conveying the so-folded blanks in a shingled relation that exposes such two areas of each blank, and means for applying such adhesive progressively to said exposed blank areas, while the blanks are being so conveyed.

6. A machine for making envelopes of the type adapted to be sealed by contact of two complemental areas of dry-sealing adhesive, comprising means for so folding each envelope blank as to

dispose contiguous to each other the two areas destined to receive such adhesive, means for procuring, at one application of such adhesive, the coating of both said blank areas, means for simultaneously drying said adhesive-coated areas of each blank, and means for thereafter subjecting each blank to the gumming and folding operations required for its conversion into an envelope.

7. In the manufacture of envelopes of the type adapted to be sealed by the contact of two complemental areas of dry-sealing adhesive, the improvement which consists in so folding each envelope blank as to dispose in stepped or shingled relation to each other the two blank areas destined to receive coatings of such adhesive, causing one said area at its edge to warp or curl away from the other area, and coating said two areas at one application with such adhesive.

8. In the manufacture of envelopes of the type adapted to be sealed by the contact of two complemental areas of dry-sealing adhesive, the improvement which consists in so folding each envelope blank as to dispose in stepped or shingled relation to each other the two blank areas destined to receive such adhesive, causing one said area at its edge to warp or curl away from the other area, coating said two areas by one application of such adhesive, and drying said adhesive-coated areas of each blank simultaneously, with the aforesaid warp or curl preventing any union of said areas during the drying of said adhesive.

9. In a machine for making envelopes of the type adapted to be sealed by the contact of two complemental areas of dry-sealing adhesive, means for pre-folding each envelope blank to dispose in shingled or stepped relation to each other the two blank areas destined to be coated with such adhesive, means for warping one of said areas, so as to separate it at its edge from the other area, and means for coating said two areas by a single application of such adhesive.

10. In a machine for making envelopes of the type adapted to be sealed by the contact of two complemental areas of dry-sealing adhesive, means for pre-folding each envelope blank to dispose in shingled or stepped relation to each other the two blank areas destined to be coated with such adhesive, means for warping one of said areas, so as to separate it at its edge from the other area, means for coating said two areas by a single application of such adhesive, and means for drying said adhesive-coated areas of each blank simultaneously, with breakage of any connecting adhesive film by the aforesaid warp or curl.

11. In the manufacture of envelopes of the type adapted to be sealed by the contact of two complemental areas of dry-sealing adhesive, the improvement which consists in so folding each envelope blank as to dispose in stepped or shingled relation to each other the two blank areas destined to receive such adhesive, coating said blank areas with such adhesive in solution while the blanks themselves are assembled in a shingled or stepped relation that exposes only such two areas of each blank, and drying such coated partly-folded blanks individually.

12. In a machine for making envelopes of the type adapted to be sealed by the contact of two complemental areas of dry-sealing adhesive, means for pre-folding each envelope blank to dispose in shingled or stepped relation to each other the two blank areas destined to be coated with such adhesive, means for coating said blank areas with such adhesive while the blanks themselves are assembled in a shingled or stepped relation that exposes only such two areas of each blank, and means for thereafter drying individually each so-coated partly-folded blank.

13. A machine for making envelopes of the type adapted to be sealed by the contact of two complemental areas of dry-sealing adhesive, comprising means for pre-folding each envelope blank to dispose in shingled or stepped relation to each other the two blank areas destined to be coated with such adhesive, means for coating said blank areas with such adhesive while the blanks themselves are assembled in a shingled or stepped relation that exposes only such two areas of each blank, means for thereafter drying individually each so-coated partly-folded blank, and means for thereafter subjecting each blank to the gumming and folding operations required for its conversion into an envelope.

14. In the manufacture of envelopes of the type adapted to be sealed by the contact of two complemental areas of dry-sealing adhesive, the improvement which consists in so folding each envelope blank as to dispose in stepped or shingled relation to each other the two blank areas destined to receive such adhesive, so shingling or stepping the so-folded blanks as to expose on one surface of the shingled assembly only the aforesaid two adjacent areas of each blank, applying such adhesive in solution to the said exposed areas of the shingled assembly, and drying the blanks individually.

15. In the manufacture of envelopes of the type adapted to be sealed by the contact of two complemental areas of dry-sealing adhesive, the improvement which consists in so folding each envelope blank as to dispose in stepped or shingled relation to each other the two blank areas destined to receive such adhesive, so shingling or stepping the so-folded blanks as to expose on one surface of the shingled assembly only the aforesaid two adjacent areas of each blank, applying such adhesive in solution to the said exposed areas of the shingled assembly, drying the blanks individually, and thereafter subjecting each blank to the gumming and folding operations required for its conversion into an envelope.

16. In the manufacture of envelopes of the type adapted to be sealed by the contact of a flap area and a body area both coated with a dry-sealing adhesive, the improvement which consists in so folding and stepping the blanks for such envelopes as to expose, in alternating relation to each other on one side of the stepped assembly, only said flap and body areas, and coating said exposed areas by a single continuous application with a solution of such adhesive.

17. In the manufacture of envelopes of the type adapted to be sealed by the contact of a flap area and a body area both coated with a dry-sealing adhesive, the improvement which consists in so folding and stepping the blanks for such envelopes as to expose, in alternating relation to each other on one side of the stepped assembly, only said flap and body areas, coating said exposed areas by a single continuous application with a solution of such adhesive, withdrawing the blanks one by one from said stepped assembly, and drying them individually.

18. In the manufacture of envelopes of the type adapted to be sealed by the contact of a flap area and a body area both coated with a dry-sealing adhesive, the improvement which consists

in so folding and stepping the blanks for such envelopes as to expose, in alternating relation to each other on one side of the stepped assembly, only said flap and body areas, coating said exposed areas by a single continuous application with a solution of such adhesive, withdrawing the blanks one by one from said stepped assembly, drying them individually, and thereafter subjecting each blank to the gumming and folding operations required for its conversion into an envelope.

19. In the manufacture of envelopes of the type adapted to be sealed by the contact of a flap area and a body area both coated with a dry-sealing adhesive, the improvement which consists in folding each blank to dispose contiguous to each other the aforesaid two areas, imparting to the body area a definite curl or warp away from the plane of the flap area, assembling the so-folded blanks in a stepped or shingled relation that exposes on one side thereof only such flap and body areas in alternating relation, coating such exposed areas at a single continuous operation with a solution of said adhesive and allowing the folded blanks to dry separately, thereby making said warp or curl of the body area effective in overcoming the bond or union between the two areas produced by such adhesive coating.

20. In a machine for making envelopes of the type adapted to be sealed by the contact of a flap area and a body area both coated with a dry-sealing adhesive, means for so folding and stepping the blanks for such envelopes as to expose, in alternating relation to each other on one side of the stepped assembly, only such flap and body areas, means for conveying the stepped assembly of folded blanks, means for applying such adhesive progressively to such exposed flap and body areas while the blanks are being so conveyed, and means for withdrawing the coated blanks one by one from said stepped assembly and for drying them individually.

21. In a machine for making envelopes of the type adapted to be sealed by the contact of two complemental areas of dry-sealing adhesive, means for applying such adhesive to said areas, with each blank so folded as to make said areas contiguous, means responsive to such folding for imparting a set to the blank material, thereby to prevent such adhesive-coated areas of each so-folded blank from adhering to each other during the drying of said adhesive, means for unfolding each blank after such drying, and means for thereafter subjecting each blank to the gumming and folding operations required for its conversion into an envelope.

22. In a machine for making envelopes of the type adapted to be sealed by the contact of two complemental areas of dry-sealing adhesive, means for coating with such adhesive the said two areas of envelope blanks, each so folded as to make said areas contiguous, means for drying each adhesive-coated blank, means to warp the material of each blank, thereby to prevent the two said areas of each blank from sticking together while the blank is drying, and means for thereafter subjecting each dried blank to the gumming and folding operations required for its conversion into an envelope.

23. In a machine for making envelopes of the type adapted to be sealed by the contact of two complemental areas of dry-sealing adhesive, means for coating with such adhesive the two areas of envelope blanks, each folded so as to make said areas contiguous, whereby both areas are coated at a single application of said adhesive, and means operable on each blank previous to the coating of same for imparting a warp or curl to one of said areas, whereby during drying of each so-folded blank its two coated areas will be prevented from sticking together.

24. In the manufacture of envelopes of the type adapted to be sealed by the contact of two complemental areas of dry-sealing adhesive, one on the closure flap and the other on a rear wall flap, the improvement which consists in producing in each envelope blank the adjacent disposition of the two flap areas destined to be coated with such adhesive, and coating by a single application of such adhesive the said two flap areas.

25. In a machine for making envelopes of the type adapted to be sealed by the contact of two complemental areas of dry-sealing adhesive, means for feeding the envelope blanks, means operative on each blank to dispose adjacent each other the two blank areas destined to be coated with such adhesive, and means for coating at a single application of such adhesive the two said areas of each blank.

26. In a machine for making envelopes of the type adapted to be sealed by the contact of two complemental areas of dry-sealing adhesive, means for supporting a stack of the envelope blanks, means responsive to the withdrawal of each blank from said stack for imparting thereto a transverse fold for disposing adjacent to each other the two blank areas destined to receive such adhesive, and means for coating at a single application of such adhesive the two said areas of each blank.

27. In a machine for making envelopes of the type adapted to be sealed by the contact of two complemental areas of dry-sealing adhesive, means for supporting a stack of the envelope blanks, means for withdrawing blanks one by one from said stack, means made operative by each blank's withdrawal for warping or curling one of the blank areas destined to receive such adhesive, means operative on each blank so withdrawn to dispose adjacent to each other the two blank areas destined to receive such adhesive, means for coating at a single application of such adhesive the two said areas of each blank, and means for so drying each so-coated blank that said warping or curling becomes effective to prevent sticking together of said two areas by such adhesive.

28. In a machine for making envelopes of the type adapted to be sealed by the contact of two complemental areas of dry-sealing adhesive, means for feeding the envelope blanks, a support on which each blank so fed is arrested, means operative on each blank so arrested for imparting thereto a transverse fold which disposes adjacent to each other the two blank areas destined to receive such adhesive, and means for coating at a single application of such adhesive the two said areas of each blank.

29. In a machine for making envelopes of the type adapted to be sealed by the contact of two complemental areas of dry-sealing adhesive, means for feeding the envelope blanks, a support on which said blank so fed is arrested, means operative on each blank so arrested for imparting thereto a transverse fold and for discharging said blank, fold foremost, from said support, said fold disposing adjacent to each other the two blank areas destined to receive such adhesive, means made operative by each blank's withdrawal from said support for warping or curling the margin

of one of said areas, means for coating at a single application of such adhesive the two said areas of each blank, and means for drying each coated so-folded blank, with said warp or curl effective to prevent the sticking together of said adjacent coated areas.

30. In a machine for making envelopes of the type adapted to be sealed by the contact of two complemental areas of dry-sealing adhesive, means for so folding each envelope blank as to dispose contiguous to each other the two blank areas destined to be coated with such adhesive, means for coating at a single application of such adhesive the two said blank areas, a drier for the coated so-folded blanks, and means responsive to the withdrawal of each blank from said drier for unfolding said blank.

31. In a machine for making envelopes of the type adapted to be sealed by the contact of a flap area and a body area both coated with a dry-sealing adhesive, means for so folding each blank as to make said areas adjacent, means for coating at a single application of such adhesive said two adjacent blank areas, means for unfolding each blank, after the coated areas thereof have dried, means for subjecting each unfolded blank to the gumming and folding operations required for its conversion into an envelope, and means for imparting a fold to said adhesive-coated body area.

32. In a machine for making envelopes of the type adapted to be sealed by the contact of a flap area and a body area both coated with a dry-sealing adhesive, means for so folding each envelope blank as to make said areas adjacent, means for coating at a single application of said adhesive the two said areas of each blank, means for unfolding each blank and for simultaneously imparting a fold to said coated body area, and means for thereafter subjecting each blank to the gumming and folding operations required for its conversion into an envelope.

33. In the manufacture of envelopes of the type adapted to be sealed by the contact of two complemental areas of dry-sealing adhesive, the improvement which consists in so folding the material of each envelope as to dispose contiguous to each other the two areas destined to receive such adhesive, conveying the so-folded envelopes or blanks in a shingled relation that exposes only such two areas of each, and applying the adhesive progressively to said exposed areas, while the envelopes or blanks are being so conveyed.

34. In a machine for making envelopes of the type adapted to be sealed by the contact of two complemental areas of dry-sealing adhesive, means for so folding the material of each envelope as to dispose contiguous to each other the two areas destined to receive such adhesive, and means for subjecting each so-folded envelope or blank to a single application of such adhesive, for coating both of said areas with said adhesive.

35. In a machine for making envelopes of the type adapted to be sealed by contact of two complemental areas of dry-sealing adhesive, means for folding the material of each envelope so as to dispose contiguous to each other the two areas destined to receive such adhesive, means for conveying the so-folded envelopes or blanks in a shingled relation that exposes only two such areas of each, and means for applying such adhesive progressively to said exposed areas, while the envelopes or blanks are being so conveyed.

36. In the manufacture of envelopes of the type adapted to be sealed by the contact of two complemental areas of dry-sealing adhesive, the improvement which consists in so folding the material of each envelope as to dispose in stepped or shingled relation to each other the two areas destined to receive such adhesive, coating said areas with such adhesive in solution while the envelopes or blanks themselves are assembled in a shingled or stepped relation that exposes only such two areas of each, and thereafter drying such so-coated envelopes or blanks.

37. In the manufacture of envelopes of the type adapted to be sealed by the contact of two complemental areas of dry-sealing adhesive, the improvement which consists in so folding the material of each envelope as to dispose in stepped or shingled relation to each other the two areas destined to receive such adhesive, so shingling or stepping the so-folded envelopes or blanks as to expose on one surface of the shingled assembly only the aforesaid two adjacent areas of each, applying such adhesive in solution to the said exposed areas of the shingled assembly, and thereafter drying such coated envelopes or blanks.

38. For envelopes adapted to be sealed by contact of two complemental dry-sealing adhesive areas, one on a closure flap and the other on a rear wall flap, both of which flaps, for the packing of such envelopes, being foldable downwardly to prevent exposure of said areas, the improvement in manufacture which consists in feeding such envelopes or their blanks, each with its two said flap portions in extended and unfolded position and adjacent to each other, and during said feeding applying such dry-sealing adhesive substantially simultaneously to the exposed surfaces of said two flap portions of each envelope or blank.

39. For envelopes adapted to be sealed by the contact of two complemental areas of dry-sealing adhesive, one on the closure flap and the other on a rear wall flap, the improvement in manufacture which consists in procuring initially, before application of such adhesive, the side-by-side disposal of said flap portions, and then applying such adhesive transversely and substantially simultaneously to both of said flap portions.

40. In machinery for the manufacture of envelopes adapted to be sealed by contact of two complemental dry-sealing adhesive areas, one on the envelope's closure flap and the other on a rear wall flap, the combination with means for feeding such envelopes or their blanks, each with its two said flap portions in extended unfolded position and adjacent to each other, of means operable during such feeding for applying dry-sealing adhesive substantially simultaneously to the exposed surfaces of said two flap portions of each envelope or blank.

41. In machinery for the manufacture of envelopes adapted to be sealed by the contact of two complemental dry-sealing adhesive areas, one on a closure flap and the other on a rear wall flap of each envelope, the combination with means for procuring, in advance of the application of such dry-sealing adhesive, the disposal of said two flap portions adjacent to each other, and means for thereafter applying such dry-sealing adhesive transversely and substantially simultaneously to both of said flap portions of each envelope.

VINCENT E. HEYWOOD.