M. M. CASSEL.

STOVE.

APPLICATION FILED MAR. 29, 1915.

1,151,662. Patented Aug. 31, 1915.

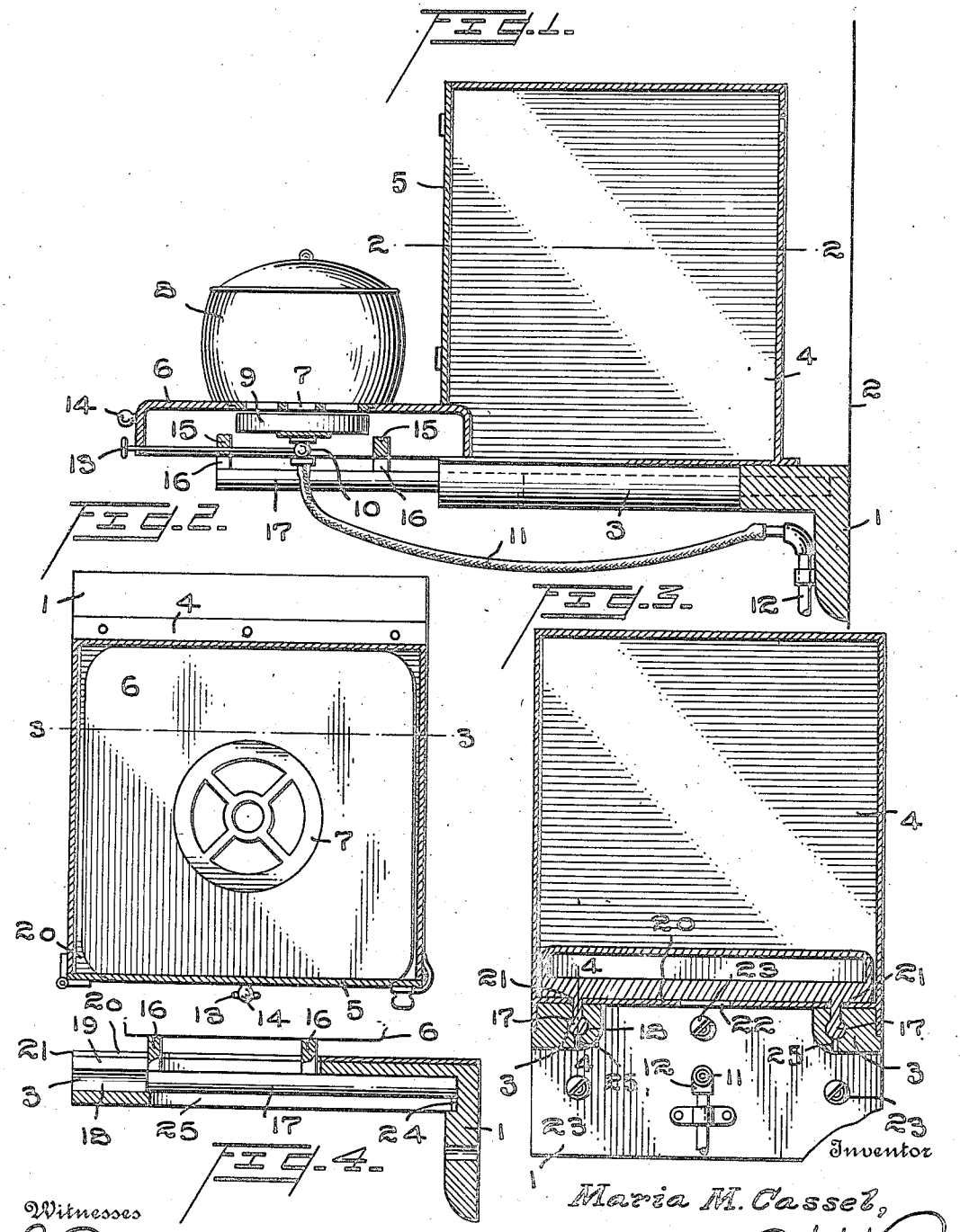

Witnesses

L. C. Moyer

C. R. Ziegler.

Inventor

Maria M. Cassel,

By Joshua R. H. Potts

Attorney

UNITED STATES PATENT OFFICE.

MARIA M. CASSEL, OF NORRISTOWN, PENNSYLVANIA.

STOVE.

1,151,662. Specification of Letters Patent. Patented Aug. 31, 1915.

Application filed March 29, 1915. Serial No. 17,774.

To all whom it may concern:

Be it known that I, MARIA M. CASSEL, a citizen of the United States, residing at Norristown, in the county of Montgomery and State of Pennsylvania, have invented certain new and useful Improvements in Stoves, of which the following is a specification.

My invention relates to improvements in stoves, and more particularly to an improved gas stove comprising an oven, and a movable burner support adapted to be positioned either inside or outside of the oven, and utilized for cooking purposes in either position.

A further object is to provide a stove of the character stated which economizes space, and is particularly adapted for use in small housekeeping rooms or apartments, where the matter of space is an extremely important one.

A further object is to provide a stove of the character stated which may be manufactured and sold at a reasonably low price, and which will be neat and attractive in appearance, strong and durable in use.

With these and other objects in view, the invention consists in certain novel features of construction and combinations and arrangements of parts as will be more fully hereinafter described and pointed out in the claims.

In the accompanying drawings, Figure 1 is a view in longitudinal section illustrating my improved stove showing the burner carrying plate in position outside of the oven. Fig. 2 is a view in horizontal section on the line 2—2 of Fig. 1, but showing the burner supporting plate located inside of the oven. Fig. 3 is a view in vertical section on the line 3—3 of Fig. 2, and Fig. 4 is a fragmentary view in longitudinal section on the line 4—4 of Fig. 3.

1 represents a relatively strong angle bracket which is adapted to be secured to a wall 2 or other support by means of screws 23 or other similar means, and which is provided with parallel horizontal arms 3 which support an oven 4.

The oven 4 is shown as a rectangular casing with a door 5 at the front, but I have not attempted to illustrate any particular construction of oven, as my improvements are adapted for use in connection with any well known type of oven structure, and I am not limited to any particular construction.

6 represents a burner supporting plate having a grid 7 on which a cooking utensil 8 may be positioned, and below the grid 7, a burner 9 is located having a valve 10 to control the flow of gas to the burner, and this valve 10 is connected by a flexible hose 11 with a gas supply pipe 12.

A valve operating handle 13 extends to the forward end of the plate 6, and a knob 14 is provided on the forward end of the plate to facilitate its movement. This plate 6, grid 7, burner 9, and other coöperating parts constitute an ordinary gas stove, but to distinguish the same from the oven, I shall hereinafter refer to this structure as a burner supporting plate, and this plate is adapted to move into and out of the oven as will now be explained.

The plate 6 with its coöperating parts is provided with transverse bars 15 connected by lugs 16 with horizontal rods 17. The rods 17 are mounted to slide in longitudinal guide openings 18 in the arms 3, and said arms are provided with longitudinal grooves 19 communicating with the openings 18 to accommodate the lugs 16, and allow the plate 6 to move into and out of the oven, and be rigidly supported in either position.

The oven bottom 20 is made with longitudinal slots 21 to accommodate the lugs 16, and is also provided with a slot 22 to accommodate the flexible hose 11 when the plate 6 is in the oven.

The door 5 of the oven terminates short of the bottom of the oven, so that the plate 6 can be readily moved into and out of the oven without opening the door.

The rods 17 are provided with pins 24 which move in slots 25 in the bottom of arms 3 to limit the outward movement of the burner plate 6 and prevent any possibility of the accidental disconnection of the latter from the bracket.

I would have it understood that my invention is not limited to any particular construction of oven or burner supporting plate, as I may construct these parts in various ways, and hence I do not limit myself to the precise details set forth, but consider myself at liberty to make such changes and alterations as fairly fall within the spirit and scope of the appended claims.

Having thus described my invention, what I claim as new and desire to secure by Letters Patent is:

1. The combination with a supporting

bracket having parallel horizontal arms, an oven supported on the bracket, rods mounted to telescope in the arms, and a burner supporting plate supported on the rods and movable into and out of the oven, substantially as described.

2. The combination with a support having parallel arms thereon, said arms having longitudinal openings, and grooves in their upper faces communicating with the openings, rods mounted to telescope in the openings and having upwardly projecting lugs movable in the grooves, an oven located on the support and having a door at its front terminating short of the bottom of the oven, and a burner supporting plate connected to the lugs and movable below the door into and out of the oven, substantially as described.

In testimony whereof I have signed my name to this specification in the presence of two subscribing witnesses.

MARIA M. CASSEL.

Witnesses:
MARIE JACKSON,
CHAS. E. POTTS.